May 24, 1966 R. J. EVANS 3,252,614

STACKABLE PAN

Filed Dec. 16, 1963 3 Sheets-Sheet 1

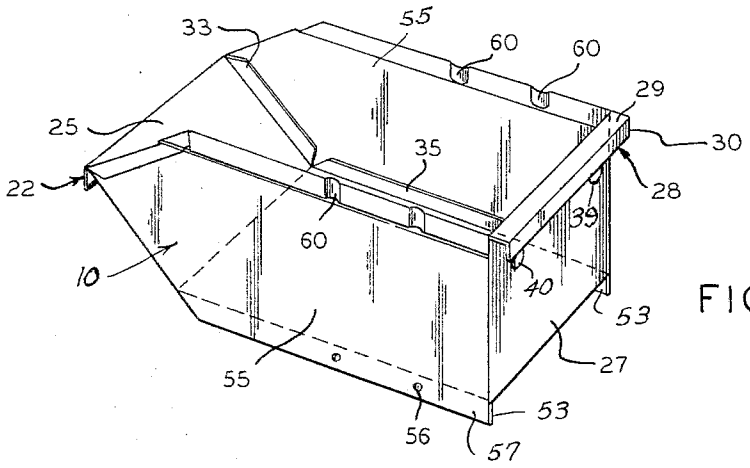

FIG. 1

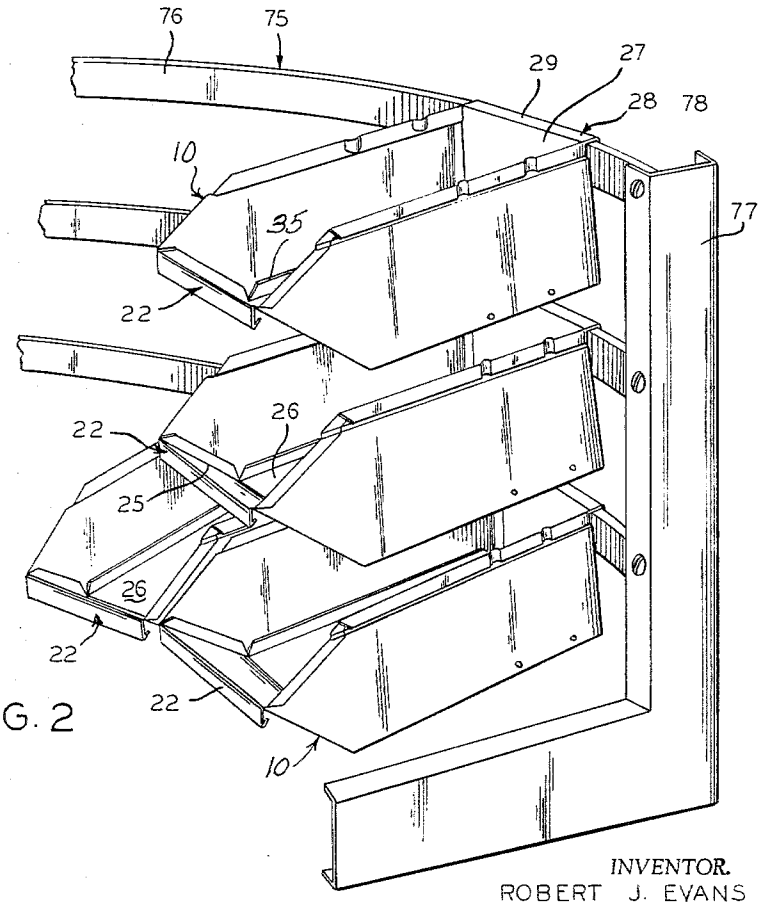

FIG. 2

INVENTOR.
ROBERT J. EVANS

BY

Hill, Sherman, Meroni, Gross & Simpson

ATTORNEYS

May 24, 1966 R. J. EVANS 3,252,614

STACKABLE PAN

Filed Dec. 16, 1963 3 Sheets-Sheet 2

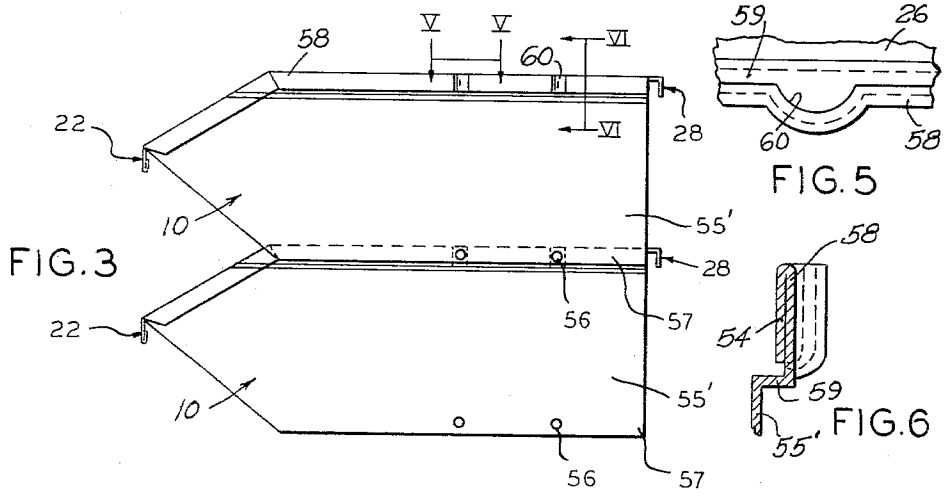

FIG. 3

FIG. 5

FIG. 6

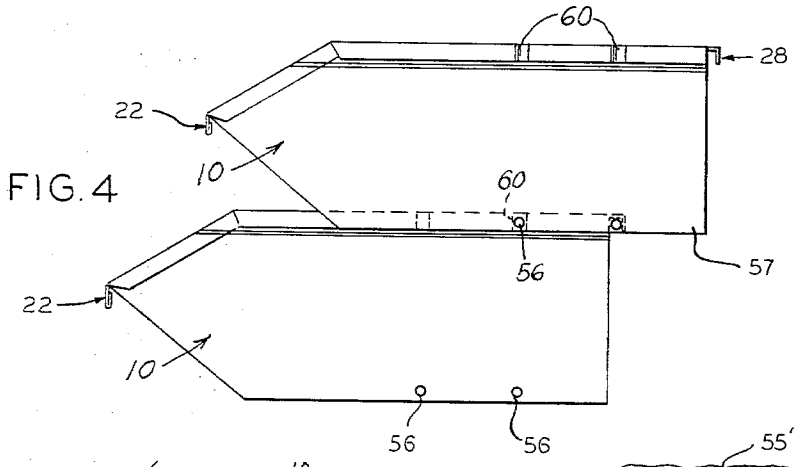

FIG. 4

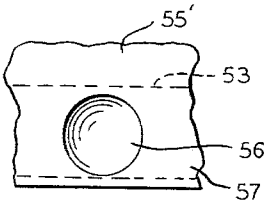

FIG. 7

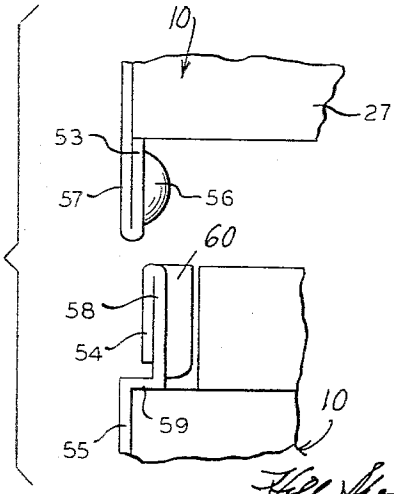

FIG. 8

INVENTOR.
ROBERT J. EVANS

BY

Hill, Sherman, Meroni, Gross & Simpson

ATTORNEYS

May 24, 1966 R. J. EVANS 3,252,614

STACKABLE PAN

Filed Dec. 16, 1963 3 Sheets-Sheet 3

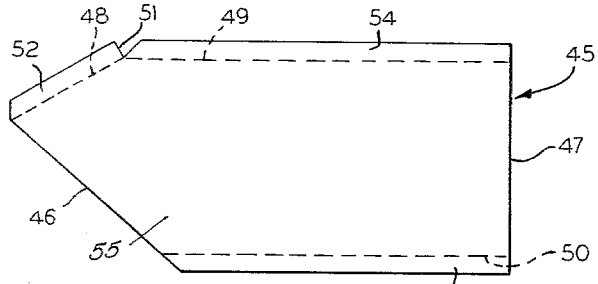

FIG. 9

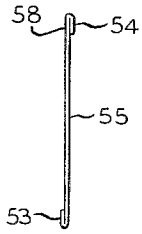

FIG. 10

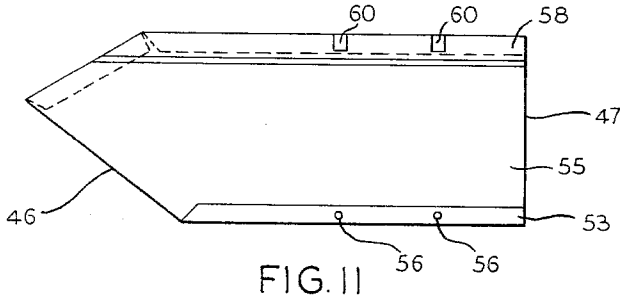

FIG. 11

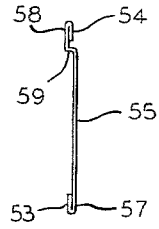

FIG. 12

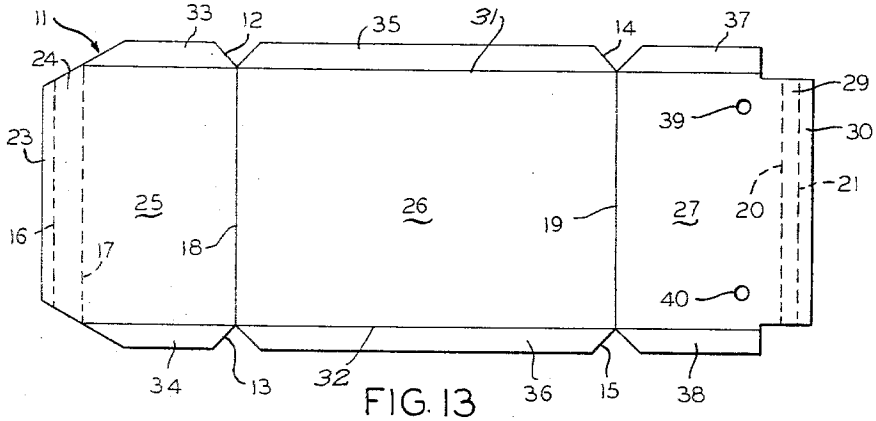

FIG. 13

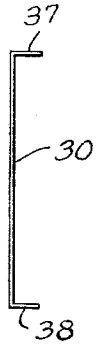

FIG. 14

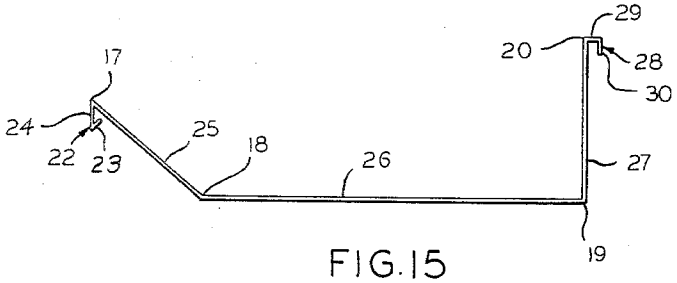

FIG. 15

INVENTOR.
ROBERT J. EVANS

BY

Hill, Sherman, Meroni, Gross & Simpson

ATTORNEYS

United States Patent Office 3,252,614 Patented May 24, 1966

3,252,614

STACKABLE PAN

Robert J. Evans, Aurora, Ill., assignor to Aurora Equipment Company, Aurora, Ill., a corporation of Illinois

Filed Dec. 16, 1963, Ser. No. 330,859
1 Claim. (Cl. 220—97)

The present invention relates generally to stackable pans or drawers and the method of manufacturing the same.

It is a primary object of this invention to provide a new and improved pan or drawer for parts which can be readily stacked on another similar unit in such a way that the drawer will not be readily displaced from its stacked position.

According to the present invention, each pan is provided with ledges along upper ends of its side walls for supporting another pan or bin thereon. Additional means is provided for locking or joining the bins so that when the bins are stacked longitudinal relative movement of the bins is prohibited. In order to facilitate stacking of the bins, lower ends of the side walls project below the bottom of the bin or pan and are adapted to engage upon the ledges of an underlying bin or pan. By insetting the ledges with respect to the vertical planes of the side walls, the bins or pans can be stacked in such a way that the side walls on the stacked bins are in vertical alignment. By constructing the side walls in this manner, rows of stacked bins can be disposed in close adjacency and in side-by-side relation.

According to still another important feature of this invention, the bins are provided with means which enable the bins to be locked in vertically staggered relation, if desired.

A still further object of this invention is to provide a stackable pan which can be suspended from a supporting rack, if desired.

Another and still further object of this invention is to provide a stackable pan which can be efficiently manufactured at a minimum of cost.

Other objects and features of this invention will more fully become apparent in view of the following detailed description taken in conjunction with the accompanying drawings illustrating therein a single embodiment and in which:

On the drawings:

FIGURE 1 is a perspectiye view of a stackable bin embodying important features of this invention;

FIGURE 2 is an enlarged fragmentary perspective view of a series of pans mounted on a supporting rack;

FIGURE 3 is a side view of a pair of stacked bins or pans;

FIGURE 4 is a side view similar to FIGURE 3 only illustrating the pans in stacked relation;

FIGURE 5 is an enlarged fragmentary edge view of a portion of the pan as seen when looking in the direction indicated by the arrows designated by the numerals V—V in FIGURE 3;

FIGURE 6 is an enlarged fragmentary vertical section as seen on the lines VI—VI looking in the direction indicated by the arrows;

FIGURE 7 is an enlarged fragmentary side view of a dimple on one side wall;

FIGURE 8 is an enlarged fragmentary exploded view of a pair of stackable pans illustrating how they are engaged together;

FIGURE 9 is a side view of a blank for forming one side wall;

FIGURE 10 is an edge view of the blank shown in FIGURE 9 only after the flanges have been folded into position;

FIGURE 11 is a side view of a side wall illustrating how the upper and lower margins are further processed;

FIGURE 12 is an end view of the side wall shown in FIGURE 11;

FIGURE 13 is a plan view of a blank for forming bottom and end portions of the bin or pan;

FIGURE 14 is an end view of the blank shown in FIGURE 13 only with the side flanges shown in a folded position; and

FIGURE 15 is a side elevation of the blank shown in FIGURE 13 only with the front and rear walls shown in folded relation to the bottom.

As shown on the drawings:

The reference numeral **10** refers generally to a stackable bin. The bin can be made from any suitable material such as sheet steel, aluminum, plastic and the like. The bin **10** is preferably manufactured from several flat pieces of material including a folded bottom strip **11** of material as shown in FIGURE 13. Where the bin **10** is to be made from sheet metal and the like, the bottom strip **11** is preferably notched to provide V-shaped notches **12–15**, inclusive. The strip **11** may be further processed by transversely scoring and folding or bending the metal at longitudinally spaced intervals as designated by the score lines **16–21**, inclusive, to form a series of bottom strip blank portions which are hereafter described.

At the forward end of the strip **11**, the score lines are closely spaced to enable a handle **22** to be formed from handle blank portions **23** and **24**. The fold line **18** serves to provide a line of demarcation between an inclined forward bin wall **25** with bin bottom **26**. A rear bin wall **27** is bent along fold line **19** and positioned at right angles with respect to the bin bottom **26**. The real wall of the bin **27** may be further processed to provide a hanger **28** by folding the material along the fold lines **20** and **21** to provide hanger legs **29** and **30** which are disposed in right angular relation to one another.

Prior to the folding of the bin blank **11** along the fold lines **16–21**, inclusive, the bin blank **11** may be further processed and folded along longitudinally extending fold lines **31** and **32** to provide a series of attachment flanges **33–38**, inclusive. In this regard, it will be noted that each of the blank portions **25**, **26** and **27** is provided with attachment flanges at the respective opposite margins of each. These attachment flanges are bent along the longitudinal fold lines **31** and **32** in right angular relation to the associated blank portion. The longitudinal fold lines **31** and **32** are extended across the vertex of the V-shaped notches so that the attachment flanges can be bent independently of one another into right angular relation with respect to the associated blank or wall portion.

Also provided on the rear wall **27** of the bin **10** are a series of hanger hook holes **39** and **40** as shown in FIGURE 13. These holes **39** and **40** can be used instead of the hanger **28** with suitable hooks for supending the bin from a rack or supporting structure **75** as shown in FIGURE 2.

In order to complete the bin **10**, side wall **55** and **55'** must be formed for attachment with the front, bottom and rear walls **25**, **26** and **27**. To this end, side wall blanks are cut as are illustrated at **45** in FIGURE 9. When the side wall blank **45** is cut to shape, it is provided with an inclined forward edge **46**, a rear wall edge **47**, a series of score or fold lines **48**, **49** and **50**, and a notched area at **51**. The material of the blank **45** is then folded along the fold lines **48**, **49** and **50** to form reinforcing side wall flaps or attachment flanges **52**, **53** and **54** disposed at opposite margins of the side wall **55**, to provide double thicknesses of material at upper and lower margins of the side walls **55** and **55'**. The flanges **52**, **53** and **54** on the side walls **55** and **55'** are turned in such a way that

the flanges **53** confront one another when the side walls **55** and **55'** are secured in assembly with the front, bottom and rear walls **25, 26** and **27** and so that the flanges **52** and **54** on the side walls **55** and **55'** face in a direction away from one another.

After the folding of the side wall flaps or flanges **52, 53** and **54**, the side walls **55** and **55'** are further processed to provide a series of dimples **56** disposed at longitudinally space intervals along lower ends **57, 57** of the side walls **55** and **55'**. These dimples or extensions are pressed out or formed from the material of the lower ends **57** and from the material of the flanges **53** and are disposed in confronting or opposing relation when the side walls are assembled with the front, bottom and rear walls of the bin. The side walls **55** and **55'** are further upset at upper ends **58** forming ledges **59, 59** with each ledge being disposed between one of the upper ends **58** and one of the side walls so that the side wall flap **54** overlies and vertically confront the ledge **59**.

The side walls **55** and **55'** are further processed to provide a series of longitudinally spaced recessed portions **60** for receipt of the extensions or dimples **56** to lock the bins **10, 10** when stacked in vertical relation with respect to one another. When the bins **10** are disposed in stacked relation, the lower ends **57** are adapted to be engaged and supported on the ledges **59** on the opposing side walls **55, 55'**. To attain this end, the ledges **59** must be of a sufficient length to support the thickness of the lower end **57** to be carried thereby. As shown in FIGURE 8, the ledge **59** has a length sufficient to support the side wall flap or flange **53** as well as the lower end **57** when the bins **10, 10** are stacked together.

Where it is desired that the bins **10, 10** be disposed in staggered relation with respect to one another, the forwardmost dimple **56** on the upper bin **10** is retainingly engaged with the rearwardmost recess **60** on the upper end of the underlying bin **10**, as shown in FIGURE 4. The bins **10** need not be disposed in staggered relation, but can be positioned in locked assembly in the manner illustrated in FIGURE 3, if desired.

After the side walls **55** and **55'** have been formed to shape, the side walls can be assembled with the front wall, bottom and rear walls **25, 26** and **27** by any suitable means such as the spot welding of the flanges **33, 34, 35, 36, 37** and **38** with opposing face areas of the side walls **55** and **55'**.

The bins **10** may also be mounted on the supporting structure or rack **75**. As illustrated, the rack **75** is comprised of a series of vertically spaced rails **76** supported between a pair of end stands **77**, with only one of the end stands being illustrated.

As illustrated, the bin **10** is provided with the hanger **28** as well as with the hanger holes **39** and **40** whereby the bin can be suspended from the rail **76** by means of the hanger **28** or the bin can be suspended by hanger hooks which project into the hanger holes **39** and **40**.

According to the method features of this invention, many of the steps for forming the stackable pan have already been described in detail. In summary, the stackable pan can be formed by cutting out the first blank **11** and by cutting out the notches **12, 13, 14** and **15** as shown in FIGURE 13. The blank **11** may then be folded along opposite margins along the fold lines **31** and **32** away from a central area of the blank **11** to form the attachment flaps **33–38**, inclusive. These flaps are disposed at right angles with respect to the associated front, bottom and rear walls **25, 26** and **27**. Thereafter, the blank **11** is transversely folded along the fold lines **18** and **19** to provide the front, bottom and rear walls **25, 26** and **27**. The side wall blanks illustrated at **45** in FIGURE 9 are

cut to shape and certain portions of the blank are folded along fold lines **48, 49** and **50** after the blank is notched at **51**. The folded portions are turned into side-by-side engagement with one side of the blank **45** and are not disposed in right angular relation with respect to the blank **45**. The side walls **55** are further processed by upsetting upper ends thereof to form ledges as shown at **59** in FIGURE 12. The ledges are of sufficient length and width to permit the lower ends of the side walls **57** to be carried thereby.

The opposite margins of the side walls **55** are further processed either before or after the ledges **59** are formed by striking out portions of the lower ends of the side walls to form the extensions or dimples **56**. The upper ends of the side walls **45** are further upset to form the recessed areas **60**. Where dimples are provided on the lower ends of the side walls, the recesses **60** are formed with an arcuate shape so that the dimples **56** can be snugly fitted therein to lock the bins **10** together when stacked on top of one another.

Although minor modifications might be suggested by those versed in the art, it should be understood that I wish to embody within the scope of the patent warranted hereon, all such modifications as reasonably and properly come within the scope of my contribution to the art.

I claim as my invention:

A stackable bin comprised of sheet material of essentially uniform thickness having a bottom and side walls with lower ends extending beneath the bottom, the bottom being joined with the side walls and overlying said lower ends, the side walls above said bottom having ledges extending inwardly towards one another overlying said bottom and with upper ends extending upwardly from inner ends of said ledges inset from vertical planes through said side walls, said upper and lower ends each comprising a double thickness of material, and means on said lower ends below said bottom and on said inset upper ends for joining the bin with other bins, said means on each of said lower ends comprising a pair of longitudinally spaced dimples formed from the material of the lower ends disposed along inside surfaces of said lower ends beneath said bottom, said means on each of said inset upper ends comprising a pair of longitudinally spaced recessed portions extended inwardly of said inset upper ends generally overlying said ledges providing recesses inset from the vertical planes through said side walls and with said recesses being shaped for receiving dimples on another bin therein when the bins are stacked, the dimples being sized and positioned for overlying ledges like said ledges when stacked and engaged with recesses like said recesses on another bin, one of said dimples on each of said lower ends being spaced equally from the other corresponding dimple and from a back edge of a corresponding one of said side walls to permit both staggered and vertical stacking of the bin with another bin.

References Cited by the Examiner

UNITED STATES PATENTS

459,697	9/1891	Atkinson	220—62
2,490,269	12/1949	Johnson	211—126
2,714,471	8/1955	Sherman	220—97

FOREIGN PATENTS

558,009	5/1958	Canada.
413,480	7/1934	Great Britain.

THERON E. CONDON, *Primary Examiner.*

GEORGE E. LOWRANCE, *Examiner.*