United States Patent [19]

Desbarats

[11] **Patent Number: Des. 307,272**

[45] **Date of Patent: ** Apr. 17, 1990**

[54] **TELEPHONE HANDSET**

[75] Inventor: **Guy E. Desbarats,** London, England

[73] Assignee: **British Telecommunications public limited company,** London, England

[**] Term: **14 Years**

[21] Appl. No.: **286,023**

[22] Filed: **Dec. 19, 1988**

[30] **Foreign Application Priority Data**

Jun. 22, 1988 [GB] United Kingdom 1051769

[52] **U.S. Cl.** **D14/148;** D14/248

[58] **Field of Search** D14/147, 142, 148, 248, D14/138; 379/433, 440, 436, 58, 59; 455/89, 90

[56] **References Cited**

U.S. PATENT DOCUMENTS

D. 190,867	7/1961	Mosing	D14/147
D. 264,465	5/1982	MacKenzie	D14/148
D. 265,733	8/1982	Fukastrima et al.	D14/148
D. 270,248	8/1983	Fukashima et al.	D14/148
D. 271,491	11/1983	Taylor	D14/148
D. 272,442	1/1984	Trussler	D14/147
D. 280,895	10/1985	Kao	D14/148
D. 280,986	10/1985	Kao	D14/147
D. 286,778	11/1986	Beaumont	D14/148
D. 299,137	12/1988	Soren et al.	D14/148
4,395,591	7/1983	Kaczkos	D14/142 X

Primary Examiner—Horace B. Fay, Jr.

Attorney, Agent, or Firm—Nixon & Vanderhye

[57] **CLAIM**

The ornamental design for a telephone handset, as shown and described.

DESCRIPTION

FIG. **1** is a front, top and left side perspective view of a telephone handset showing my new design;

FIG. **2** is a right side elevational view thereof;

FIG. **3** is a front end elevational view thereof;

FIG. **4** is a rear end elevational view thereof; and

FIG. **5** is a bottom plan view thereof.

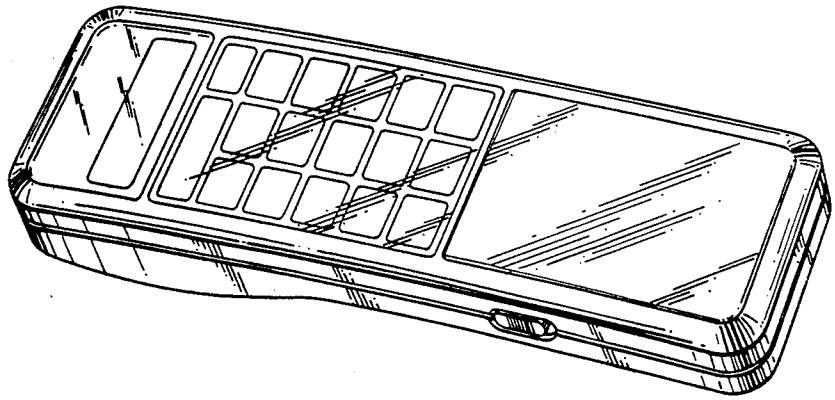



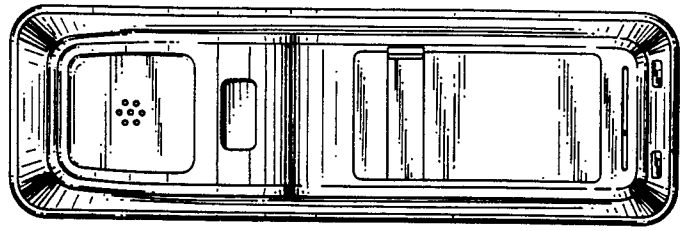

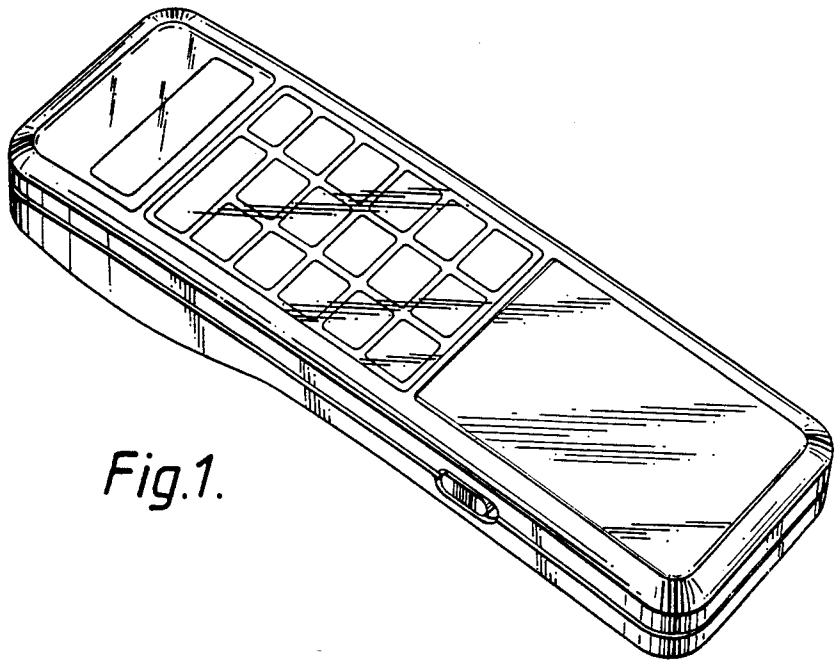

Fig.1.

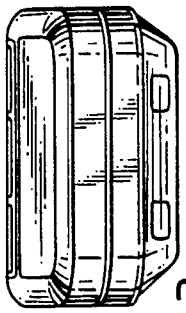

Fig.3.

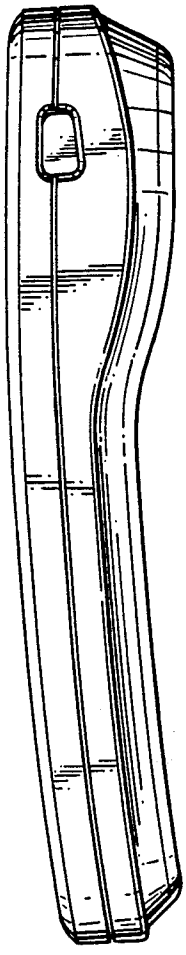

Fig.2.

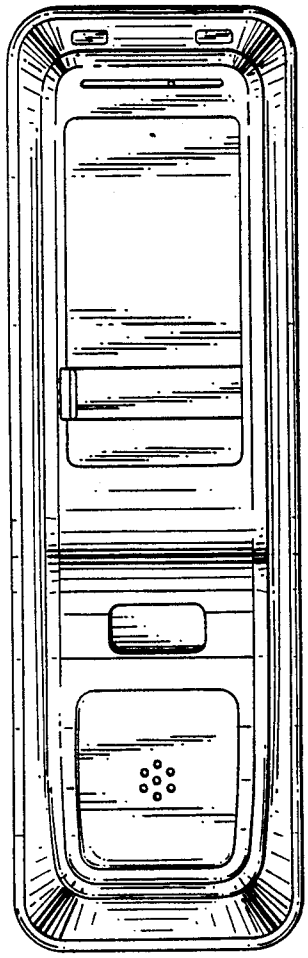

Fig.5.

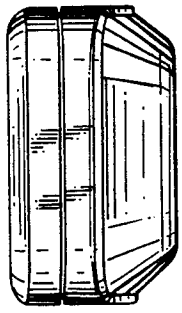

Fig.4.