(12) UK Patent Application (19) GB (11) 2 256 115 (13) A

(43) Date of A publication 25.11.1992

(21) Application No 9110580.9

(22) Date of filing 16.05.1991

(51) INT CL[5]
H04N 7/173, H04H 1/02

(52) UK CL (Edition K)
H4R RCSS R17D

(56) Documents cited
GB 2166328 A EP 0183871 A1
Innovative Aspects Of A Switched Star C.T.D.S By Daniel H. Smart 1987 NCTA Tech. Papers pgs. 27–35

(58) Field of search
UK CL (Edition K) H4R RCS RCSS
INT CL[5] H04H 1/02, H04N 7/173

(71) Applicant
Cabletime Limited

(Incorporated in the United Kingdom)

Newbury Business Park, London Road, Newbury, Berkshire, RG13 2PZ, United Kingdom

(72) Inventor
Leonard Graham Mann

(74) Agent and/or Address for Service
A A Thornton & Co
Northumberland House, 303–306 High Holborn, London, WC1V 7LE, United Kingdom

(54) Switched cable television networks

(57) In a switched cable television network where at least one channel is supplied to a subscriber at a dedicated frequency, the particular channel VHF1–4 being determined by an off-premise switch or converter SW1–4 in response to dynamic subscriber selections, the subscriber is enabled to control the selected channel from any of a plurality of spatially separated locations at his premises. This is done using a single home control unit 10 in association either with infra red receiver/ multiplexer units 15 connected to outlets 1–6 at each of the spatially separated locations (the outlets being connected to the home control unit by a coaxial cable 13), or with a mobile unit which communicates directly with the home control unit at radio frequencies. A plurality of independent selections may be made of channels to be supplied to the subscriber at a plurality of dedicated frequencies, (Figs. 5, 6, not shown), this selection facility also being exercisable at a plurality of spatially separated locations.

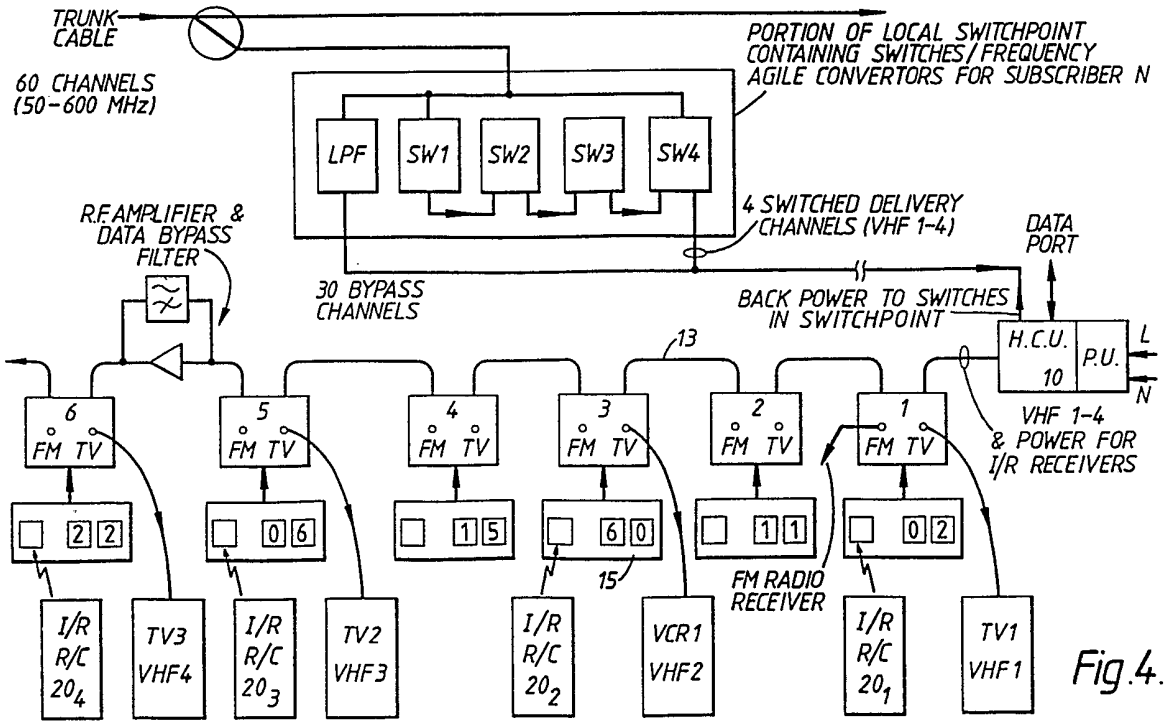

Fig.4.

GB 2 256 115 A

At least one drawing originally filed was informal and the print reproduced here is taken from a later filed formal copy.

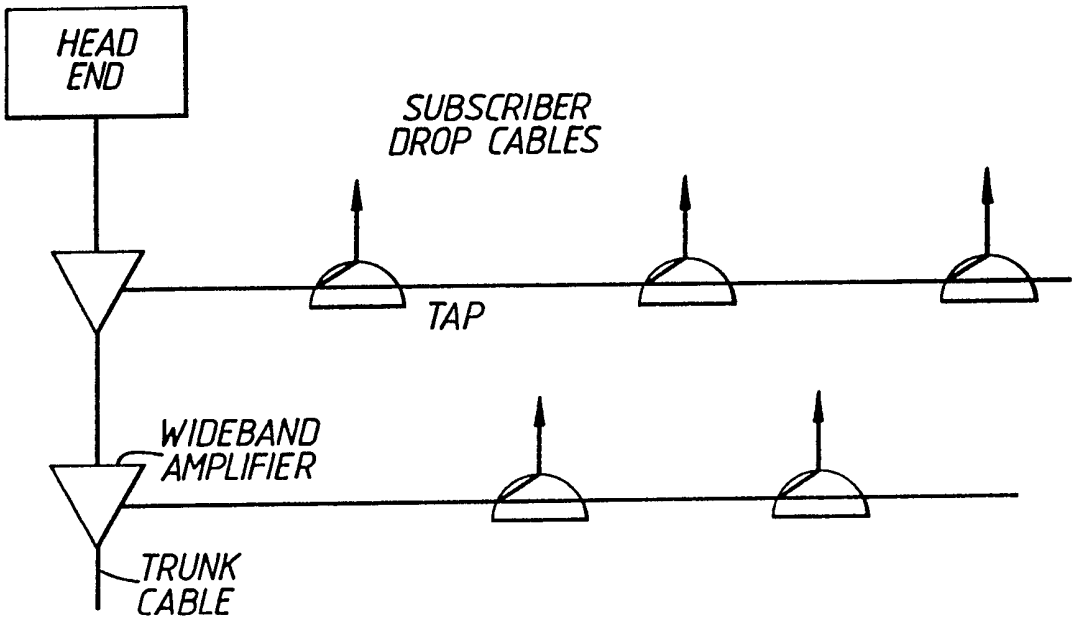
HEAD END
SUBSCRIBER DROP CABLES
TAP
WIDEBAND AMPLIFIER
TRUNK CABLE

Fig.1(a).

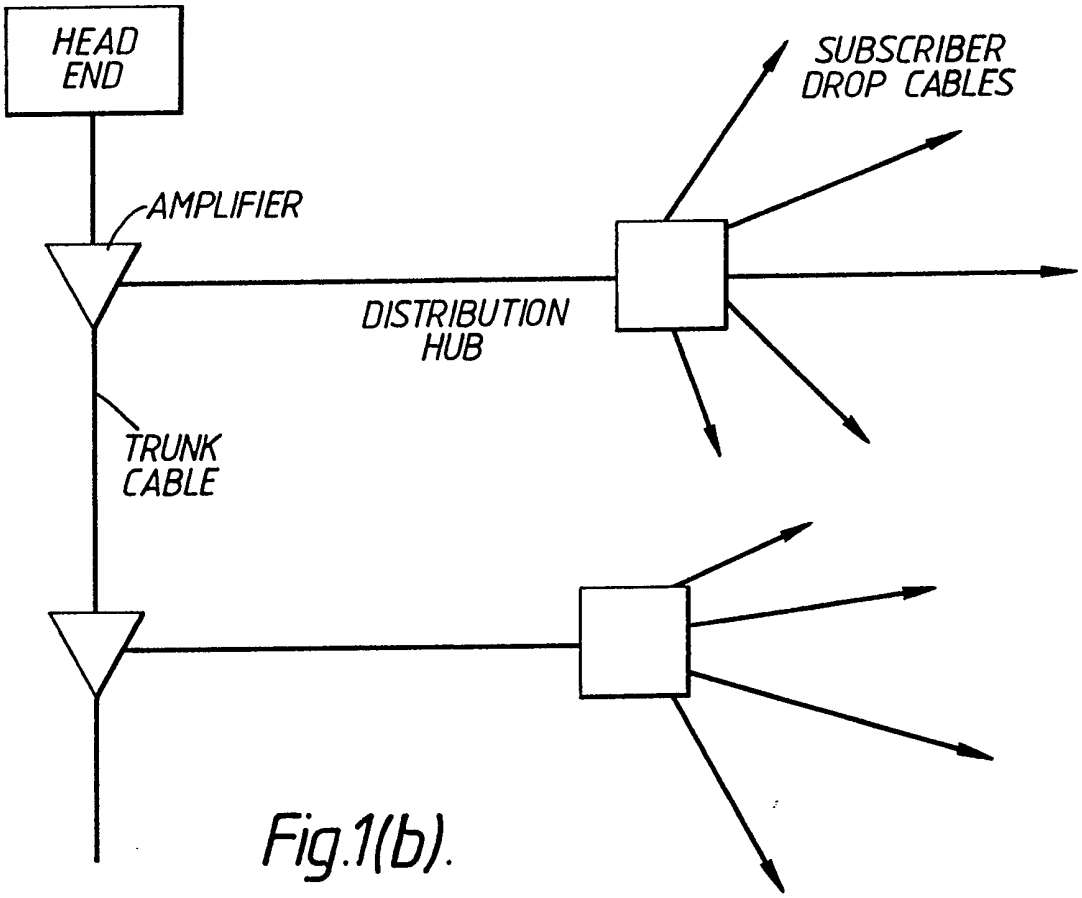
HEAD END
SUBSCRIBER DROP CABLES
AMPLIFIER
DISTRIBUTION HUB
TRUNK CABLE

Fig.1(b).

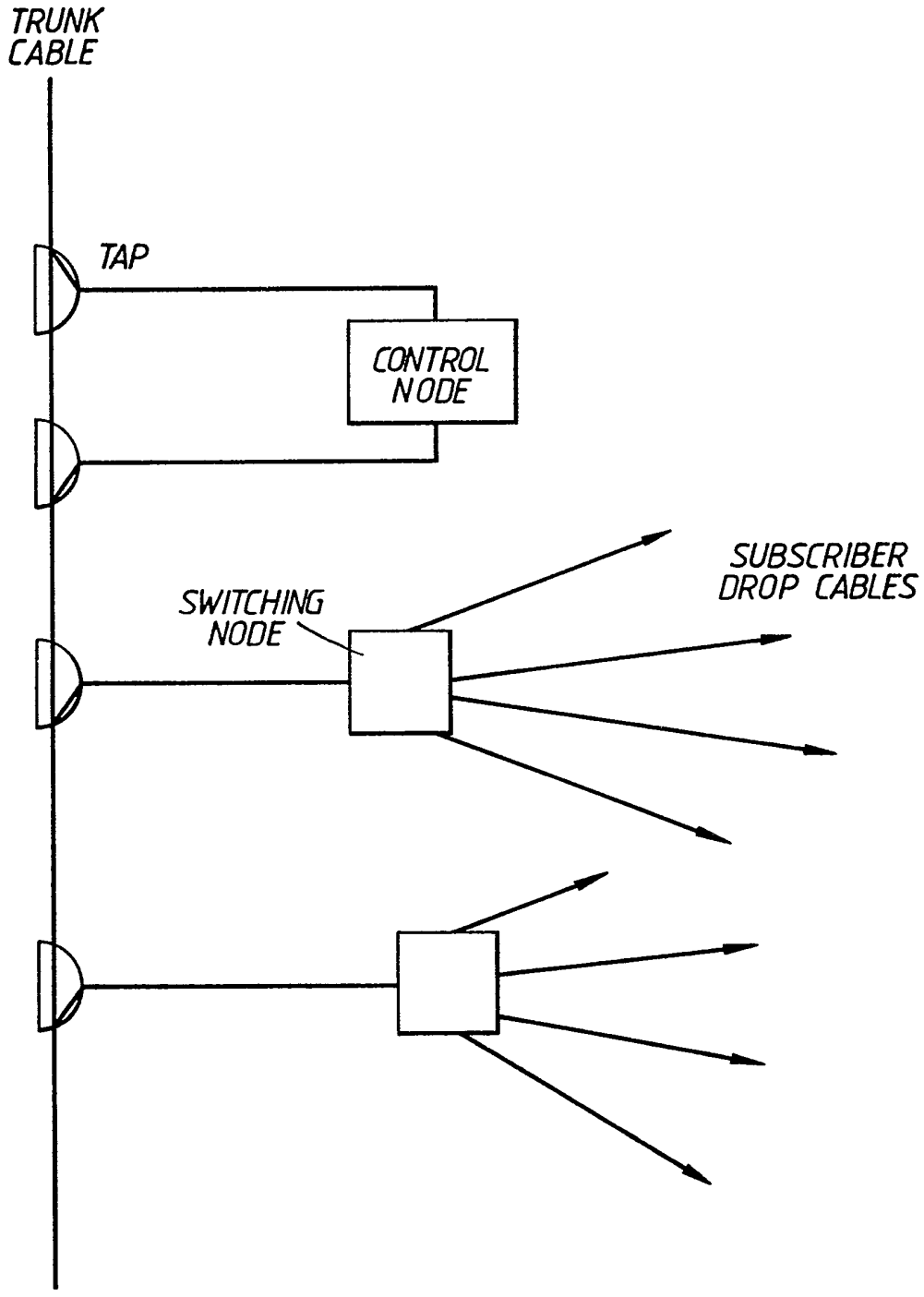
TRUNK CABLE
TAP
CONTROL NODE
SUBSCRIBER DROP CABLES
SWITCHING NODE

Fig.1(c).

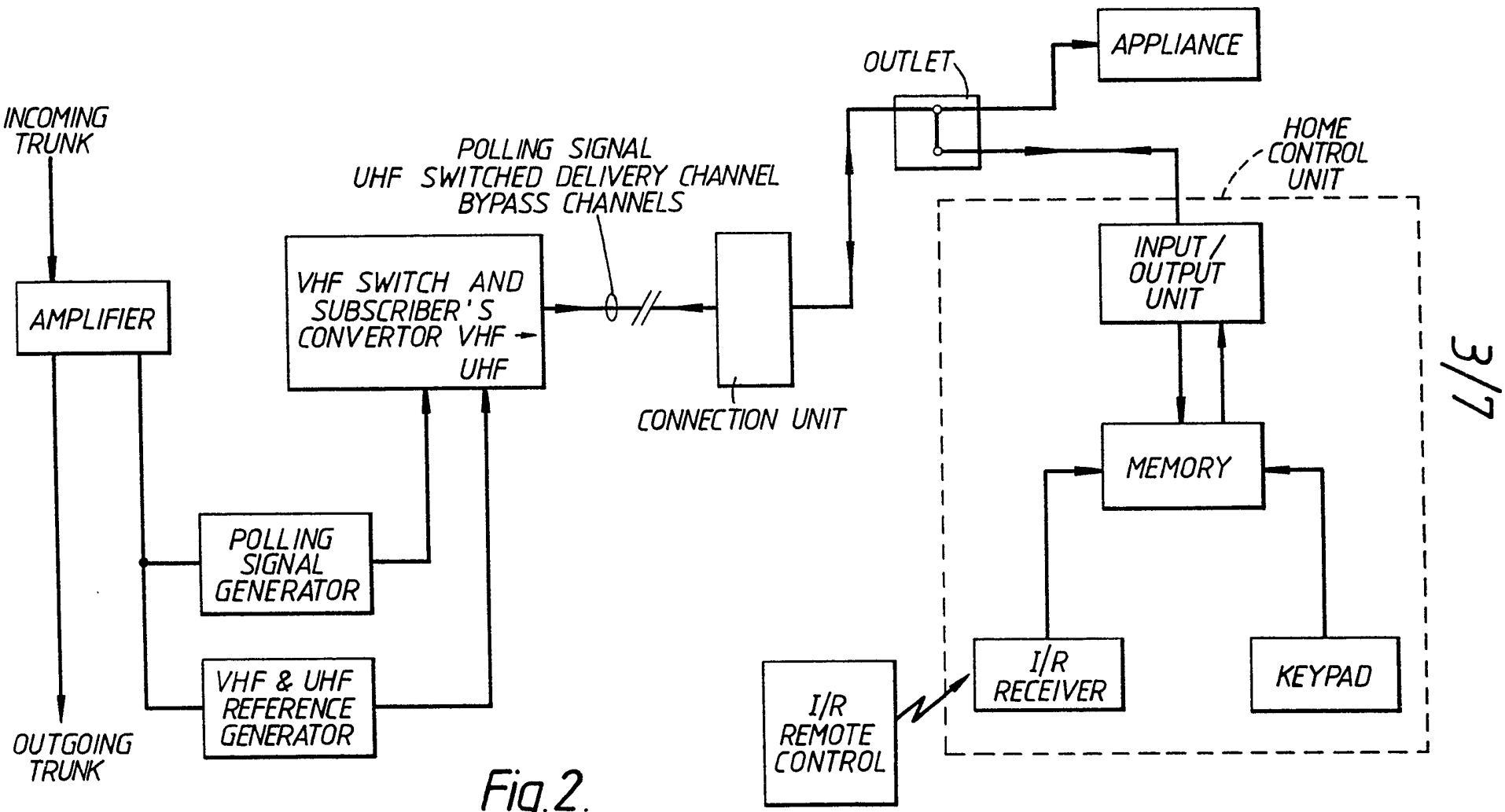
INCOMING TRUNK
AMPLIFIER
OUTGOING TRUNK
POLLING SIGNAL GENERATOR
VHF & UHF REFERENCE GENERATOR
POLLING SIGNAL
UHF SWITCHED DELIVERY CHANNEL
BYPASS CHANNELS
VHF SWITCH AND SUBSCRIBER'S CONVERTOR VHF → UHF
CONNECTION UNIT
OUTLET
APPLIANCE
HOME CONTROL UNIT
INPUT / OUTPUT UNIT
MEMORY
I/R RECEIVER
KEYPAD
I/R REMOTE CONTROL

Fig. 2.

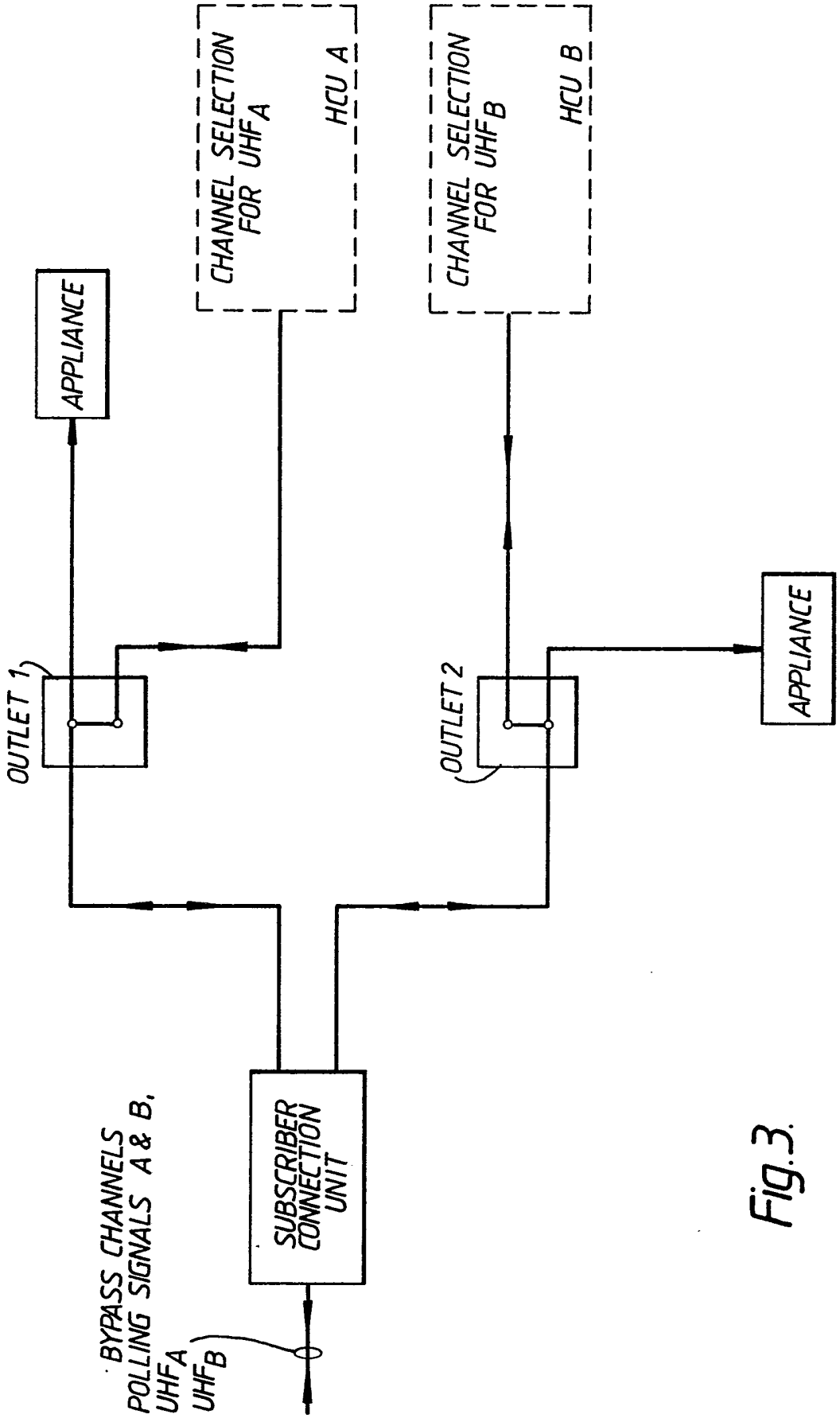
CHANNEL SELECTION FOR UHF A
HCU A
CHANNEL SELECTION FOR UHF B
HCU B
APPLIANCE
APPLIANCE
OUTLET 1
OUTLET 2
SUBSCRIBER CONNECTION UNIT
BYPASS CHANNELS POLLING SIGNALS A & B, UHF A UHF B

Fig.3.

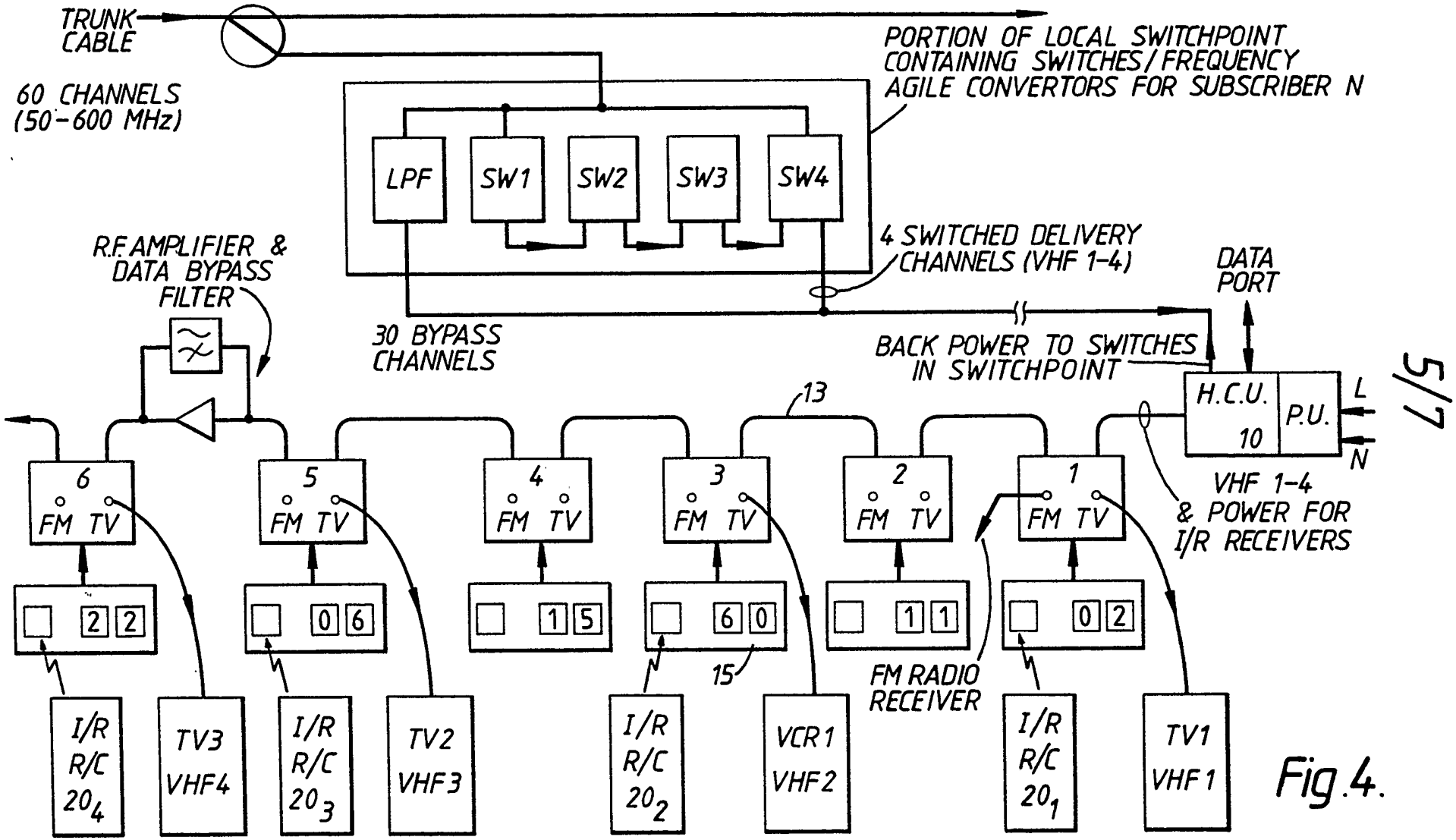
TRUNK CABLE
60 CHANNELS (50-600 MHz)
PORTION OF LOCAL SWITCHPOINT CONTAINING SWITCHES/FREQUENCY AGILE CONVERTORS FOR SUBSCRIBER N
LPF
SW1
SW2
SW3
SW4
4 SWITCHED DELIVERY CHANNELS (VHF 1-4)
R.F. AMPLIFIER & DATA BYPASS FILTER
30 BYPASS CHANNELS
DATA PORT
BACK POWER TO SWITCHES IN SWITCHPOINT
H.C.U. 10
P.U.
L
N
13
6 FM TV
5 FM TV
4 FM TV
3 FM TV
2 FM TV
1 FM TV
VHF 1-4 & POWER FOR I/R RECEIVERS
22
06
15
60
11
02
15
FM RADIO RECEIVER
I/R R/C 20 4
TV3 VHF4
I/R R/C 20 3
TV2 VHF3
I/R R/C 20 2
VCR1 VHF2
I/R R/C 20 1
TV1 VHF1

Fig.4.

5/7

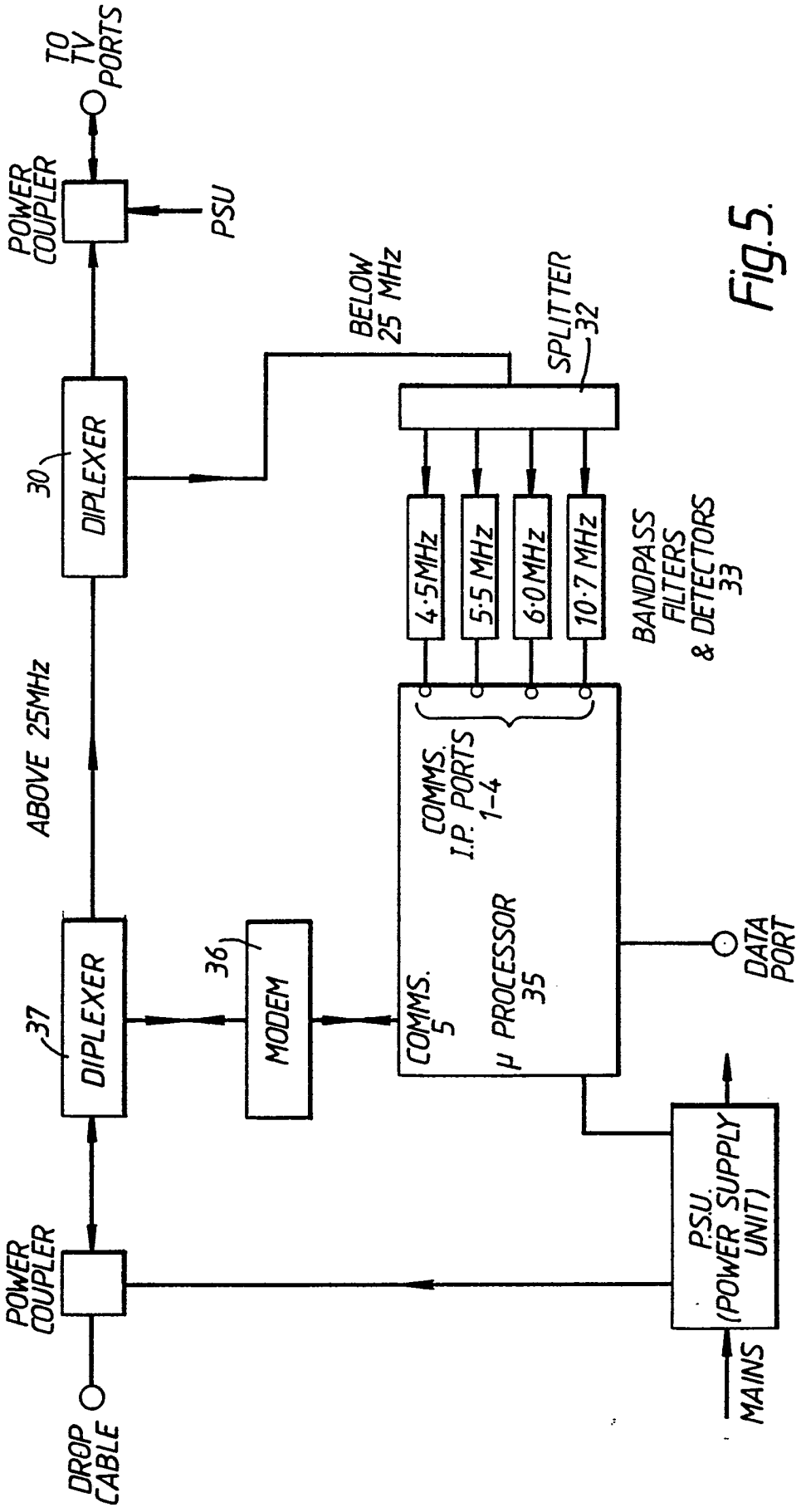
TO TV PORTS
POWER COUPLER
PSU
BELOW 25 MHz
SPLITTER 32
30
DIPLEXER
4·5MHz
5·5 MHz
6·0MHz
10·7 MHz
BANDPASS FILTERS & DETECTORS 33
ABOVE 25MHz
COMMS. I.P. PORTS 1-4
37
DIPLEXER
36
MODEM
COMMS. 5
μ PROCESSOR 35
DATA PORT
POWER COUPLER
P.S.U. (POWER SUPPLY UNIT)
DROP CABLE
MAINS

Fig.5.

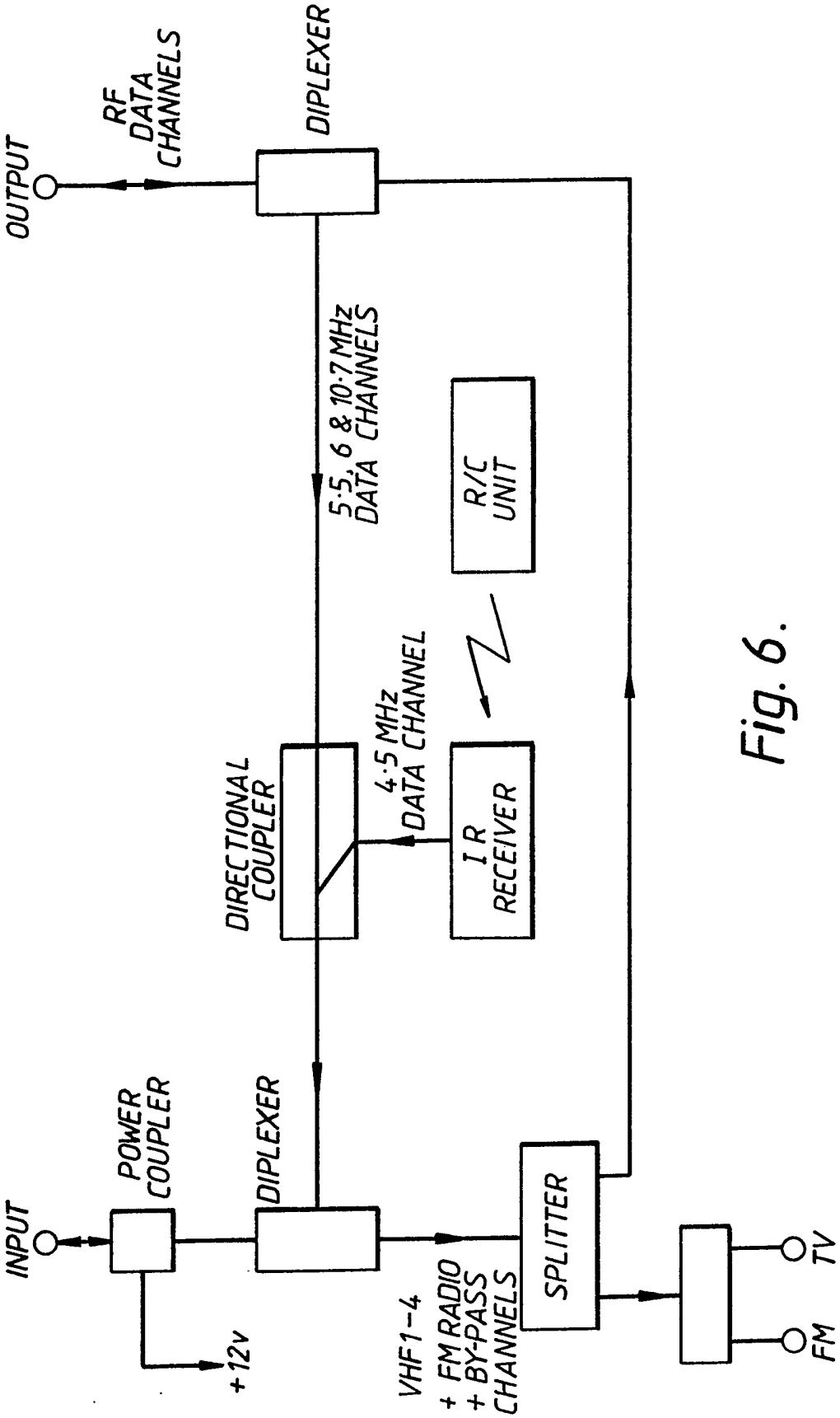
OUTPUT
RF DATA CHANNELS
DIPLEXER
5·5, 6 & 10·7 MHz DATA CHANNELS
R/C UNIT
4·5 MHz DATA CHANNEL
DIRECTIONAL COUPLER
I R RECEIVER
INPUT
POWER COUPLER
DIPLEXER
SPLITTER
+12v
VHF1-4 + FM RADIO + BY-PASS CHANNELS
TV
FM

Fig. 6.

TITLE OF THE INVENTION

CABLE TELEVISION

BACKGROUND TO THE INVENTION

FIELD OF THE INVENTION

The present invention relates to the field of cable television (giving that term its current broad definition to include cabled broadcasting of television, radio and data services as well as cabled provision of interactive services such as teleshopping). In particular, the invention relates to switched cable networks in which the subscriber has an element of choice in the channels physically provided to his home at a given time.

As is well known there are two main types of final distribution network (secondary network) used in delivery of cable television to subscribers. In "tree and branch" networks each individual subscriber has a drop cable tapped off from a feeder cable that passes the house (see Fig.1a). In "switched star" networks a switching/control node is provided, common to a group of subscribers, housing switches or frequency agile convertors for each subscriber. Each switch serves to select a particular channel from those provided on the trunk cable and to feed only the selected channel along the individual drop cable to a subscriber (see Fig.1b).

A variant of the above two proposals has been made ("distributed switching"). In this variant the switching nodes are made small (maybe even covering only a single subscriber) and separate control nodes are provided each controlling a plurality of switching nodes (see Fig.1c).

A feature of switched networks (whether switched star or distributed) is that at a given time the full set of channels available on the network is not supplied on the subscriber drop cable but instead a subset of channels is supplied, at least some of which are selected in response to dynamic subscriber requests (others, such as free channels, may be provided continuously).

In a switched network the selection of a channel which the subscriber has indicated he wishes to view is physically performed by equipment located in a street cabinet. As a result only one or two switched channels need to be delivered to the home, this results in very efficient use of the frequency spectrum in the final distribution network. The philosophy behind this method of distribution is that, in any household, only a few of the 60 or more channels available on the main distribution network are required for viewing or recording at any one time and thus it is much more efficient to carry only these channels into the home.

In conventional switched networks the circuitry controlling the switch mechanism/frequency agile convertor in the street cabinet is provided at least in part via a home control unit, HCU, operated by the subscriber (some control functions, such as checking entitlement of a subscriber to view a given channel, may be performed in the switchpoint itself or, in a distributed system, in a control node).

DESCRIPTION OF THE PRIOR ART

A conventional channel selection mechanism in a switched star network will now be described with reference to Fig.2.

In the example shown in fig.2 , the subscriber

receives a number of free channels as well as a group of premium channels. Only a selected one of the premium channels at a time is provided on the subsciber's drop cable.

At the local switchpoint the television channels supplied on the incoming trunk cable are accessed and amplified. A polling signal is generated and transmitted sequentially to each of the subscribers connected to the switchpoint. At a subscriber's home the home control unit, HCU, responds to a polling signal by transmitting back to the local switchpoint data on the currently selected premium channel, SPC (this data is held in a memory in the HCU and is updated on selection of a new premium channel by the subscriber via a keypad or infrared remote control).

In the switchpoint there is a frequency agile convertor in respect of each subscriber. This frequency agile convertor acts to convert the selected premium channel from a VHF frequency at which it was present on the incoming trunk cable to a UHF frequency, UHF_1, specific to that subscriber. The converted signal is output on the subscriber drop cable and is used by appliances in the subscriber's home which are tuned to frequency UHF_1.

Additional signals may also be transmitted from the switchpoint to the subscriber, for example to provide power to the subscriber's HCU.

In any cable television distribution network the final unit to be installed in the subscriber's home has to cater for a wide variety of "in-home" equipment configurations. Some households may have only a single television receiver, whereas others may have several television receivers and video recorders in various locations around the house (although usually these will

not all be in use at the same time).

A problem arises for a subscriber who has appliances in a number of different rooms when it comes to changing the selected premium channel. If the subscriber only has a single HCU then even though all of his appliances may be tuned to UHF_1 this only means that all of the appliances may view the premium channel currently selected at the HCU. If the HCU is located in room A then a subscriber who is viewing the premium channel in room B will be obliged to go into room A in order to change the selected premium channel. Clearly this will be inconvenient.

Alternatively, if the subscriber wants to be able at a number of different locations to independently select which premium channel he is viewing then he must obtain a number of home control units, one for each location. The ability to independently select a premium channel may be considered to be a "level of service" and so if a subscriber can independently select premium channels at two different locations within his home it may be said that he has two levels of service.

A system in which the subscriber has two or three locations at which he can independently change selected premium channels is described in a paper "Innovative Aspects of a Switched Star Cabled Television Distribution System" by Daniel H. Smart, 1987 NCTA Technical Papers, pages 27 to 35. The subscriber installation in such a system is illustrated in Fig.3.

In this prior art system a plurality of UHF channels are assigned to the subscriber, one for each level of service. The subscriber has two home control units, one at each of the locations at which the

subscriber wishes to be able to independently select the premium channel . Each of the HCUs controls the selection of the particular premium channel to be sent to the subscriber at one of the assigned UHF frequencies, i.e. HCU 1 controls the selection of the channel received at UHF_1 and HCU 2 controls the selection of the channel received at UHF_2. The local switchpoint polls each of the HCUs separately in order to check which channels to provide at frequencies UHF_1 and UHF_2.

Normally one HCU would be required for each independently controllable outlet in the home. Since each HCU contains complex and costly electronic systems the cost of the HCUs required escalates dramatically as the number of outlets grows with increased "in-home" equipment useage.

SUMMARY OF THE INVENTION

The problems associated with the prior art may be overcome by envisageing the ability to independently select a desired channel as a mobile facility. In other words the ability to independently select a particular channel should be treated as a facility to be exercised at any location within the subscriber's home, rather than as a facility associated with a fixed HCU.

According to one preferred embodiment of the invention this may be achieved by providing the subscriber with one infrared remote control for each level of service that the subscriber desires, each remote control being adapted to control selection of the channel to be supplied at one of the subscriber's UHF or VHF switched delivery channel frequencies.

This embodiment of the invention allows a subscriber to walk from room to room and use a remote control 20_1 in any suitably equipped room to change the selected channel at VHF_1. Similarly, another member of the subscriber's family may have an additional remote control 20_2 enabling that person to control selection of the channel received at VHF_2. Each room is suitably equipped to operate the invention by providing it with circuitry for receiving channel selections from a remote control and for transmitting to a central HCU the selections being made by a remote control in that room. The central HCU receives data on the channel selections being made by each remote control and conveys this data to the local switchpoint where it is used to control the relevant frequency agile convertors/switches.

In this way the subscriber has great flexibility in viewing and changing selected premium channels at a variety of locations within his home and, where the subscriber receives a number of "levels of service", the complex electronics in one HCU can be shared by a number of very simple infrared receivers associated with each of a very large number of independent outlets.

BRIEF DESCRIPTION OF THE DRAWINGS

Further features and advantages of the present invention will become clear from the following description of embodiments thereof, given by way of example, and illustrated by the accompanying drawings, in which:

Fig.1 illustrates diagrammatically the different types of final distribution network proposed for delivery of cable television services to subscribers, in which:

Fig.1a shows a "tree and branch" network;

Fig.1b. shows a "switched star" network; and

Fig.1c shows a "distributed switching" network;

Fig.2 is a diagram to illustrate a conventional process for channel selection in a switched network;

Fig.3 shows a prior art system in which channel selections may be made independently at a number of different locations;

Fig.4 shows in diagrammatic form a first embodiment of the invention;

Fig.5 shows in block diagrammatic form a home control unit according to a second embodiment of the invention; and

Fig.6 shows in block diagrammatic form an outlet useable with the HCU of Fig.5.

DESCRIPTION OF SPECIFIC EMBODIMENTS OF THE INVENTION

A first embodiment of the invention is illustrated diagramatically in Fig.4.

In this embodiment of the invention the subscriber is connected via a drop cable to a switchpoint in a street cabinet. The subscriber has four levels of service, in other words the subscriber has the capacity to make four independent selections of premium channels, and so there are four switches/frequency agile convertors for the subscriber in the switchpoint. The four selected channels will be transmitted along the subscriber's drop cable at frequencies VHF_1, VHF_2, VHF_3 and VHF_4. Each of these signals can carry any of the 60 or more premium channels available on the main trunk network.

Additionally the subscriber may receive a group of fixed "bypass" channels. These channels are not under the control of the switches in the street cabinet but are extracted from the trunk cable using a suitable filter and are delivered to the subscriber "en bloc". They are often used to carry a basic tier of programmes and provide a useful service in relation to video recorders. A single home control unit, HCU 10, is installed in the subscriber's home, close to the point of entry of the subscriber drop cable. From the HCU 10 a coaxial cable 13 carries the received cable television signals to other locations in the home where outlets are provided for access to the cabled services. This cable carries the switched delivery channels VHF_1, VHF_2, VHF_3 and VHF_4, together with the bypass channels and other signals provided by the cable network, such as frequency modulated radio services, to all outlets.

In order to be able to exercise the mobile channel change facility according to the present invention in the vicinity of any of the outlets 1-6, each of those outlets is provided with an infrared receiver/multiplexer unit 15. Each unit 15 is adapted to receive infrared signals from a mobile remote control unit 20 and to diplex those signals onto the coaxial cable 13. The received infrared signals identify not just the new premium channel which it is desired to select but also the delivery channel on which that premium channel is to be delivered to the home. These signals are transmitted to the HCU 10 via the coaxial cable 13 for use in controlling the switches/frequency agile convertors in the local switchpoint.

The H.C.U. 10 may include an associated power unit through which it generates signals for providing power to the switches/frequency agile convertors in the local switchpoint and for providing power to the infrared receivers/multiplexers 15, and, if necessary,

to amplifiers required to extend the home installation.

One infrared remote control unit 20 is supplied to the subscriber for each "level of service" that he requires. In the present example, where the subscriber can independently control the premium channel supplied to him on each of four switched delivery channels, he has four levels of service and thus is provided with four infrared remote control units 20.

Each of the infrared remote control units 20 is factory preset so as to control the operation of a particular one of the switches/frequency agile convertors SW1, SW2, SW3 or SW4, dedicated to the subscriber in his local switchpoint.

In the present embodiment the group of infrared remote control units supplied to a particular subscriber are equipped with different identification codes. When a subscriber uses a particular one, 20_2, of the remote control units 20 to make a selection of a premium channel to be received on a given switched delivery channel, VHF_2, then the remote control 20_2 transmits to a nearby infrared receiver/multiplexer unit 15 a signal containing, preferably in digital form, the channel number of the desired premium channel and the identification code of that handset 20_2. This channel number and identification code data is passed along the coaxial cable 13 to the HCU 10 by the infrared receiver/multiplexer unit 15.

The infrared receiver/multiplexer units 15 may each diplex their channel selection signals onto the coaxial cable 13 as soon as they receive a respective channel selection signal from a remote control unit 20. Alternatively they may store the channel selection data and release it to the HCU 10 on receipt of a polling signal from the HCU.

In other embodiments of the invention different methods may be used in order to identify to the H.C.U. the particular switched delivery channel that a given remote control unit 20 is to control. For example, in a second embodiment of the invention each receiver/multiplexer unit 15 may be adapted to cause channel selection signals to be diplexed on to the coaxial cables at a different subcarrier frequency depending on which of the subcarrier's remote control units originated the channel selection.

In such circumstances the infrared receiver/multiplexer units 15 may identify which remote control is originating a given received channel selection signal by recognition of an identification code transmitted by the remote control 20, or by the recognition of the frequency at which the remote control is transmitting (in a system where each remote control transmits channel selection signals at a different, characteristic frequency). In the latter case, since it is preferable to keep the complexity of the infrared receiver multiplexer units 15 low, the infrared receiver/multiplexer units 15 may be adapted to diplex the received signals onto the coaxial cable 13 at a frequency related to that used by the remote control 20.

Figs.5 and 6 show in block diagrammatic form an HCU and an outlet suitable for use in such a second embodiment of the invention.

In this second embodiment of the invention the remote control unit 20_1 used to control the switched delivery channel at VHF_1 is adapted to cause data transmissions to the HCU, via the coaxial cable 13, at a subcarrier frequency 4.5 MHz. Similarly the control 20_2 causes data transmissions at a subcarrier frequency of 5.5 MHz, control 20_3 causes data transmissions at a subcarrier frequency of 6.0 MHz and control 20_4 causes

data transmissions at 10.7 MHz. These data channel frequencies have been selected because of the ready availability of cheap mass-produced filters at these frequencies (these frequencies are the TV sound frequencies used in various parts of the world).

The general mode of operation of HCU units according to the invention is, as follows. The HCU 10 has been programmed to associate the identification code (or frequency) of a particular remote control unit, e.g. 20_2, with a particular one of the switched delivery channels, VHF_2, and has an area of memory reserved in respect of each remote control unit. On receipt of a channel selection data signal on the coaxial cable 13 the HCU 10 identifies the remote control originating the channel selection, 20_2, extracts the data representing the channel number of the desired premium channel and stores that data in the area of memory assigned to that remote control unit 20_2. The HCU 10 transmits the channel number data to the local switchpoint in response to a polling signal transmitted on the subscriber drop by the local switchpoint.

In an HCU unit according to the second embodiment of the invention, as illustrated by Fig.5, channel selection signals for the switched delivery channels are extracted from the coaxial cable 13 by a diplexer 30. The data signals for the individual switched delivery channels are separated out by a splitter 32 and a group of band-pass filters & detectors 33. A microprocessor 35 in the HCU receives the individual data signals at communications ports 1 to 4. The channel selections for given switched delivery channels are processed by the microprocessor 35. Communications port 5 of the microprocessor is reserved for communications with the local switchpoint (carried on the subscriber drop cable via a MODEM 36 and diplexer 37).

In order to check which premium channels are

required by a subscriber on each of his switched delivery channels the local switchpoint may generate a polling signal in respect of each switched delivery channel and transmit each of these polling signals sequentially on the subscriber drop, awaiting channel number data in respect of the first switched delivery channel before transmitting the polling signal in respect of the second delivery channel.

Alternatively, the switchpoint may be configured so as to transmit only a single polling signal to each subscriber and to receive back from the subscriber's HCU 10 a longer data message containing the channel numbers of the selected premium channels for all of the switched delivery channels. Each channel number may have associated with it a code identifying the switched delivery channel for which that channel number is selected, or the channel number data may be arranged in the data message in a predetermined order such that the switchpoint looks at a particular location in the data message in order to find the channel number selected for a given switched delivery channel.

It will be readily apparent to a person skilled in the art that the polling signals may be generated using known circuitry generally used and proposed for that purpose in switched networks and, once the channel number data has been obtained in respect of a particular switched delivery channel, known methods and apparatus may be used for extracting the desired premium channel from the trunk network, converting the signal to the appropriate switched delivery channel frequency, e.g. VHF2, and delivering that signal to the subscriber via his drop cable. Such known methods and apparatus are described, for example, in the D.H. Smart article mentioned above, the technical disclosure of which is incorporated herein by reference.

In operation the distribution system within the home can be considered to be a loop through system feeding as many outlets as desired. Various appliances may be connected at each outlet in order to make use of the provided cabled services. In the Fig.4 example there are six outlets; in practice it is likely that each outlet will be in a different room. Televisions are connected at outlets 1,5 and 6, a video recorder is connected at outlet 3, and outlets 2 and 4 do not have video appliances connected thereto. Radio receivers may be connected to the f.m. socket of any of these outlets. Each video appliance is tuned to receive one or more of the bypass channels and switched delivery channels VHF_1, VHF_2, VHF_3 and VHF_4, as well as any desired off-air broadcast channels.

In order to be able to fully appreciate the mobile facility offered by the present invention of being able to select from any location the premium channel to be delivered on a particular switched delivery channel, e.g. VHF_2, every appliance should be tuned so as to be able to receive that switched delivery channel VHF_2. In that way a subscriber equipped with the remote control 20_2 which controls selection of the premium channel to be provided at VHF_2 can wander from room to room, use his remote control to select any premium channel he wishes to view (which will be provided at VHF2), and view that selected channel on any appliance.

If only some of the appliances (e.g. TV1 and TV2) were tuned to VHF_2 then the situation could arise where the subscriber was in a room (housing outlet 6) at which he could change the premium channel provided on VHF_2 but he would not be able to view his selection in that room. This may be acceptable in some applications.

In summary, a remote control 20_1 adapted to control selection of the channel to be provided at VHF_1

may be used in conjunction with the infrared receiver/multiplexer unit 15 at any outlet to change the selected channel on VHF1 but the selection can only be viewed on televisions/video recorders tuned to VHF_1.

It can be useful for the subscriber if each of the infrared receiver/multiplexer units 15 possesses a display showing the identifying number of the premium channel last selected via that unit 15. In this example the units 15 are shown as having two-digit liquid crystal displays. Alternatively, "on-screen" display of channel selection may be used by means of text inserters in the switchpoint.

The specific embodiments described above are only examples of how the invention may be implemented. A large number of alternative embodiments are possible differing from those described above in major and minor details. Some of the available variations have been mentioned above but examples of further alternatives are given below.

Firstly, the mobile units 20 used for making channel selections need not be infrared remote control units. The mobile units may operate in a different portion of the frequency spectrum. Clearly the receiver/multiplexer units 15 would be tailored to receive channel selection signals at the appropriate frequencies. However by departing from the infrared remote control units the possibility is opened up of adopting a system resembling cordless telephone technology so as to dispense with receiver/multiplexer units 15 entirely. In other words the mobile units 20 would be adapted to transmit their channel selection signals over distances of tens or hundreds of metres directly to a central HCU equipped with appropriate receiver circuitry.

Also, the mobile units 20 need not be remote control units but may be adapted for mechanical coupling to/uncoupling from the receiver/multiplexer units 15, or indeed for coupling/uncoupling directly with the outlets

(in which case the mobile unit includes the circuitry for multiplexing channel selection signals onto the coaxial cable 13). The slight loss in convenience for the subscriber would be offset in the latter case by reduction in the amount of circuitry required in the subcarrier's installation.

In other embodiments of the invention specially adapted televisions and video recorders may be used which incorporate the functions of the receiver/multiplexer units 15.

In further embodiments of the invention it is the mobile units 20 themselves that may be dispensed with. Instead of using mobile units each of the receiver/multiplexer units 15 may be equipped with a keypad or other means for manual entry of channel selections on the switched delivery channels. In its basic version such a system relies on the subscriber inputting details not only of the desired channel but also of the switched delivery channel to be used for provision of the selected programme. Unless the subscriber and his family are very disciplined this may give rise to pranks whereby for example family member B who is supposed to control VHF_2 uses the receiver/multiplexer at outlet 3 to alter the channels selected on VHF_1, VHF_3 and VHF_4 currently being viewed by other family members in other parts of the home. This problem may be avoided by assigning codes, or PIN numbers, to each of the switched delivery channels, known only to the person intended to control that delivery channel.

An additional advantage provided by embodiments of the invention lies in the area of "parental control" of viewing. If a subscriber wishes to prevent his children from having access to particular premium channels available via the switched delivery

channels then he can do so in a number of ways. He can withhold from them entirely the ability to make independent channel selections (e.g. by failing to give them a mobile unit 20 or a switched delivery channel PIN number). Alternatively he can give them the ability to control particular switched delivery channels (e.g. VHF_2 and VHF_3) and condition the system so as not to output the vetoed premium channels on those switched delivery channels VHF_2 and VHF_3. This may be done by providing a memory at the HCU, or at the local switchpoint, storing details of the premium channels that are allowed to be output via the subscriber drop cable on particular switched delivery channels. Channel selection requests are then vetted with reference to this stored information before operating the relevant frequency agile convertor at the local switchpoint.

Alternatively, the subscriber may allocate to his children independent control of switched delivery channel VHF_2 and himself hold a master control (or set of master control codes) capable of controlling VHF_2 as well as one or more other switched delivery channels. Thus the subscriber may check and alter his children's viewing selections.

In order to avoid a "battle of the remote controls" with the subscriber and his children alternately switching away from and switching back to, respectively, a vetoed channel, the subscriber may also be furnished with buttons/codes indicating that his selections for viewing at VHF_2 are to be temporarily locked, ie. only changeable in response to a further channel selection signal from the subscriber or in response to a "release" signal from the subscriber.

CLAIMS:

1. A subscriber installation in a cable television network of the switched type wherein a subscriber receives cable television via a subscriber drop cable, at least one channel being output on the subscriber drop cable at a frequency f_1 dedicated to the subscriber and the particular channel to be output at said dedicated frequency f_1 being determined by an off-premise switch or frequency agile convertor in response to dynamic subscriber selections, the subscriber installation comprising:

outlets, at a plurality of spatially separated locations, at which the signals provided on the drop cable at the dedicated frequency may be accessed for viewing;

selection means, operable in the vicinity of any of said outlets, for selecting the particular channel to be output at the dedicated frequency on the subscriber drop cable; and

a home control unit for processing the selections made by the selection means and conveying them to the off-premise switch/converter.

2. A subscriber installation according to claim 1, wherein the selection means comprises a mobile unit adapted to transmit channel selection signals directly to the home control unit at radio frequencies.

3. A subscriber installation according to claim 1, wherein each of the outlets is connected to the home control unit and there is further provided a receiver/multiplexer unit at each of the outlets, said receiver/multiplexer units each being adapted to receive channel selection data from the selection means and to convey said data to the home control unit.

4. A subscriber installation according to claim 3, wherein the selection means comprises a mobile unit adapted to transmit channel selection signals to said receiver/multiplexer units.

5. A subscriber installation according to the claim 3, wherein the selection means comprises a keypad or other manually actuable means for entering channel selections directly into said receiver/multiplexer units.

6. A subscriber installation according to claim 1, wherein a plurality of channels are output on the subscriber drop cable at frequencies dedicated to the subscriber and the particular channel to be output at each of said dedicated frequencies is determined by a respective switch or frequency agile converter in response to dynamic subscriber selections, and wherein the outlets are adapted to provide access for viewing the signals provided on the drop cable to be had at any of the dedicated frequencies and the selection means is adapted for selecting the particular channel to be output at each of said dedicated frequencies.

7. A subscriber installation according to claim 6, wherein the selection means comprises a plurality of mobile units each adapted to control channel selection for one of the dedicated frequencies and each adapted to transmit channel selection signals directly to the home control unit, said channel selection signals indicating the dedicated frequency to which the channel selection signal relates.

8. A subscriber installation according to claim 6, wherein each of the outlets is connected to the home

control unit, and there is further provided a receiver/multiplexer unit at each of the outlets, said receiver/multiplexer units each being adapted to receive from the selection means channel selection data and an indication of the dedicated frequency to which a given channel selection signal relates.

9. A subscriber installation according to claim 8, wherein the selection means comprises a plurality of mobile units each adapted to control channel selection for one of the dedicated frequencies and each adapted to transmit to the receiver/multiplexer units channel selection signals indicating the dedicated frequency to which the channel selection signal relates.

10. A subscriber installation according to claim 9, wherein each of said mobile units has an identification code and is adapted to include said identification code in the channel selection signals generated thereby.

11. A subscriber installation according to claim 9, wherein each of said mobile units has a different subcarrier frequency associated therewith such that receiver/multiplexer units receiving channel selection signals from said mobile unit convey the channel selection to the home control unit via a data channel at said subcarrier frequency.

12. A subscriber installation according to claim 11, wherein said subcarrier frequencies are at radio frequencies.

13. A subscriber installation according to claim 8, wherein the selection means comprises a keypad or other manually actuatable means for entering directly to said receiver/multiplexer units channel selections and an indication of the dedicated frequencies to which the respective channel selections relate.

14. A subcarrier installation according to any of claims 6 to 13, wherein the home control unit stores information on vetoed channels which are not to be supplied on the subscriber drop cable at a particular dedicated frequency and vets channel selections so as to identify selection of a vetoed channel for said particular dedicated frequency and prevent said selection from being put into effect.

Patents Act 1977
Examiner's report to the Comptroller under Section 17 (The Search Report)

Application number

9110580.9

Relevant Technical fields

(i) UK Cl (Edition K) H4R (RCSS,RCS)

(ii) Int Cl (Edition 5) H04H 1/02; H04N 7/173

Search Examiner

K WILLIAMS

Databases (see over)

(i) UK Patent Office

(ii)

Date of Search

18 OCTOBER 1991

Documents considered relevant following a search in respect of claims 1-14

Category (see over)	Identity of document and relevant passages	Relevant to claim(s)
X	GB 2166328 A (ISEC) - see Figure 1	1,2,6,7
X	EP 0183871 A1 (Packet Technologies) & US 4509073 see drawing	1,2,6,7
A	Innovative Aspects of a Switched Star Cabled Television Distribution System by Daniel H-Smart, 1987, NCTA Technical Papers pages 27 to 35	1

Category	Identity of document and relevant passages	Relevant to claim(s)

Categories of documents

X: Document indicating lack of novelty or of inventive step.

Y: Document indicating lack of inventive step if combined with one or more other documents of the same category.

A: Document indicating technological background and/or state of the art.

P: Document published on or after the declared priority date but before the filing date of the present application.

E: Patent document published on or after, but with priority date earlier than, the filing date of the present application.

&: Member of the same patent family, corresponding document.

Databases: The UK Patent Office database comprises classified collections of GB, EP, WO and US patent specifications as outlined periodically in the Official Journal (Patents). The on-line databases considered for search are also listed periodically in the Official Journal (Patents).

Published 1992 at The Patent Office, Concept House, Cardiff Road, Newport, Gwent NP9 1RH. Further copies may be obtained from Sales Branch, Unit 6, Nine Mile Point, Cwmfelinfach, Cross Keys, Newport, NP1 7HZ. Printed by Multiplex techniques ltd, St Mary Cray, Kent.