Dec. 22, 1925. 1,566,861

R. F. HALLIWELL

ELASTIC FLUID TURBINE

Filed June 30, 1925

Fig. 1.

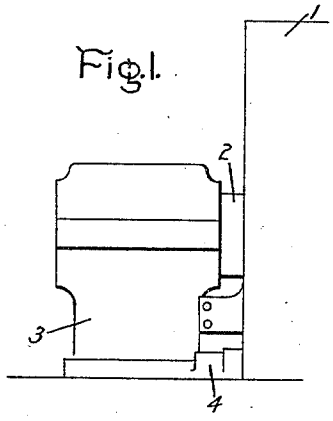

Fig. 2.

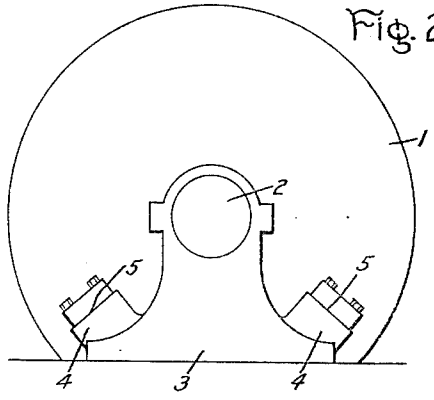

Fig. 3.

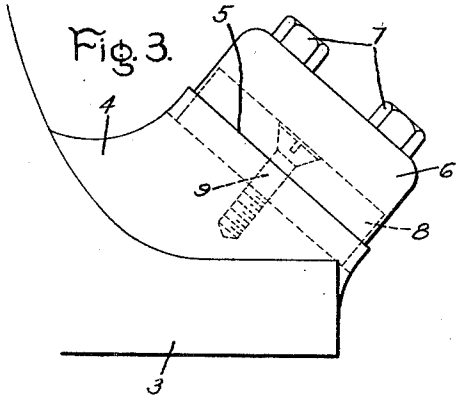

Fig. 4.

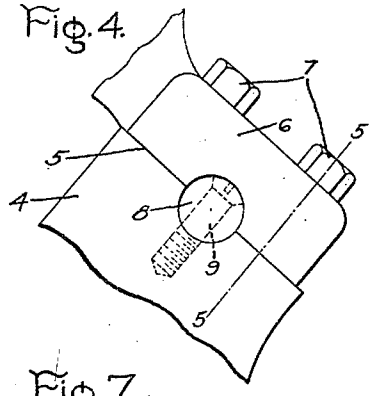

Fig. 7.

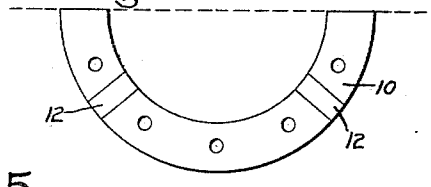

Fig. 6.

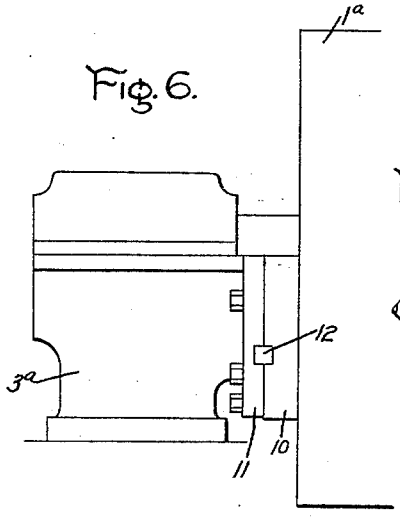

Fig. 5.

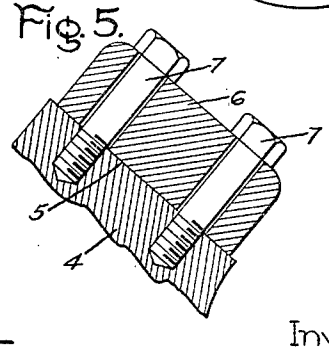

Inventor:
Reginald F. Halliwell,
by Alexander S. Lunt.
His Attorney.

Patented Dec. 22, 1925. 1,566,861

UNITED STATES PATENT OFFICE.

REGINALD FRANCIS HALLIWELL, OF LEAMINGTON SPA, ENGLAND, ASSIGNOR TO GENERAL ELECTRIC COMPANY, A CORPORATION OF NEW YORK.

ELASTIC-FLUID TURBINE.

Application filed June 30, 1925. Serial No. 40,623.

To all whom it may concern:

Be it known that I, REGINALD FRANCIS HALLIWELL, a British subject, residing at Leamington Spa, in the county of Warwick, England, have invented certain new and useful Improvements in Elastic-Fluid Turbines, of which the following is a specification.

This invention relates to elastic fluid turbines of the type in which the pedestals carrying the shaft bearings are formed separately from the casing. In such turbines considerable difficulty is found in maintaining the correct alignment of the shaft, casing and bearings owing to differences in temperature and consequent differences in expansion of the casing and pedestals.

The object of the present invention is to overcome this difficulty and to that end it comprises arranging members on the casing to so cooperate with supporting members on the pedestals as to be capable of radial movement relative to the shaft center to correct for relative expansion of the casing and pedestal.

The invention is illustrated in the accompanying drawing, in which Figs. 1 and 2 are respectively a side view and an end view of one arrangement embodying the invention; Figs. 3 and 4 are enlarged views of the connection between the casing and the pedestal; Fig. 5 is a detail, sectional view taken on line 5—5, Fig. 4; and Figs. 6 and 7 are respectively a side view and an end view of a modified arrangement.

Referring to Figs. 1 and 2, 1 represents the casing of an elastic fluid turbine whose shaft 2 is supported in bearings carried by a pedestal 3. Two projections 4 which are secured to, or formed integral with, the pedestal 3 have facings 5, the planes of which are equally and oppositely inclined to the base, preferably at an angle of about 45° thereto, and pass through the center line of the shaft 2. The casing 1 is fitted with lugs 6 which rest on the projections 4, the lugs 6 having facings corresponding with facings 5. With such supports for the casing 1 its center line will remain coincident with that of the shaft 2 under all conditions of temperature changes, as owing to the position of the engaging surfaces any horizontal expansion of the casing will be accompanied by a similar vertical expansion and the lugs will move in a radial direction and parallel to the engaging surfaces. The holes for the bolts 7 securing the lugs 6 to the projections 4 are made sufficiently large to allow for any relative movement that may occur. This is illustrated in Fig. 5.

As shown in Figs. 3 and 4, radial keys such as 8 may be fitted between the facings on the projections 4 and lugs 6 to prevent relative axial movement between the casing and the pedestal. These keys may conveniently be made round and held in position by small countersunk screws such as 9, or alternatively they may be of square or rectangular or other suitable section.

Figs. 6 and 7 show a modified arrangement in which the casing 1^a is provided with an arc-shaped flange 10 bolted to a corresponding flange 11 on the bearing pedestal 3^a. Two radial keys 12 are provided between the flanges 10 and 11 and are arranged so that their center lines pass through the shaft center. The keys are equally and oppositely inclined to the base, preferably at an angle of about 45° thereto. This arrangement permits of radial movement of the flange 10 over the face of the flange 11, the bolt holes in the flanges being sufficiently large to allow of this movement.

What I claim as new and desire to secure by Letters Patent of the United States is:

1. In an elastic fluid turbine comprising a shaft, a casing, and a bearing pedestal formed separately from the casing, means for supporting said casing on the pedestal, said means comprising cooperating members on the pedestal and casing having engaging surfaces capable of radial movement relative to the center of the shaft to correct for relative expansion of the casing and pedestal.

2. In an elastic fluid turbine comprising a shaft, a casing, and a bearing pedestal formed separately from the casing, means for supporting said casing on the pedestal, said means comprising supporting members on the pedestals having supporting surfaces whose planes are equally inclined to the base and pass through the center line of the shaft, and lugs on the casing having surfaces which engage the surfaces of said supporting members.

3. In an elastic fluid turbine comprising a shaft, a casing, and a bearing pedestal formed separately from the casing, means for supporting said casing on the pedestal,

said means comprising supporting members on the pedestals having supporting surfaces whose planes are equally inclined to the base and pass through the center line of the shaft, lugs on the casing having surfaces which engage the surfaces of said supporting members, and radial keys between the cooperating surfaces of said members and lugs for preventing relative axial movement.

4. The combination with an elastic fluid turbine having a casing provided with supporting means and a pedestal having supporting means upon which said casing supporting means rests, of radially-extending keys located between said supporting means, said keys being equally and oppositely inclined to the base whereby they are adapted to admit of radial movement of the casing relatively to the pedestal.

5. The combination with an elastic fluid turbine having a shaft and a casing, of a supporting structure having surfaces the planes of which are inclined from the horizontal and pass through the center line of the shaft, and parts carried by the turbine casing having similarly inclined surfaces which rest on the first-named surfaces for supporting the turbine casing on said structure.

In witness whereof I have hereunto set my hand this 10th day of June, 1925.

REGINALD FRANCIS HALLIWELL.