Jan. 20, 1942. J. DINHOFER 2,270,420

DIAMOND HOLDER

Filed May 1, 1941

Fig. 1.

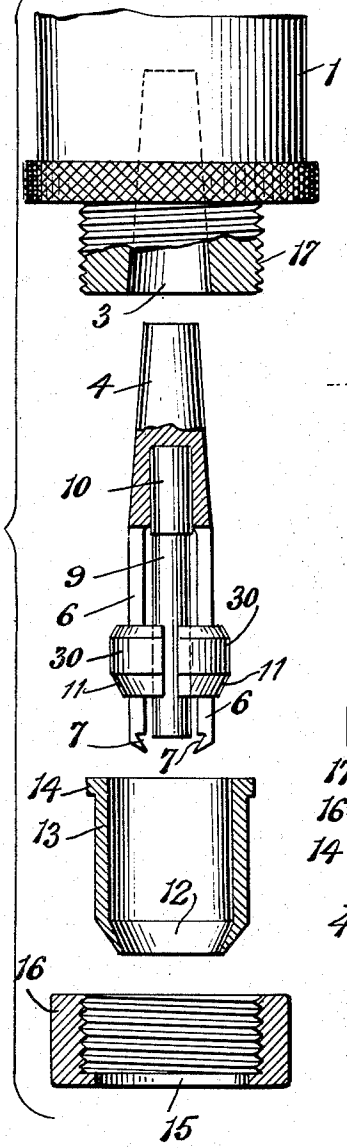

Fig. 2.

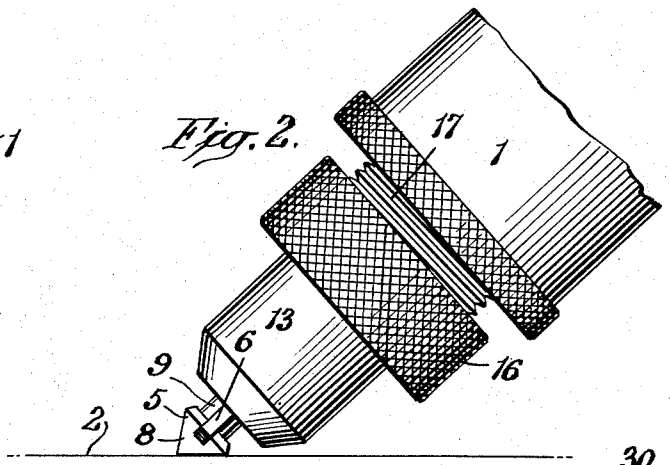

Fig. 7

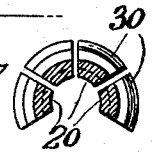

Fig. 3.

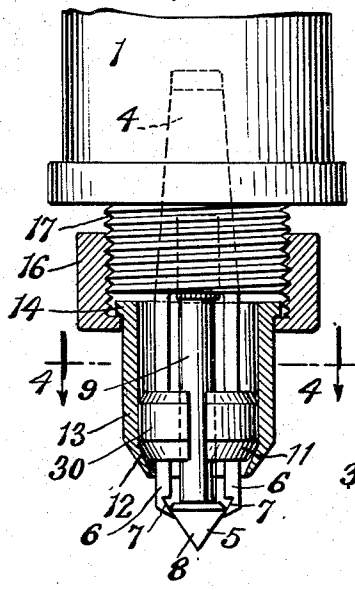

Fig. 5.

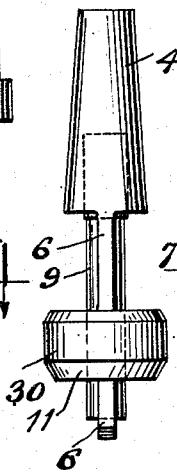

Fig. 6.

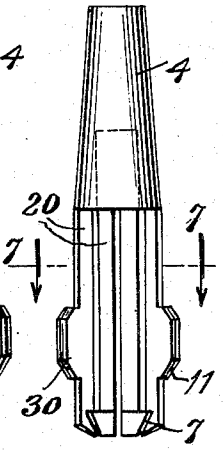

Fig. 4.

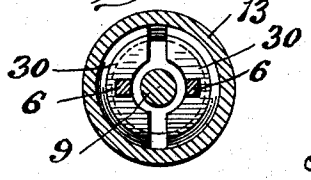

Fig. 8.

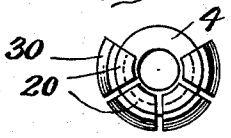

INVENTOR

Julius Dinhofer

BY

Harry Ratzinsky

ATTORNEY

Patented Jan. 20, 1942 2,270,420

UNITED STATES PATENT OFFICE

2,270,420

DIAMOND HOLDER

Julius Dinhofer, New York, N. Y.

Application May 1, 1941, Serial No. 391,236

6 Claims. (Cl. 51—229)

This invention relates to holders for diamonds, and has for its primary object the provision of means by which diamonds may be securely held during the operations of polishing or grinding the stones.

At the present time, diamonds are held during polishing in a suitable holder by means of an adhesive, which often, during the polishing operation permits shifting of the stone, requiring alignment and adjustment to secure accurate polishing results. The present invention contemplates the provision of holding means in which the stone to be polished is securely held or gripped by mechanical means, yet the portion of the stone to be polished is exposed and readily accessible to the grinding surface. The invention also contemplates the provision of readily releasable holding means by which the position of the stone may be changed as required during the grinding operation, and by which the stone may be freed and another inserted when required.

In the accompanying drawing, forming a part hereof, Fig. 1 is a side elevation, with parts in section, of the improved holder, the parts thereof being separated from one another; Fig. 2 is a side elevation of the holder showing the manner in which a stone held by the device may be applied to the surface of the polishing wheel; Fig. 3 is a vertical sectional view through the holder; Fig. 4 is a sectional view on the line 4—4 of Fig. 3, looking in the direction of the arrows; Fig. 5 is a side view of the stone-gripping mechanism; Fig. 6 is a side view of a modified stone-holding member; Fig. 7 is a sectional view on the line 7—7 of Fig. 6, looking in the direction of the arrows; and Fig. 8 is a view from below of the holder shown in Fig. 6.

With reference to the device as disclosed in Figs. 1 to 5 inclusive, 1 indicates a head, forming part of a suitable support by which the stone or gem is held against the surface 2 of the diamond-polishing wheel. The head 1 is provided with a centrally located tapering recess 3 for the reception of a complementary shank portion 4 formed on the clamp which holds the stone 5 during the polishing operation. Extending downwardly from the lower end of the shank 4 of the clamp is a pair of gripping fingers or jaws 6, said fingers or jaws having their lower end portions notched, as indicated at 7, whereby they may fit over and engage between them, the stone 5, as indicated in Fig. 3. It will be seen that the notched portions 7 of the fingers 6 engage the stone at diametrically opposite points and adjacent to the girdle thereof so that the lower portion 8 of the stone projects well beyond the jaws and can be placed flatwisely against the surface 2 of the polishing wheel for the grinding and polishing of the lower facets, as clearly seen in Fig. 2. It will also be noted from Fig. 3 that the jaws 6 are relatively thin and thus actually cover but a small portion of the stone engaged by them, so that a considerable part of the portion of the stone below the girdle thereof can be brought into contact with the polishing surface before it becomes necessary to shift the stone in the holder.

When the stone is held between the fingers or jaws 6, it is prevented from inward or retreating movement in the holder by means of a rod or stem 9, against which the top surface of the stone abuts, said rod or stem having a head portion 10 frictionally held within a recess provided for it within the shank 4. Thus, when the stone is clamped between the fingers 6, it is also engaged at the top by the end of the stem 9 and said stem, in cooperation with the fingers 6, holds the stone securely against displacement.

Formed on or otherwise secured to the fingers or jaws 6 are arcuate segments 30 having the tapered under surface 11 adapted for engagement by a similar cam surface 12 provided on the lower interior portion of a collar 13. At its upper end, the collar 13 is provided with a radially extending flange 14 under which the inwardly extending flange 15 of an internally threaded nut 16 engages. Nut 16 is externally knurled and threads upon the threaded stud portion 17 provided at the end of the head 1.

The holder is shown in assembled position in Fig. 2, wherein it will be seen that by adjustment of the nut 16 on the threaded stud portion 17, the collar 13 will be caused to bring its inclined cam surface 12 against surface 11 on the arcuate members 30 thereby bringing the two fingers 6 toward one another to the required extent to cause the same to grip the stone 5 firmly between them, and in co-operation with the end of the stem 9 securely hold the stone to enable the same to be positioned against the polishing wheel and have its lower facets polished, as clearly shown in Fig. 2. Since the fingers or jaws 6 cover but a very small portion of the area of the lower part of the stone, the holder 1 may be rotatively shifted to readily polish the lower facets, requiring but little shifting of the stone in the holder.

In the structure shown in Figs. 6 to 8 inclusive, a modification is disclosed wherein a number of

segmental jaws 20 are employed to hold the stone between them. This arrangement will very securely hold the stone, although the utilization of additional stone-gripping jaws causes a larger surface of the stone to be covered thereby so that the stone must be shifted more often in its holder than is the case with the structure of Figs. 1 to 5 inclusive. In cases where extraordinary gripping of the stone is required, a structure similar to that of Figs. 6 to 8 inclusive will be found highly efficient.

With the stone-holding devices disclosed, the stones are held firmly and accurately during the polishing operation; the possibility of the same becoming dislodged is avoided, and efficiency in the grinding and polishing operations is attained.

What I claim is:

1. A stone-holder for diamond-polishing machines comprising, a head provided with a conical recess, a stone holder having a tapered end entrant into said recess, said stone holder being provided with several integral, resilient fingers for holding a stone between them, an abutment located between the fingers and against which a portion of the stone rests, a collar adjustable on the head, a clamping ring engaged by the collar, and co-operating cam surfaces on the clamping ring and fingers for causing the fingers to be moved toward one another when the collar is adjusted on the head.

2. A stone-holder for diamond-polishing machines comprising, a head, a stone holder fitted in said head, the head having a threaded shank, a collar adjustably received on said shank, said collar having an inturned flange, a clamping ring having a radially extending flange overlying the flange on the collar, several clamping fingers carried by the holder, a stop disposed between said fingers, and cam surfaces on said fingers and on the interior of the clamping ring for causing the fingers to be moved toward one another upon adjustment of the collar on the shank.

3. A stone holder for diamond-polishing machines comprising, a head provided with a threaded shank, said head being provided with a tapered recess disposed axially of the threaded shank, a stone holder having a tapered end fitted in said recess, several integrally formed, flexible fingers on said stone holder for engaging a stone between them, an abutment disposed between the fingers and co-operating therewith in holding the stone, an arcuate, tapering-surfaced cam portion carried by each of the fingers, a clamping ring surrounding said cam portions, said ring having an inclined annular surface operative against the cam portions to force the fingers toward one another, a threaded collar on the shank, said collar acting to hold the stone holder in the recess and to also retain the adjusting ring in position about the fingers.

4. A stone holder comprising, a stem, a head in which said stem is received, said stem having at least two integrally formed resilient, stone-engaging fingers, a ring surrounding said fingers and adapted to cause the fingers to be flexed to bring them toward one another, and an adjustable member for moving the ring, said member being adjustably received upon the head.

5. A stone holder comprising, a stem, a head in which said stem is received, said stem having at least two integrally formed resilient, stone-engaging fingers, a ring surrounding said fingers and adapted to cause the fingers to be flexed to bring them toward one another, and an adjustable member for moving the ring, said member being adjustably received upon the head, said adjustable member constituting the means by which the stem is maintained in the head and by which the ring is maintained in position around the fingers.

6. A stone holder for diamond-polishing machines comprising, a head, a holder removably received therein, said holder comprising a tapered stem and at least two resilient integral stone-holding fingers, each of said fingers having a notched end, an arcuate cam surface on each finger adjacent to the notched end, a clamping ring surrounding said cam surfaces and having internal co-operating surfaces operative against said cam surfaces to flex the fingers toward one another, and a collar adjustable on the head, said collar having a portion engaging around the clamping ring for moving said ring axially of the holder when the collar is moved on the head.

JULIUS DINHOFER.