P. GERHARDT.

METAL DOOR AND WINDOW FRAME CONSTRUCTION.

APPLICATION FILED MAY 4, 1912.

1,068,645. Patented July 29, 1913.

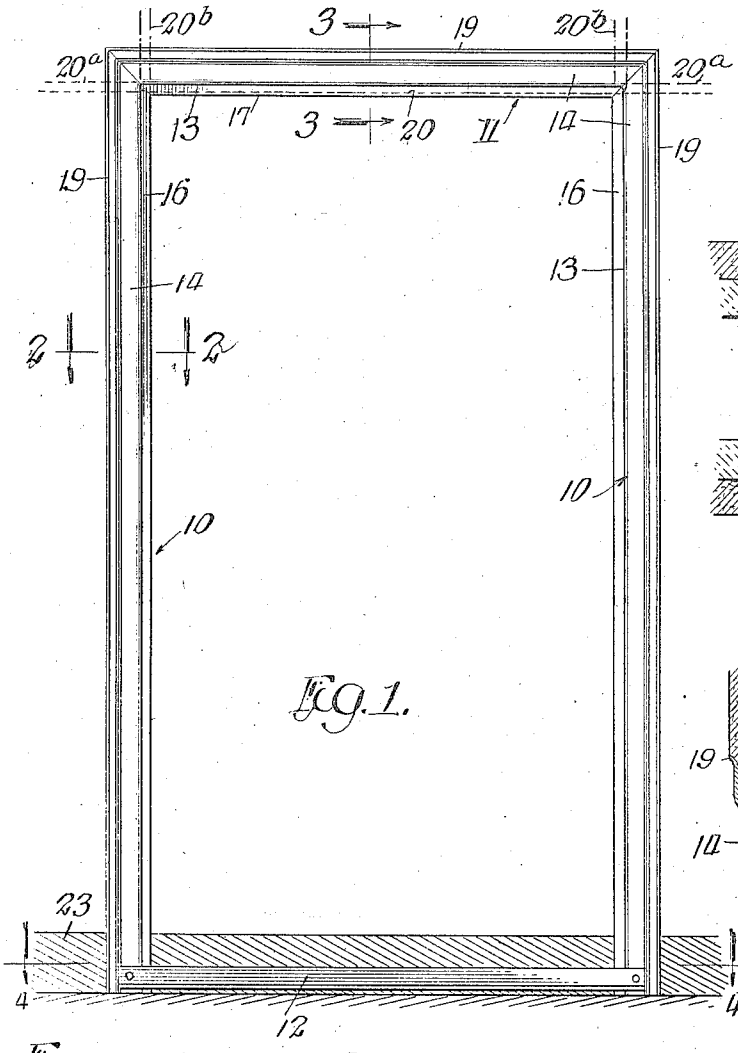

Fig. 1.

Fig. 2.

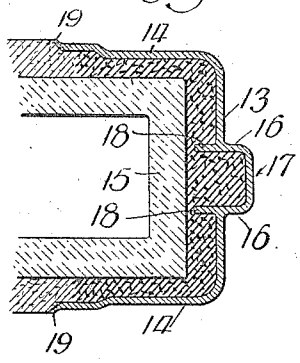

Fig. 3.

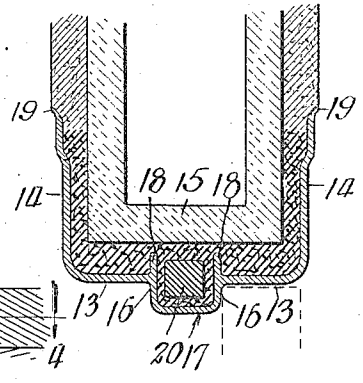

Fig. 4.

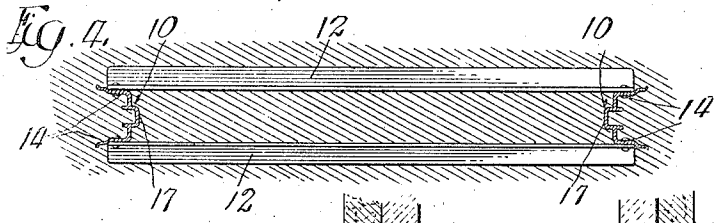

Fig. 5.

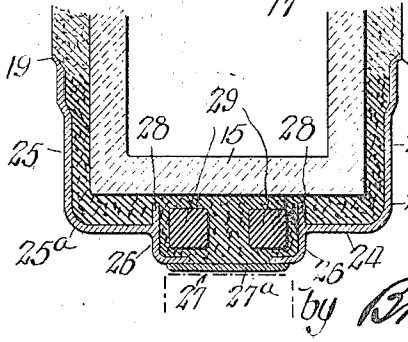

Witnesses:
P. H. Alfuds
J. R. Wilkins

Inventor
Paul Gerhardt
by Brown & Mellhope Attys

UNITED STATES PATENT OFFICE.

PAUL GERHARDT, OF CHICAGO, ILLINOIS.

METAL DOOR AND WINDOW FRAME CONSTRUCTION.

1,068,645. Specification of Letters Patent. Patented July 29, 1913.

Application filed May 4, 1912. Serial No. 695,023.

To all whom it may concern:

Be it known that I, PAUL GERHARDT, a citizen of the United States, and a resident of Chicago, in the county of Cook and State of Illinois, have invented certain new and useful Improvements in Metal Door and Window Frame Construction; and I do hereby declare that the following is a full, clear, and exact description thereof, reference being had to the accompanying drawings, and to the letters of reference marked thereon, which form a part of this specification.

This invention relates to improvements in metal frame construction for doors or windows and consists of the matters hereinafter described and more particularly pointed out in the appended claims.

My improved metal frame construction may be used both for door frames and window frames and as shown herein is illustrated as applied to door frames.

In the drawings:—Figure 1 is a view representing a door-frame made in accordance with my invention, the same being shown in front elevation. Fig. 2 is a view representing a horizontal section through one jamb member of the door-frame in a plane indicated by the line 2—2 of Fig. 1. Fig. 3 is a view representing a vertical section through the head member of the door-frame in a plane indicated by the line 3—3 of Fig. 1. Fig. 4 is a view representing a transverse section through the bottom ends of the jamb members of the door frame in a plane indicated by the line 4—4 of Fig. 1. Fig. 5 is a view representing a section similar to that shown in Fig. 3, of a frame member of modified construction.

My improved metal frame construction consists of transverse and upright members to form the frame and in the case of a door-frame, as shown in the drawings, comprises the upright jamb members 10, 10, a head member 11, and tie-members 12, 12, which connect the lower ends of the jambs together and hold them in proper spaced relation. Each frame member is made of metal which is rolled so as to be substantially U-shaped in cross-section, as clearly illustrated in Figs. 2 and 3, the transverse base of the U forming the face of the jamb and the legs of the U, the sides of the jamb.

13 indicates the face and 14, 14 the sides of the jamb, the latter embracing the marginal part of the wall 15. Said wall may be of tile or of any other familiar construction.

The face member 13 of the frame member is offset at each side of a longitudinal median line to form oppositely facing door-stops 16, 16 on its outer surface and a longitudinally extending channel 17 on its inner surface.

18, 18 indicate longitudinally extending, laterally spaced flanges or ribs which form extensions of the sides of the channel 17 and project inwardly beyond the face member 13.

At the free margins of the side members 14, 14 of the metal frame member are provided ribs 19, 19, which are faced in planes parallel to the planes of said side members and are slightly offset outwardly from said planes.

When the frame is in place the jambs rest upon the floor members, and where a cement floor 23 is used, are embedded therein and each frame member is located with its face member 13 spaced from the edge of the wall 15 and with its side members 14, 14 spaced at each side of said wall. The spaces between the marginal part of the wall and the metal frame are then filled with cement, concrete or plaster in the usual manner. In the transverse member or members of the frame and in the case of a door-frame in the head-member alone, there is embedded in the concrete contained within the channel 17, a rod or bar 20 which is made longer than the frame is wide so as to project laterally at each end beyond said frame. The laterally projecting ends 20^a, 20^a of the rod 20 (indicated by dotted lines in Fig. 1), are anchored in the wall so as to hold it rigidly in an upright position. If desired, the projecting ends of the rod 20 may be turned upwardly (indicated by broken lines as 20^b in Fig. 1) and anchored in the wall above the frame.

The tie-members 12, 12, as shown are made of angle-bars and are riveted to the side members 14 of the jambs of the door-frame near the lower ends thereof, and are embedded with said lower ends in the concrete which forms the floor.

The object of the offset ribs 19 is to protect the sides of the jamb from scratching or marring by the tools used when the plaster is placed on the wall adjacent said jambs. Said ribs being offset from the planes of the side members of the metal jamb form a ground for the plasterer and

prevent the tools used in plastering and the plaster itself from coming into contact with the jamb. This is an important feature since the metal frames are finished at the factory before installation and when enameled or provided with other expensive finish, it is expensive, and in some cases impossible, to refinish them after they are in place.

The rib of concrete which projects into the channel 17 greatly adds to the rigidity of the connection between the door-frame and the marginal part of the wall about the doorway and together with the extending ends of the bar 20 securely hold the door-frame in upright position.

I prefer to make the members of my metal frame construction in one piece but in case of walls of greater thickness requiring a wider face member, said frame members may be made of more than one piece. Such a construction is illustrated in Fig. 5. In this case 24 indicates the face of the frame member and 25, 25 the sides. 26, 26 indicate the offsets in the said face, 27 the channel, and 28, 28 the longitudinally extending flanges or ribs projecting inwardly from said face member. The channel 27 in this case is made very wide and the frame member is made in three parts, two parts 25^a, 25^a, each of which forms one of the sides and a part of the face including an offset 26 and a part of the channel 27 and a plate 27^a which forms the intermediate part of the channel face. Said parts are rigidly attached together by brazing or in any other convenient manner. In the case of such wide channels, two bars 28 are preferably used in the transverse members of the frame. If desired a bar or rod may also be used in the channel of the vertical jamb members.

I claim as my invention:—

1. A metal frame construction for doors or windows comprising frame-members, each substantially U-shaped in cross-section, each frame member having a face and two sides, and the free margins of the sides of said frame-members being provided with longitudinal ribs having exposed faces outwardly offset from said side to define the associated wall-planes and prevent the tools used in facing said walls from marring the surfaces of said sides.

2. A metal frame construction for doors or windows comprising frame members, each substantially U-shaped in cross-section, each frame member comprising a face and two sides and the face being offset intermediate said two sides to form a longitudinally extending channel, said frame member being provided with laterally spaced, longitudinal ribs or flanges forming inwardly projecting extensions of the sides of said channel and the free margins of the sides of said frame members being provided with longitudinal ribs having exposed faces outwardly offset from said sides to define the associated wall planes and to prevent the tools used in facing said walls from marring the surfaces of said sides.

3. A metal frame construction for doors or windows comprising frame members, each substantially U-shaped in cross-section, each frame member comprising a face and two sides and the face being offset intermediate said sides to form a longitudinally extending channel, said frame member being provided with laterally spaced, longitudinal ribs or flanges forming inwardly projecting extensions of the sides of said channel, in combination with a rod or bar adapted to be embedded within said channel and having ends projecting beyond said frame for anchoring in the walls about said door or window.

In testimony, that I, claim the foregoing as my invention I affix my signature in the presence of two witnesses, this 27th day of April A. D. 1912.

PAUL GERHARDT.

Witnesses:

GEORGE R. WILKINS,

TAYLOR E. BROWN.