(No Model.)

S. B. COSTON.

GRIDDLE GREASING AND OILING UTENSIL.

No. 396,860. Patented Jan. 29, 1889.

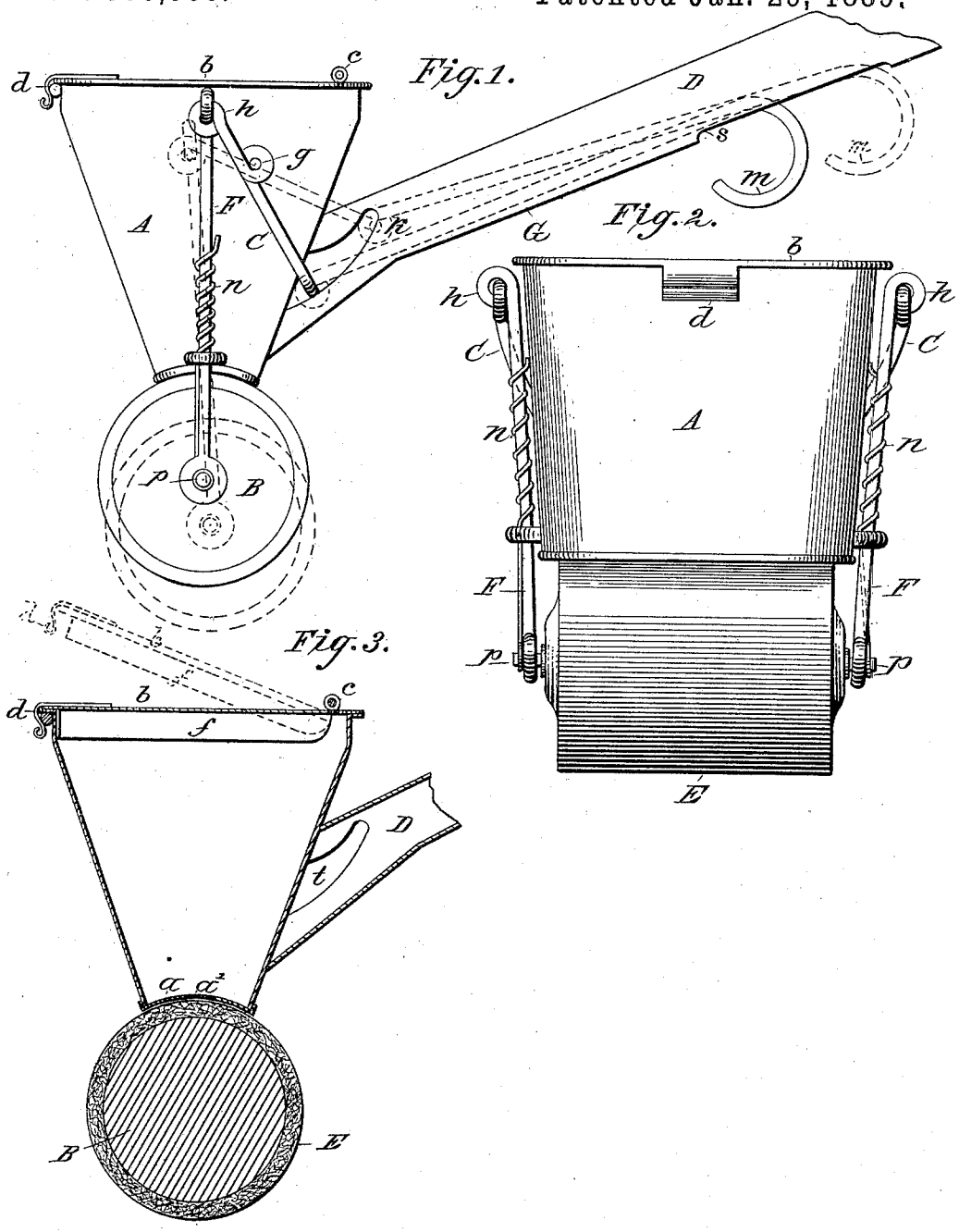

Witnesses:
A. S. Newton
B. et Coston

Inventor:
S. B. Coston

N. PETERS, Photo-Lithographer, Washington, D. C.

UNITED STATES PATENT OFFICE.

SAMUEL B. COSTON, OF SCRANTON, PENNSYLVANIA.

GRIDDLE GREASING AND OILING UTENSIL.

SPECIFICATION forming part of Letters Patent No. 396,860, dated January 29, 1889.

Application filed January 13, 1888. Serial No. 260,643. (No model.)

To all whom it may concern:

Be it known that I, SAMUEL B. COSTON, a citizen of the United States, residing at Scranton, in the county of Lackawanna and State of Pennsylvania, have invented a new and useful Griddle Greasing and Oiling Utensil, of which the following is a specification.

My invention relates to improvements in griddle greasing and oiling utensils for applying a lubricant to baking-surfaces and distributing oily or other fluids upon other surfaces; and the objects of my invention are, first, to provide a supplying can or box and a distributing-roller adapted to the purposes specified; second, to afford proper facilities for the adjustment of the supply-can and the roller to each other, so as to apply a lardaceous lubricant to a heated griddle, and to distribute oils and other fluids in similar manner to surfaces not heated.

The broad idea of my invention is the provision of a griddle-greaser and an oiling-utensil, consisting of a suitable can or box to carry a supply of greasing or oiling material, and having slotted, perforated, or woven bottom, and a roller provided with an absorbent and distributive surface so constructed and arranged with reference to the can-bottom that the roller may be separated from the bottom to allow a flow of the grease or oil from the can to the roller, or be brought in pressure-contact to retard the "flow." In order to attain these objects and to manufacture a greasing and oiling utensil of the foregoing general character in a convenient and simple manner, I have devised a construction of a character represented in the accompanying drawings and described in this specification.

In the drawings, Figure 1 is a side elevational view of a greasing and oiling utensil embodying my invention, and as it appears when in use. The dotted lines indicate the position of the roller when separated from contact with the can-bottom and the operating device which effects the same. Fig. 2 is a vertical front view of the supply-can, the distributing-roller, and the spring-controlled roller supports and bearings. Fig. 3 is a central sectional view through Fig. 2, and shows by dotted line a sectional view of the open lid of the supply-can.

Similar letters of reference indicate corresponding parts throughout the several views.

In the drawings, A represents a can or box, which may be of convenient construction and which is adapted to receive and carry a greasing or oiling material. The can is represented as conveniently made of sheet metal, oval in form at the top, oblong at the bottom, and provided with slotted, perforated, or woven bottom *a*, concave on the under side, so as to conform to the surface E of the roller, a hollow handle, D, a lid, *b*, hinged at *c*, with a rim, *f*, (see Fig. 3,) conforming with the shape of the can inside at the top, and a spring-catch, *d*, applied opposite to the hinge for fastening the lid.

B is the body of a roller, which may be of any suitable material. I make the roller and the can of tin, provided with a surface-covering, E, of cloth or other absorbent and distributive fitness, and is spring-supported on central journals, *p*, at each end by bearings in the sliding supports F.

C represents a lever, which, for convenience, I term a "follower," which rests on fulcrums *g*, attached to the sides of the can, and is connected with the roller-supports F by the eye *h* and with the operating-rod G, placed inside the handle D, by the eye *k*, the latter being provided with a finger-hook, *m*, which protrudes from the slot *s* in the under side of the handle D. The follower C, mounted upon the fulcrum *g*, is adapted to force the spring-controlled supports F downward by drawing back the rod G with the finger-hook *m*, thereby separating the roller from the can-bottom to allow a flow of the greasing or oiling material to be taken by the roller-surface E. Releasing the rod G causes the roller to be drawn up by the spiral springs *n* into pressure-contact with the can-bottom, so that the flow is retarded. This entire contrivance is one of convenience, and may be made in such manner as convenience of manufacture may dictate. If the use of butter, lard, or other lardaceous grease is desired as a lubricant for heated surfaces, the roller will become sufficiently heated in rolling thereupon to soften or melt such greasing material for its reception by the absorbent roller-surface. The hollow handle D is attached centrally to

the back of the supply-can, and is provided with a slot, *t*, (see Fig. 3,) to admit the connection and working of the arms of the follower C, as represented at *k*, Fig. 1. It also has the slot *s* in the under side, through which the finger-hook protrudes in convenient position to be reached by the hand of the operator.

I am aware that prior to my invention rollers have been made and used in connection with a fount or supplying device to carry and distribute lubricants and inking matter to other surfaces. I therefore do not claim such a combination, broadly; but,

Having thus fully described my invention, what I do claim, and desire to secure by Letters Patent of the United States, is—

1. In a griddle greasing and oiling utensil, the combination of the supply-can and distributing-roller connected by the spring-supported sliding guides F and roller-bearings, substantially as set forth.

2. The combination, in a griddle greasing and oiling utensil, of the can A, the distributing movable roller B E, connected by the springs *n* and sliding roller-supports F, and means for so connecting them with the roller and can that these are readily separated or brought into pressure-contact, substantially as described.

3. In a griddle greasing and oiling utensil, the combination of the can, the distributing-roller spring-supported and movable, and the lever-acting device or follower C, for separating the roller and can-bottom, as specified and set forth.

4. The combination of the supply- can, the movable roller, the springs and supports for the same, the follower and the rod G, and its finger-hook *m*, within the handle D, all for the purposes specified and substantially set forth.

5. The combination, in a griddle greasing and oiling utensil, of a supplying-can provided with slotted, perforated, or woven concave bottom and hollow handle, spring-supported movable roller journaled in the sliding supports F beneath the can-bottom, and provided with absorbent surface-covering E, spring-controlled roller supports and bearings, the springs *n*, connected by their upper end to the supply-can and to the roller-supports by their lower end, so as to draw the roller up in pressure-connection with the bottom of the can, the follower, and the operating-rod G, with its finger-hook, for the purpose of separating the roller, by pressure of the follower C, from contact with the can-bottom at will, all as substantially set forth.

In testimony whereof I have signed my name to this specification, in the presence of two subscribing witnesses, on this 11th day of January, A. D. 1888.

SAMUEL B. COSTON.

Witnesses:
M. W. LOWRY,
H. C. BUTLER.