April 18, 1933. C. FIELD ET AL 1,904,026

MANUFACTURE OF RESILIENT PADS

Filed June 12, 1929

Fig. 1.

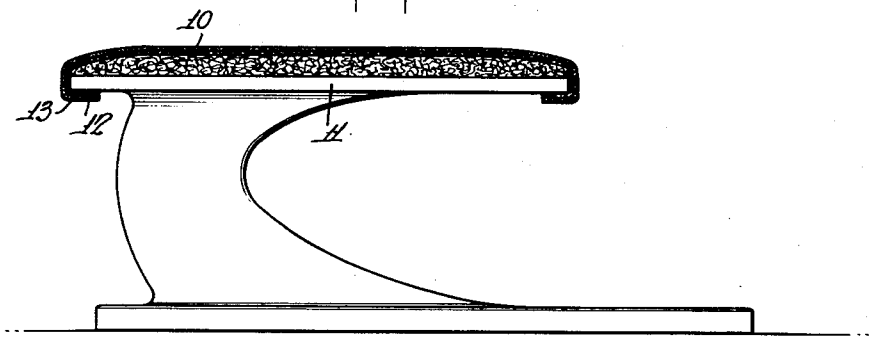

Fig. 2.

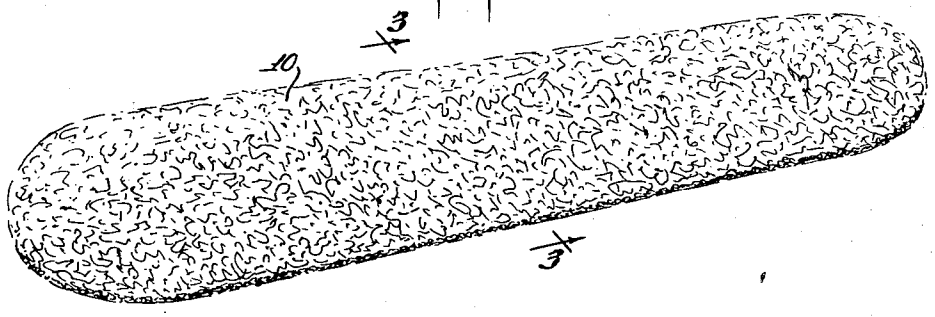

Fig. 3.

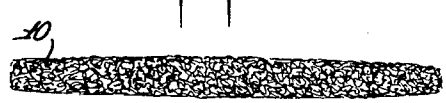

Fig. 4.

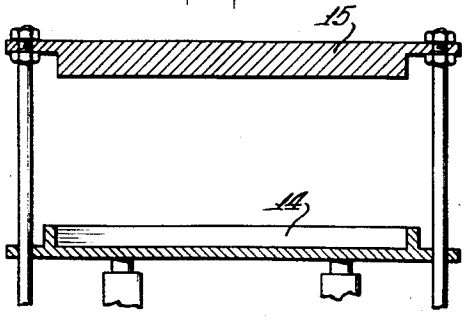

Fig. 5.

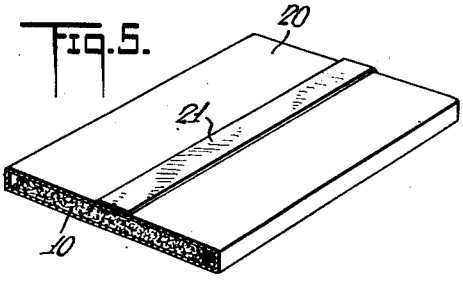

INVENTOR
Crosby Field
Clinton L. Campbell
BY
George C. Kleeser
ATTORNEY

A-126

Patented Apr. 18, 1933 1,904,026

UNITED STATES PATENT OFFICE

CROSBY FIELD, OF BROOKLYN, AND CLINTON L. CAMPBELL, OF SCARSDALE, NEW YORK, ASSIGNORS TO BRILLO MANUFACTURING COMPANY, INC., A CORPORATION OF NEW YORK

MANUFACTURE OF RESILIENT PADS

Application filed June 12, 1929. Serial No. 370,218.

The present invention is concerned with resilient pads which though preferably made from ordinary commercial grades of steel wool, have the approximately constant compression and resilience characteristics throughout long periods of use; with methods of producing them, and with packaging the pads for purposes of storage and shipment. The pads or mats are capable of a varied field of utility where relatively constant resilience under long repeated compressions is necessary for commercial success, but are especially adapted for embodiment in laundry or clothes press pads to supplement or replace the conventional spring cushions and other fibrous materials which are now commonly employed on the press bucks.

Objects of the invention are to provide a pad of this type which will be of uniform and enduring resiliency when subjected to often repeated, relatively high compressions; which will not develop rust in storage, and which when in use will effectively safeguard against breaking the most delicate buttons or injuring the finest fabrics which may be ironed by the press.

The resilient quality of steel wool is well known but no one has thus far succeeded in controlling this quality so as to make the pads sufficiently standardized and enduring for the particular purpose with which the present invention concerns itself. Our invention is based on the discovery that this is because no prior pads, whether for abrasive or for cushioning purposes, have been given initial compression substantially greater than the pressures which they are subjected to in use, and in most of them, the initial compression is not in the same direction as the use pressure. Consequently, where the use requires repeated relatively heavy pressures as in the laundry or clothes presses of the prior art, each pressure and release operates to bend a certain number of the fibers beyond the limit of elastic resilience, thereby giving more and more of them a permanent set, the result being that in a relatively short period of use, sometimes only a few months and sometimes only a few weeks, the thickness of the pad has been reduced to that of a mere sheet, and the range of resilience is so reduced as to render the pad inoperative for purposes above described, such as avoiding buttons or injury of fine fabrics. We have further discovered that the steel wool pads or mats can be rendered uniformly and enduringly resilient throughout a desired range of spring movement, and that this may be accomplished by making the initial pad of relatively great thickness and subjecting it to an initial pressure that is relatively enormous as compared with the ordinary pressures or stresses to which it is subjected in use. Thus, the initial set of the fibers of the pad so far exceeds that producible by use pressures, that the pad becomes dependable as to constant thickness and range of resilience.

We utilize this discovery by producing a pad or mat of wool which has been subjected to a comparatively high pressure in a forming die, the pressure being sufficient to impart to the steel wool mass a definite and substantially permanent contour. These pressures are in general far greater than is ever applied to steel wool scouring pads used for abrasive purposes and, in fact, are such as to render the fibers extremely stiff and far too brittle and too easily broken by pressures edgewise to the initial set, such as are always applied in ordinary use of scouring pads. Tests with these unprecedented pressures have demonstrated that there are limits of high forming pressure which must not be exceeded, for otherwise the mass will be permanently reduced to undesirable stiffness and hardness, flatwise as well as edgewise, and will not have a range of spring action such as is required for a spring cushion pad. In this connection it may be noted that the very delicate and relatively minute steel wool fibers, when bundled or bunched into a matted mass of interlaced intercurled fibrous material, will produce a mat having an astonishingly high elastic range and capable of withstanding compression in the order of a third of a ton or more per square inch without destruction of its resiliency.

In practice when forming a pad we spread the desired quantity of steel wool of fairly coarse grade, evenly on a table or in a die of

the proper size and shape and subject the mass to a compression which flattens it out into almost sheet like form. The mass has little tendency to lateral expansion even if laterally unrestrained. When the pressure is relieved the pad quickly springs back to a substantial thickness which for the preferred sizes of fiber and thickness of pad will not exceed three times the initial compression thickness of the sheet, so that in its expanded condition the resulting spring pad is of very substantial density.

If this pad is held in place on a press buck by the usual inner covering of flannel and tautly stretched outer covering of cotton fabric it will have no tendency to further expand in thickness and will as above suggested be of uniform resiliency in all directions under all ordinary pressures to which it may be subjected in the press, these pressures during use being commonly quite low as compared to the forming pressure initially applied on the pad, say about seven pounds per square inch.

In cases where the pads are to be stored for comparatively long periods of time before application to a press buck they will have a tendency to gradually increase in thickness. This tendency we overcome by packaging the pads in a shallow box which is of slightly less depth than the normal thickness of the pads and which holds the pads under slight compression during storage.

The pads, when on the press, are subjected to the usual high press temperatures which preclude the presence of moisture, and are furthermore enclosed by the flannel which substantially excludes air so that they have little or no tendency to oxidize or rust. During storage, however, and during manufacture the formation of rust or incipient rust must be guarded against. This we preferably accomplish by cutting the wool in the presence of a compound which completely coats it with a very thin paraffin film. Ordinary methods of cutting with oil are avoided to prevent the mass from developing undue greasiness under subsequent compression. Dry cutting methods are not satisfactory because they slow down the cutting process and wear out the cutting knives and do not prevent rust during storage.

When the pads are put in use the intense heat of the press quickly burns out some of the constituent elements of the paraffin which as above explained has primarily the function of preventing the formation of incipient rust during manufacture and storage of the pads, the residue of the paraffin forming a permanent black protective coating on the individual fibers of the steel wool, so that there is little or no tendency for them to rust in use.

The invention may be more fully understood from the following description in connection with the accompanying drawing, wherein

Fig. 1 is a sectional view showing one of the pads in place on a press buck;

Fig. 2 is a perspective view of the pad;

Fig. 3 is a transverse sectional view therethrough;

Fig. 4 is a diagrammatic sectional view of the forming press; and

Fig. 5 is a sectional view of the package.

The finished pad 10 as seen in Figs. 2 and 3 is about five-eighths of an inch thick and is held in place on the press buck 11 by the conventional inner layer of flannel 12 and the outer layer 13 of light cotton fabric.

An important feature of a steel wool pad formed in accordance with the present invention is that, due to its ready flexibility it may, if oversized, be folded around the edges of the press buck.

The means for holding these fabric layers tautly stretched so as not to wrinkle the goods being pressed and incidentally to hold the steel wool pad under slight compression are not in themselves our invention, may be entirely conventional and are therefore not shown.

We preferably use steel wool that has been made on the Field type of machine with special machinery described in the co-pending application of one of the inventors, Ser. No. 276,317, for "conveyor and storage apparatus for metal wool machines", filed August 3rd, 1928. The invention described therein indicates a method of obtaining the wool in a loose fibrous tangled mass of rather fluffy constituency. We do not, of course, limit our invention to wool made in this fashion, but such wool has been found preferable.

About three pounds of this fluff is gathered up, slightly compacted by hand and spread evenly in the female element 14 of the forming die mounted for instance on the plunger of a hydraulic press. In a particular case the three pounds of wool filled the female die to a depth of about six inches. Wool filled element 14 is then moved upwardly by the plunger into coaction with the male element 15 of the die and the material subjected to a pressure in the order of one hundred tons for a spring pad of about 300 square inches area or about 650 to 700 pounds per square inch which flattens the mass out into a very thin sheet, no clearance in fact being provided between the working faces of the members 14 and 15. When the pressure is relieved the flattened mat quickly expands to a thickness two to four times the minimum thickness under the forming pressure, dependent on the size of the fibers, and in a given case, the expanded thickness may be about five-eighths of an inch at which time its density is around 0.0135 pounds per cubic inch. It will be noted that in the above illustrative case where the forming pressure of

the pad is, say, 600 to 700 pounds per square inch, said pressure is approximately 100 times ordinary pressure applied by the buck in a laundry or clothes pressing machine. While this is by no means the lower limit of forming pressure that will give a useful density, it is to be noted that in all cases my invention requires that the initial forming pressure be vastly greater than the use pressures so that the pad will stand up under continued use pressure for long periods of time, that is, a year or years, as contrasted with a limit of a very few weeks or months, characteristic of steel wool pads which have not been given such initial forming pressure.

We have thus far been unable to find accurate limits for the effective compression range and density range although we have discovered that exceedingly high pressures, say around 850 tons or, say, 5,000 pounds per square inch, flatten and apparently weld the individual fibers of the mass together, completely killing all resiliency; also that pressures of less than fifty tons or 333 pounds per square inch do not give the desired "set" or more or less permanent form desired.

The pressures are subject to change in any event where larger charges of wool are used for a given area of die or where wool of other grades is used.

To prevent further expansion of the mat during storage and shipment we package them under slight compression in shallow boxes 20 of fiber board or corrugated paper board closed by the usual taped paper strips 21.

The pads embodying the invention and produced by our method may have various uses other than the specific one discussed herein. They are particularly suited for instance for use as floor mats under rugs and carpets.

With provisions such as those described above we have found that coarse wool commonly known as No. 3 grade gives the best results, although finer grade material might be used when the pressures of manufacture are not so high.

When used for laundry or clothes press purposes, the mats may either entirely replace the usual spring pads or may serve to supplement them. When used on presses which pass live steam through the fabric being pressed, it will be obvious that the wool should be effectively permanently rust-proofed.

We claim:

1. A method of making resilient pads of metal wool which includes subjecting a loose matted mass of wool in forming dies to a pressure in excess of one sixth of a ton per square inch, the quantity of wool being such that the wool is flattened out into a thin sheet under the dies and expands to a thickness of about three-quarters of an inch when the pressure is relieved.

2. As a new article of manufacture, a flat spring cushion pad of resilient wool having its fibers initially crushed down and set to a density approximating .01 pound or more per cubic inch.

3. A spring cushion for exposure to heat and steam, consisting of a pad or mat of dense but resilient metal wool, the individual fibers of the steel wool being coated with paraffin and having been set by compression substantially greater than 300 lbs. per square inch and substantially less than 5,000 lbs. per square inch.

Signed at Brooklyn, in the county of Kings and State of New York, this 10 day of June, A. D., 1929.

CROSBY FIELD.
CLINTON L. CAMPBELL.