R. G. FINLAY.

DEVICE FOR CLEANING, SPREADING, AND POLISHING.

APPLICATION FILED MAY 20, 1914.

1,186,088. Patented June 6, 1916.

2 SHEETS—SHEET 1.

Fig. 1.

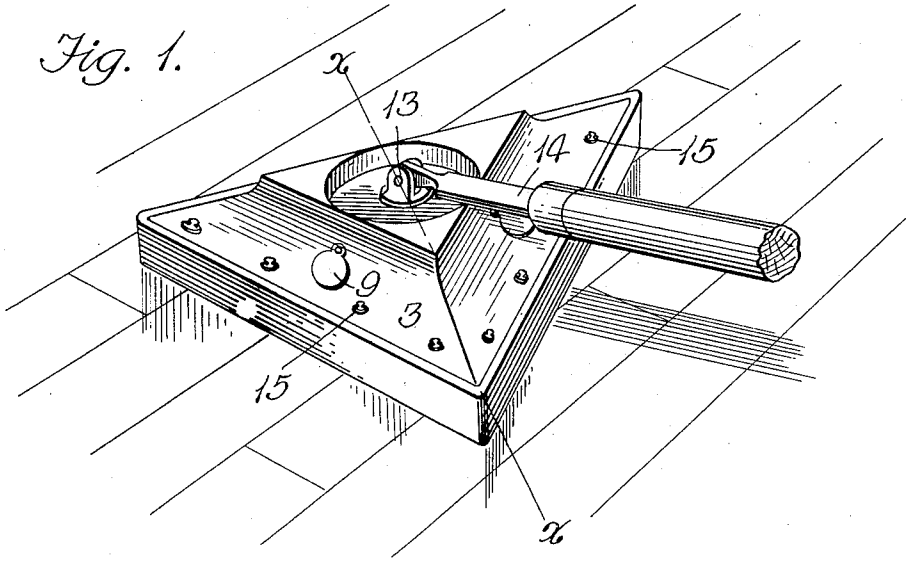

Fig. 2.

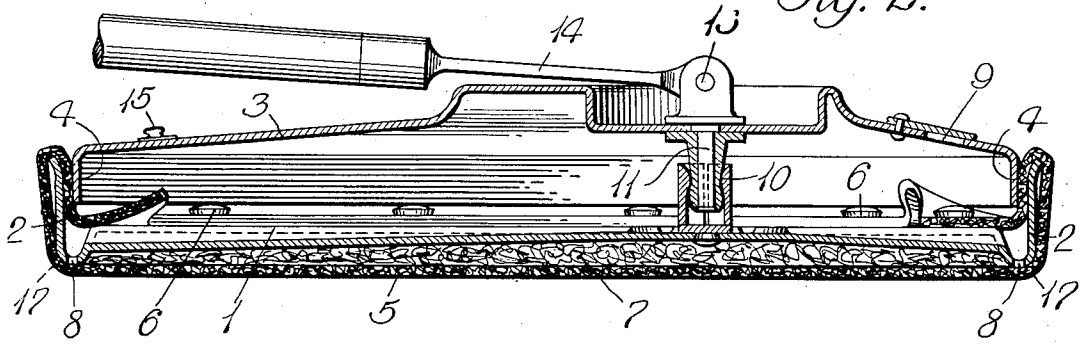

Fig. 3.

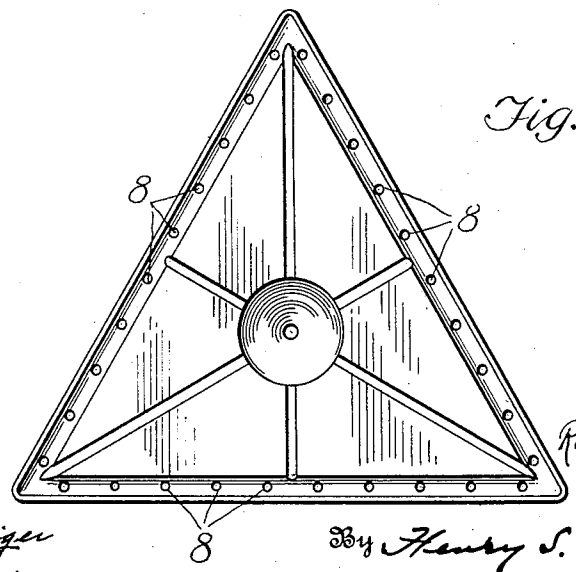

Witnesses

Chas. W. Stauffiger

W. T. McCurry

Inventor

Robert G. Finlay,

By Henry S. Blackmore

Attorney

R. G. FINLAY.

DEVICE FOR CLEANING, SPREADING, AND POLISHING.

APPLICATION FILED MAY 20, 1914.

1,186,088.

Patented June 6, 1916.

2 SHEETS—SHEET 2.

Fig. 5.

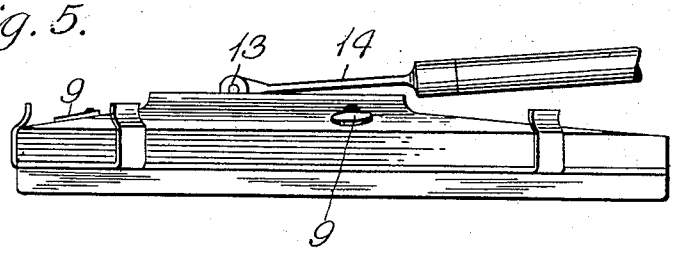

Fig. 6.

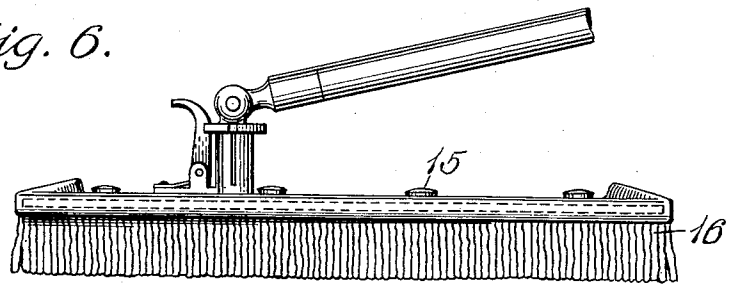

Fig. 7.

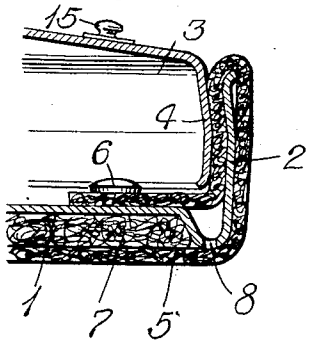

Fig. 8.

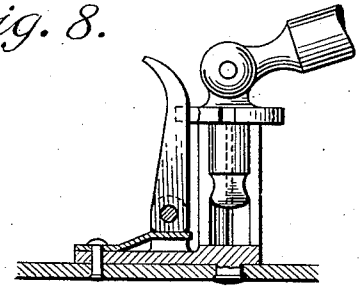

Fig. 4.

Witnesses

Chas W. Stauffiger

D. F. Mercer

Inventor

Robert G. Finlay,

By Henry S. Blackmore

Attorney

UNITED STATES PATENT OFFICE.

ROBERT GILMOUR FINLAY, OF CLEVELAND, OHIO.

DEVICE FOR CLEANING, SPREADING, AND POLISHING.

1,186,088. Specification of Letters Patent. Patented June 6, 1916.

Application filed May 20, 1914. Serial No. 839,668.

To all whom it may concern:

Be it known that I, ROBERT GILMOUR FINLAY, a citizen of the United States, residing at Cleveland, in the county of Cuyahoga and State of Ohio, have invented certain new and useful Improvements in Devices for Cleaning, Spreading, and Polishing, of which the following is a specification.

This invention relates to devices for spreading fluid, such as oil, over surfaces, cleaning windows, floors, etc., collecting dust and other purposes, and has for its object the arrangement of parts and combination of members whereby oil or other fluid may be held and delivered to contacting surfaces in an even and regular manner and in such a way that it may be transmitted to all points and around all obstructions, such as in the minutest corners and about circular or other intricate forms, where it may be desired to apply or introduce the oil or other substances or from which it is desired to remove and collect dust or other substances and polish the same, or for cleaning objects, such as windows, etc., and with these and other objects in view, the device comprises a revoluble, rotatable, or transversely movable device, having a reservoir for the fluid to be applied or used, means for delivering the same to contacting surfaces, means for introducing fluid into the reservoir, means for sliding or applying the device, means whereby a rotatable movement may be transmitted to the device when in operation, and means whereby the device may contact or reach the sharpest or minutest corners and follow the contour of the base, such as the baseboard of a flooring, deck of a ship, etc., when used. The combination of the various members and manner in which they are arranged and co-act to produce the desired result being hereafter more fully set forth, reference being directed to the accompanying drawing, in which,

Figure 1 represents an elevation of the device in perspective as it appears when in operation, Fig. 2 is a transverse vertical section on the lines *x*—*x* Fig. 1, Fig. 3 is a view of the base of the device showing from the interior the fluid feed means comprising a plurality of openings and ducts, Fig. 4 shows Fig. 3 with the felt spreading means attached and means for attachment, Fig. 5 is a perspective view in a horizontal direction of the device, illustrating the means of attachment of the spreader or cleaner, Fig. 6 shows the device in combination with a dust collecting member, Fig. 7 is an enlarged view illustrating the means or fastening member for securing the tread, and illustrating the relation of the tread to the fluid feed member, and Fig. 8 is a view showing the method of locking the handle to a dry duster.

Similar numerals of reference indicate corresponding parts in the various views.

Referring to Fig. 2 the numeral 1 indicates the reservoir of the device which specifically comprises a triangular basin provided with upward flaring or extending sides 2. This basin is provided with the cover 3 having the downwardly extending portion 4 adapted to extend into the basin or reservoir 1, to form an anchoring means for the cushion 5, and at the same time act as a seal for the device. The porous cushion tread and feed device 5 preferably comprises a felted cloth adapted to cover the bottom of the device and extend up over the side of the extensions 2 of the reservoir or basin 1 and down into the same, where it is anchored by the anchoring means of the cover 3 and the basin 1 co-acting with each other to form a spring fastening when placed together, and also provide a means for stretching and securing the porous tread in a tightly stretched condition. Located between the porous tread 5 and the bottom of the reservoir or basin 1 is the absorbent feed pad 7 which acts to absorb, retain, and deliver the fluid to be supplied for the purpose desired, such as oil, or composition for oiling, polishing, or dusting floors, or water for cleaning windows or other purposes. The fluid is supplied to the pad 7 from the reservoir or basin 1 through suitable openings in the bottom as indicated at 8 Fig. 3, and is introduced into the reservoir or basin 1, by removing the cover 3 or through a suitable closed opening 9.

To secure the normal sealing and coupling of the basin and the cover in such a manner as to simultaneously act as a means for securing the porous tread and anchoring members together, it is advisable to have the upward extension 2 of the basin and the downward extending member 4 of the cover 3 so shaped or fashioned that they will co-act with each other as to form a spring actuated closure as shown in Fig. 7.

The cover 3 is provided with the means 10 for securing the pivot attachment 11 of

the handle 12, in such a manner that a horizontal rotary motion may be imparted to the device when in use, the pivot attachment 11 being secured to the handle through the hinge device 13, by which means the handle may be elevated or lowered during the employment of the device, and the communication extension 14 of the handle is preferably of a flattened form for a sufficient length to allow the handle to be lowered to a substantially horizontal position without interfering with the rotary movement of the device.

It will be noted that the swivel bearing adapted to unite the shoe with the handle or means of projection comprises a pin 11 which co-acts or coöperates with a depending split sleeve 10, extending from the top or cover 3 and anchored thereto. By inserting the pin 11 into the split sleeve 10 the sections of the sleeve are forced apart and as the pin extends beyond the sleeve the spring sections of the split sleeve close in on the pin and over the rounded head or end of the pin, thereby forming a movable anchorage for the pin in such a manner as to removably secure the parts and provide a means for the revolution of the shoe on the pin at an angle transverse of the handle, and the shoe is also provided with a guide into which the sleeve projects and acts to maintain the same in a vertical position. When the pin 11 is withdrawn the sections of the sleeve between the splits therein spread and allow the head of the pin 11 to pass through and out, thereby disengaging the handle from the spreading device. Intervening between the pin and the handle is the bearing 14 which is hinged in a pivoted manner to the outer end at 13 to the pin bearing. The utility of this combination of shoe and means of projection may be understood and appreciated from the fact that the shoe may be readily revolved and moved in any convenient direction upon the surface to which it is applied and that the device will follow the boundary of the floor to the baseboard or of any contacting obstruction whereby the sharpest corners or most complicated curves may be followed and their surfaces or walls reached by the fluid delivering shoe of the combination or device.

It will also be noted that the fabric comprising the shoe passes over the upward extending walls of the reservoir and down into the reservoir forming a wick or capillary supply means for conveying the oil or other material from the reservoir to the shoe, which wick or capillary means is secured between the cover and the reservoir by means of the co-acting spring members of the upwardly extending walls of the reservoir and the downwardly projecting parts of the cover; this spring actuated means of holding the wick or capillary feed member also acts by means of the pressure and release thereof during the employment of the device through pressure applied in projecting or moving the device by means of the handle, as a pump acting means for augmenting the capillary feed through the pinching and release thereof of the capillary feed member between the walls of the cover and the reservoir.

It will be noted that one of the important features of the present invention resides in the fact that it is provided with a side or plurality of sides of substantially straight character or form, such as a triangle, whereby in its use it readily reaches the sharpest corners and points residing therein and automatically revolves or moves in accordance with the contour or shape of the wall or other obstruction communicating with the floor, with which it may come in contact in a direction to make the closest contact therewith and supply the desired ingredients employed thereto.

The device is also provided with the means, such as the anchoring buttons 15, for securing the tasseled member 16, as shown in Figs. 2 and 6.

In employing the device for oiling and polishing floors, the various members are assembled by first adjusting the porous pad 7 below the bottom of the reservoir or basin, which pad is suitably formed or fashioned with relation to the bottom of the basin so that when the porous tread 5 is stretched over it a flat base will be secured with sharp angular edges 17. The porous tread member is then placed over the base of the device in contact with the porous pad 7, extending over the outside and down the inside of the upward projection of the basin 2 and anchored by the device 6 on the inner side of the bottom. A suitable quantity of oil or polishing fluid is then introduced into the reservoir or basin 1 and the cover 3 is forced downward into the reservoir or basin thereby stretching the tread member 5 taut over the bottom of the pad and securing the same together with the top to the basin, by the spring actuated effect of the co-acting side projection of the top 4 and basin 2, and with the intervening section of the porous member 5.

As soon as the fluid in the device has been suitably supplied to the feed pad 7 and the porous tread 5 from the reservoir 1 through the openings 8 the device is placed on the floor which it is desired to oil or polish, and by sliding the device backward and forward a horizontally movable, rotatable, or revoluble movement is imparted and the oil or polish is supplied or applied to the floor in a uniform and perfect manner.

When the device meets an obstruction it assumes a rotary motion and follows the boundary or contour of the obstruction

thereby reaching the sharpest and minutest corners and in like manner it will follow the direction of the baseboard of the flooring so that the point of contact with the baseboard, surface or obstruction is facilitated and all parts thoroughly reached.

The triangular form or shape of the device makes it particularly adaptable for reaching sharp corners or angles and in its rotary movement permits it to describe and reach almost any contacting boundary of the most intricate and complicated form. As the reservoir or basin becomes depleted of oil or polishing fluid more may be supplied at any time by opening the supply closure 9 and pouring fluid therethrough.

If the device is employed for the purpose of cleaning windows or similar purposes, it is obvious that water or other fluid will be employed instead of oil, and the operation carried on as afore described.

In order to clean the porous tread, all that is necessary is to withdraw the cover and remove the tread from the anchoring devices 6, after which it may be taken off and washed and replaced, or in case the same material is to be employed again and the device employed for a similar purpose, all that is necessary to clean it is to dip or submerge it in a cleaning fluid, and impart to the device a horizontally rotary movement when the material, such as dirt and dust, will be instantly removed by the combined action of the fluid and centrifugal force induced by the rotary movement of the device.

To further the utility of the device as a dusting factor, it is advisable to attach to the device a porous tasseled dust collecting member 16, secured by the fastening members 15 as shown in Figs. 2 and 6.

Some of the uses to which this device may be applied may be noted as the spreading of oil or other substance upon floors, decks, etc., also for polishing or waxing the same, the cleaning of floors, decks, etc., by employing soap, water, or other material, the collecting of dust from walls, floors, carpets, or other articles, and for many other purposes.

It will be noted when the shoe of the spreading or polishing device is in operation that a horizontally movable, rotatable, or revoluble movement is imparted to it and that the motion is transverse of the moving handle and in contradistinction to and from the vertical movement which the handle may describe when hinged to the shoe or foot member of the device in its upward and downward movement describing variable angles when being pushed forward or drawn backward during its employment.

Having now described my invention, what I claim is:—

1. In a device for cleaning, spreading, and polishing, the combination of a fluid supplying reservoir, a shoe having a porous tread, capillary means for supplying fluid from the reservoir to the tread, a projecting means removably joined to the reservoir and the shoe members in such a manner that a rotary motion may be imparted thereto in a direction transverse of the projector, said member comprising a pivot bearing secured in an attachable and detachable manner in a split sleeve and provided with a hinged member intervening between the projector and the pivot bearing.

2. In a device for cleaning, spreading, and polishing, the combination of a fluid supplying reservoir provided with upwardly extending springing walls, a cover therefor provided with downwardly projecting walls, a capillary fabric extending from the reservoir and forming a porous tread secured between the upwardly extending walls of the reservoir and the downwardly extending walls of the cover, a projecting means removably joined to the reservoir and the shoe members in such a manner that a rotary motion may be imparted thereto in a direction transverse of the projector, said member comprising a pivot bearing secured in an attachable and detachable manner in a split sleeve and provided with a hinged member intervening between the projector and the pivot bearing.

3. In a device for cleaning, spreading, and polishing, the combination of a fluid supplying reservoir, a shoe having a porous tread, provided with a plurality of substantially straight sides, capillary means for supplying fluid from the reservoir to the tread, a projecting means joined to the reservoir and the shoe members in such a manner that a rotary motion may be imparted thereto in a direction transverse of the projector, and a hinged member intervening between the projector and the rotary adjoining member.

4. In a device of the character described, the combination of a shoe provided with a fluid supply container, comprising dish shaped upper and lower members, a capillary fabric folded over the lower member forming a porous tread and clamped in place by the telescoping upper member in such a manner that a fluid in the container will be fed to the porous tread, means for projecting the shoe, and intervening socket bearing means for joining the projector to the shoe in such a manner that the shoe may be rotated in a direction transverse of the projector.

5. In a device of the character described, the combination of a shoe provided with a fluid supply container, comprising dish shaped upper and lower members, a capillary fabric folded over and into the lower member and held by the upper member, forming a porous tread, in such a manner that a fluid in the container will be fed to the porous tread, means for projecting the

shoe, and intervening socket bearing means for joining the projector to the shoe in such a manner that the shoe may be rotated in a direction transverse of the projector.

6. In a device of the character described, the combination of a shoe provided with a fluid supply container, comprising upper and lower members and a capillary fabric folded over and into the lower member and held by the upper member in such a manner that a fluid in the container will be fed to the porous tread, means for projecting the shoe, and intervening socket bearing means for joining the projector to the shoe in such a manner that the shoe may be rotated in a direction transverse of the projector.

7. In a device of the character described, the combination of a shoe provided with a fluid supply container, comprising upper and lower members and a capillary fabric folded over the lower member, extending between said members and held thereby, forming a porous tread, in such a manner that a fluid in the container will be fed to the porous tread, means for projecting the shoe and intervening socket bearing means for joining the projector to the shoe in such a manner that the shoe may be rotated in a direction transverse of the projector.

In witness whereof, I affix my signature in the presence of two witnesses.

ROBERT GILMOUR FINLAY. [L. S.]

Witnesses:

VAL B. RULE,

F. L. WHEITMER.