Nov. 9, 1971 R. K. GARDNER ET AL 3,618,468

RECIPROCATING AIR MOTOR EXHAUST ASSEMBLY

Filed June 24, 1969 3 Sheets-Sheet 1

FIG. 3.

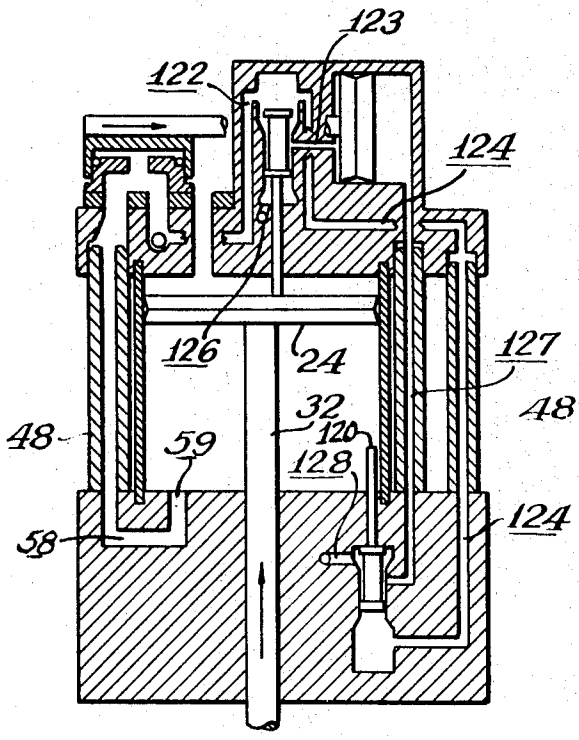

FIG. 4.

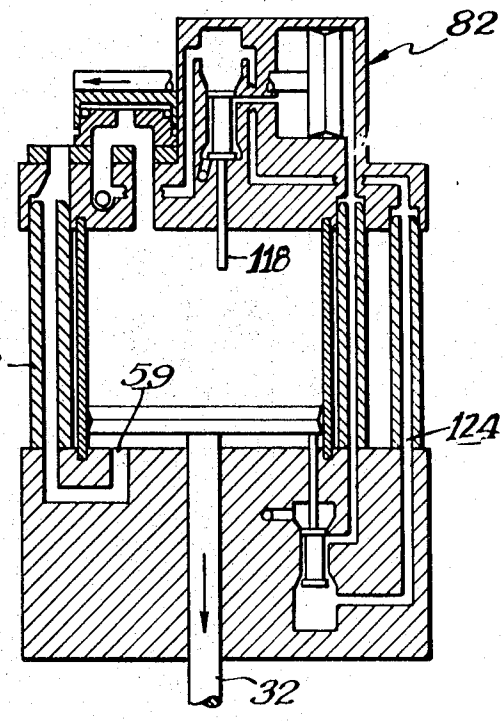

FIG. 1.

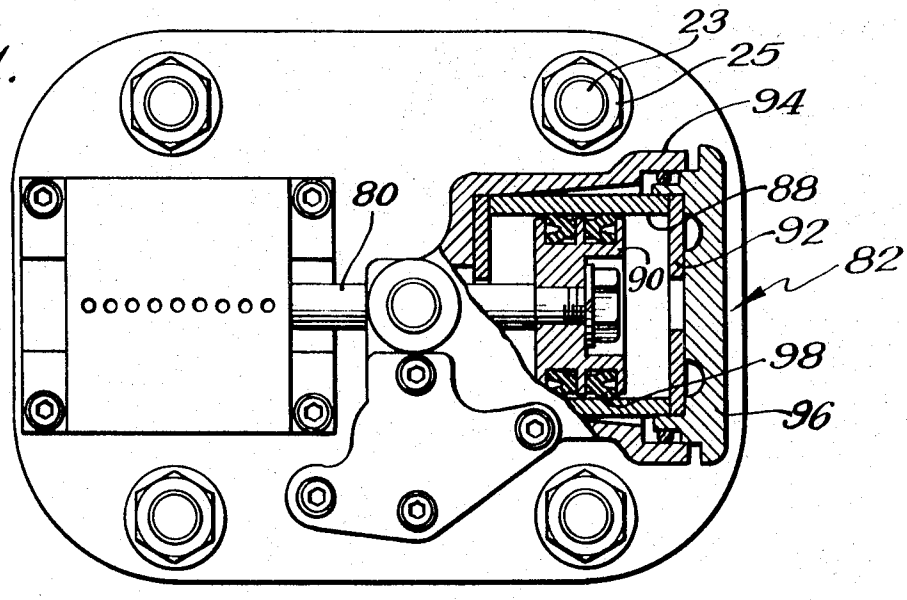

Inventors:
Richard K. Gardner
Wilbert G. Kautz

By Bair, Freeman & Molinare
Attys.

Nov. 9, 1971 R. K. GARDNER ET AL 3,618,468

RECIPROCATING AIR MOTOR EXHAUST ASSEMBLY

Filed June 24, 1969 3 Sheets-Sheet 2

FIG. 2.

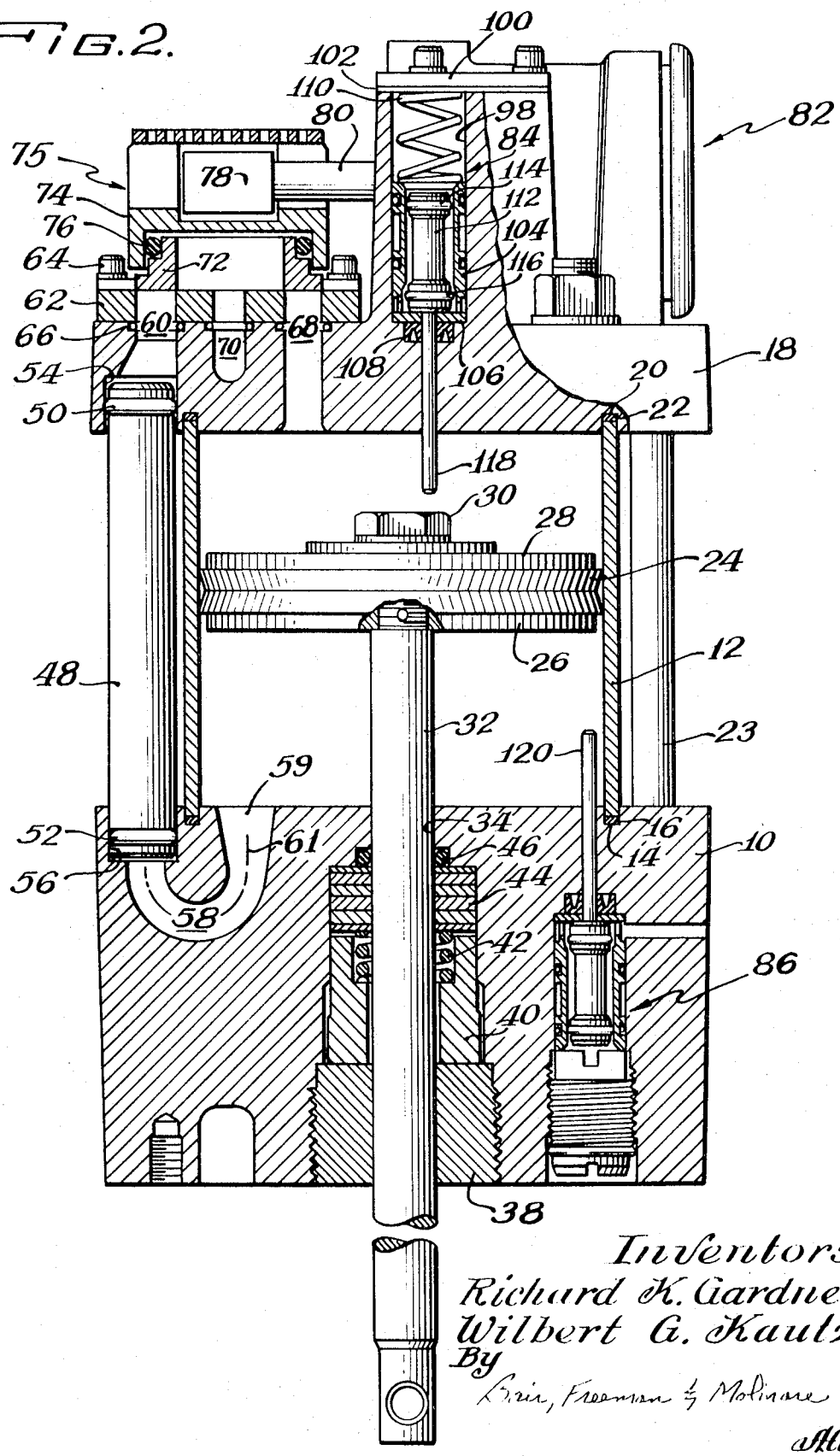

Inventors:
Richard K. Gardner
Wilbert G. Kaulz
By
Lair, Freeman & Molinare
Attys.

RECIPROCATING AIR MOTOR EXHAUST ASSEMBLY

Filed June 24, 1969 3 Sheets-Sheet 3

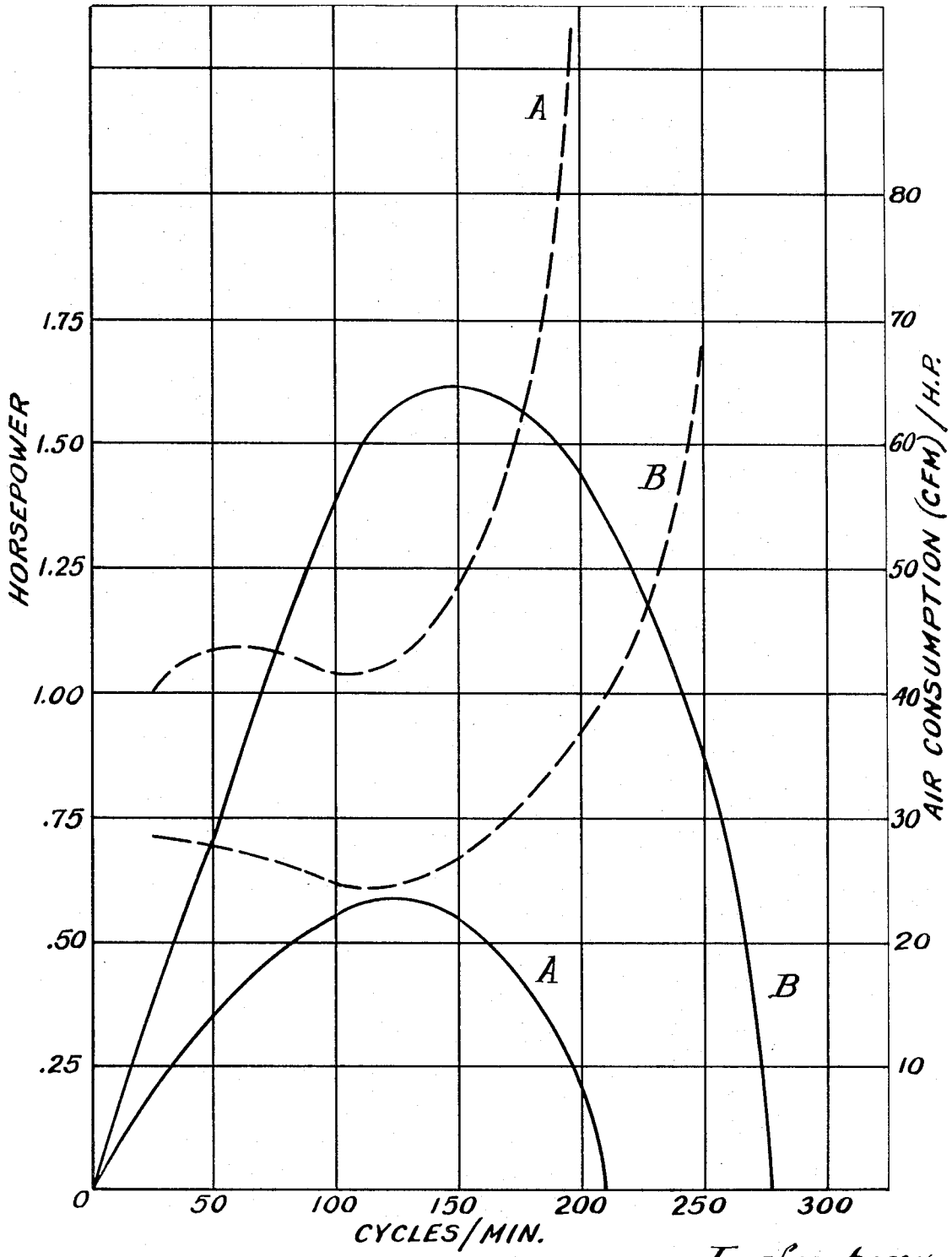

FIG. 5.

Inventors:
Richard K. Gardner
Wilbert G. Kautz
By Lee, Freeman & Mathews
Attys.

United States Patent Office 3,618,468 Patented Nov. 9, 1971

3,618,468

RECIPROCATING AIR MOTOR EXHAUST ASSEMBLY

Richard K. Gardner, Montpelier, and Wilbert G. Kautz, West Unity, Ohio, assignors to The Aro Corporation, Bryan, Ohio

Filed June 24, 1969, Ser. No. 836,037
Int. Cl. F01l 25/06
U.S. Cl. 91—306 2 Claims

ABSTRACT OF THE DISCLOSURE

A reciprocating piston air motor with a pilot piston operated slide valve that admits air alternately to opposite ends of the drive cylinder of the air motor through separate straight air passages which also serve as exhaust passages. The position of the drive piston is sensed by stems extending from spool valves positioned at opposite ends of the drive piston cylinder chamber. The spool valves control the supply and exhaust to the pilot piston, thereby controlling the slide valve and consequently pressure to the drive piston.

BACKGROUND OF THE INVENTION

This invention relates to an improved, reciprocating, fluid driven motor, and in particular to a reciprocating, fluid driven motor that includes a pilot operated slide valve for reversing the direction of the main drive piston of the motor.

Reciprocating type fluid driven motors are common. Also quite common is a reciprocating motor in which a slide valve alternates between two positions to provide for passage of fluid to one end or the other of the drive piston of the motor. In the past, however, there have been some drawbacks in such motors. For example, the power of such motors have been restricted because of icing. Icing occurs when the exhaust lines from the motor become clogged with ice that forms as moisture in the air condenses and freezes due to the rapid expansion of the compressed air during exhaust from the motor. Freezing usually occurs in bends or restrictions in the exhaust lines leading from the air motor and results in blocked air passages. This is just one of the problems that may be encountered with a reciprocating type fluid motor.

SUMMARY OF THE INVENTION

In a principal aspect the present invention of an improved fluid driven, reciprocating motor provides a cylinder head for the motor which includes the fluid inlet and exhaust passages and cooperates with a control valve through which the fluid is directed against one end or the other of the drive piston of the motor. The control valve is pilot operated by means for sensing the position of the piston within the cylinder chamber.

It is thus an object of the present invention to provide an improved, reciprocating piston, fluid driven motor.

It is a further object of the present invention to provide a reciprocating piston fluid driven motor with increased power by providing substantially straight and enlarged inlet and exhaust passages from the opposite ends of the drive cylinder chamber of the motor.

Still another object of the present invention is to provide a reciprocating, fluid driven motor which includes means for sensing the position of the drive piston of the motor in order to control reversing of the motor and increasing the speed and efficiency of the motor.

These and other objects, advantages and features of the invention, will be set forth in greater detail in the description which follows.

BRIEF DESCRIPTION OF THE DRAWING

In the detailed description which follows reference will be made to the drawing comprised of the following figures:

FIG. 1 is a top plan, partially cut away view of the improved motor of the invention;

FIG. 2 is a cross sectional view of the motor shown in FIG. 3 taken substantially along the line 2—2 in FIG. 3;

FIG. 3 is a schematic cross sectional view of the improved motor of the invention with the drive piston approaching the cylinder head end of the motor;

FIG. 4 is another schematic cross sectional view showing the drive piston at the opposite end of the cylinder chamber from that shown in FIG. 3.

FIG. 5 illustrates in graph form comparative data for an old motor, A, and a new motor, B.

DESCRIPTION OF THE PREFERRED EMBODIMENT

Attention is initially directed to FIGS. 1 and 2 which show the construction of a preferred embodiment of the invention. Following this, a description of the mode of operation of the invention is given with reference to FIGS. 3 and 4 for assistance in understanding the cycle of operation of the air motor.

The motor includes a base **10** with a main drive cylinder **12** mounted in a circumferential slot **14** defined in the base **10**. A sealing material, for example, a rubber gasket **16** is positioned in the slot **14** between the cylinder **12** and the base **10**. Positioned on top of the cylinder **12** is a cylinder head **18** which also includes a circumferential slot **20** with a gasket **22** for receipt and sealing of the cylinder **12**. Threaded tie rods as at **23** and nuts as at **25** secure the base **10** and head **18**.

A main drive piston **24** is positioned within the cylinder **12** and connected by means of piston washers **26** and **28** and a hub nut **30** to a piston rod **32**. Thus, the rod **32** travels in response to the movement of the piston **24**. The rod **32** passes through a rod aperture **34** in the base **10**. An annular plug **38** is threadably inserted in the base **10** to hold a block **40** in position to bias a spring **42** against sealing washers **44**. The washers **44** in combination with an O-ring **46** cooperate to provide a seal about the rod **32** during movement of the rod **32**.

Also attached and positioned between the base **10** and head **18** is a straight line tube **48** which is sealed by means of O-ring **50** and **52** in counterbored openings **54** and **56** in the head **18** and base **10** respectively. An inlet or exhaust passage **58**, depending upon direction of the piston **24** movement is defined in the base **10**. The passage **58** leads from the interior of the cylinder **12** through the cylinder port **59** to the tube **48** and is substantially of a uniform diameter. The diameter of passage **58** is substantially equal to the internal diameter of the tube **48**. Passage **58** is defined by a center line axis **61** which has a substantially constant radius at least equal to the diameter of the passage **58**. The passage **58** flares outwardly in a frusto-conical shape at the cylinder port **59**.

The opposite end of the tube **48** connects with a straight line passage **60** through the head **18** and a valve plate **62**. The valve plate **62** is attached to the head **18** by means of screws as at **64** with O-ring seals as at **66** to insure an air-tight seal between the plate **62** and the head **18**.

The head **18** and valve plate **62** also include an inlet passage **68** leading to a cylinder port **69** at the end of the cylinder **12** opposite the passage **58**. The passages **58** and **68** alternatively act as inlet and exhaust passages to the cylinder **12**. An external fluid or air supply passage **70** is also provided for the head **18** leading through the plate **62**.

Positioned for slidable movement on the plate **62** is an insert **72**. A valve cover **74** is positioned over the insert

72 and a seal is effected therebetween by means of the O-ring 76. This assembly forms the slide valve generally shown at 75. A collar 78 connected to a pilot piston rod 80 is positioned for engagement with the cover 74 to provide coincident movement of the valve cover 74 and insert 72 in response to movement of the rod 80. In the position shown in FIG. 2, the insert 72 does not provide connection of the supply passage 70 with either one of the inlet passages 58 or 68. Movement of the insert 72 to the right would provide a pressure or driving supply of fluid through the passage 68 to the top of the piston 24. Moving the insert to the left would provide a fluid supply through passage 58. Exhaust is effected through that passage 68 or passage 58 not connected with the supply passage 70. This arrangement is distinguished from the common fluid motor arrangement wherein the exhaust passages are alternately connected by means of a slide valve to a single exhaust port with the fluid inlet then connecting to the passage not exhausting.

The exhaust passage 58 and 68 in each case is substantially a straight line exhaust. Moreover, the diameter of the exhaust passages 58 and 68 is substantially constant and large in respect to prior art constructions. The cross sectional area of the passages is preferably about $1\% \pm 0.2\%$ of the cross sectional area of the cylinder chamber. This compares with an average of 0.5% area ratio in older motors.

Although increasing passage size has been known to improve anti-icing characteristics, the combination of large and straight line passages as at 68 and 58 create greater operating efficiency for the reciprocating motor and reduce the possibility of "icing." Also by ducting the exhaust passages 58 and 68 directly into the atmosphere, greater efficiency is realized. The motor may thus run at greater speeds with greater efficiency than prior motors of this type as can be seen by referring to FIG. 5.

FIG. 5 illustrates comparative data for an old or prior art motor, A, and a new motor, B, which utilizes the present invention. The dashed lines have as their ordinate the air consumption in cubic feet per minute per horsepower. This is the right hand ordinate in FIG. 5. The solid lines have as their ordinate horsepower. This is the left hand ordinate. The abcissa for the fig. is cycles per minute. In each case the motor was utilized to pump fluid having substantially the same viscosity which for FIG. 5 was less than 1 poise. Also in each case the line pressure to the motors was 120 p.s.i. The data is plotted for a motor having a 3¼-inch bore. With the new motor, B, the peak horsepower is almost three times greater and is provided over a much greater range than with the prior art motor, A. Also, the air consumption of the new motor is almost one-half of the prior art motor. Thus, the new motor is almost two times as efficient.

The control means for effecting movement of the slide valve 75 includes the pilot piston assembly 82 and spool valve assemblies 84 and 86. As shown in FIG. 1 the pilot piston assembly 82 includes a pilot cylinder 88 having therein a pilot piston 90 attached to the rod 80 for reciprocating movement. A bumper 92 is provided at one end of the cylinder 88. The cylinder 88 is held in a housing 94 by means of a cap 96. The pilot piston 90 includes seals 98 between the piston 90 and cylinder 88.

Each spool valve assembly 84 and 86 is constructed in a similar manner. Thus, assembly 84 includes a valve chamber 98 with a cover 100 and gasket 102 over the chamber. A valve insert 104 is positioned in the chamber 98 and is biased against a valve washer 106 and seal 108 by means of a spacer spring 110. A spool element 112 includes O-rings 114 and 116 at its opposite ends. Extending from the end of the spool valve element 112 nearest drive piston 24 through an opening in the head 18 is a rod or stem 118. The rod or stem 118 is positioned to engage the piston 24. The other spool assembly 86 is constructed in a similar fashion and also includes a rod or stem 120 for engaging the piston 24.

As illustrated in FIGS. 3 and 4, fluid or pneumatic passageways are provided to the various sides of the spool valve assemblies 84 and 86 and the pilot piston 90. Thus, air, for example, supplied through the inlet or supply passage 70 passes not only through supply passages 58 and 68 depending upon the position of the slide valve 75, but also passes through a channel 122 in the head 18 to pressurize the upper side of the top spool valve assembly 84. Inlet pressure is also supplied from this point through a channel 124 to the lower end of spool valve assembly 86. The spool valve assembly 84 interconnects one side of pilot piston 90 through a channel 123 with either supply inlet 70 or an exhaust outlet 126. Spool valve assembly 86 connects the opposite side of pilot piston 90 through channel 127 with either supply inlet 70 through channel 122 and 124 or an exhaust outlet 128.

In operation, air entering at the air supply or inlet 70 travels through the slide valve 75 and the tube 48 as shown in FIG. 3 forcing the piston 24 to the up position. Air above piston 24 exahusts through the port 68. When the piston 24 reaches its extreme up position it engages rod 118 forcing the spool valve 112 into an up position, closing passage from channel 123 to exhaust 126 and allows air to enter from channel 122 through channel 123 to force the pilot piston 90 to the right. Simultaneously, the side valve 75 moves to the right as illustrated in FIG. 4. The opposing air to the right of the pilot piston 90 escapes through the channel 127 and out through the exhaust 128.

After the slide valve 75 has moved, air travels down through inlet port 68. Air below the piston 24 exhausts through the passage 58, tube 48 and passage 60. Air pressure on top of spool valve 112 returns spool valve 112 and rod 118 to original position connecting channel 123 to exhaust 126. When the piston 24 reaches its extreme lower position, it engages the rod 120 causing the spool valve assembly 86 to direct air through channel 127 from channel 124 to the opposite side of pilot piston 90. Air exhausts from the left side of the pilot piston 90 through channel 123 and out exhaust 126.

The stems or rods 118 and 120 which sense the end of the stroke to operate the slide valve 75 may be variable in length. It has been found advisable to reverse the stroke before the piston 24 bottoms out. The piston 24 then cushions on air rather than bottoming out. Therefore, the action of the motor is smooth and reversal is extremely quick reducing the pressure flow pulse that would normally be present on reversal of a pilot operated motor of this type.

In some instances, however, a measured displacement is desired on the pump end so that the pre-sensing features are eliminated by allowing the piston 24 to strike the sensing valve and bottom out almost simultaneously. For example, with a 3¼ inch bore motor of the type discussed in relation to FIG. 5, a ½-inch stem 118 and 120 provides sufficient override to prevent bottoming out; whereas, a ⅛-inch stem allows simultaneous reversal and bottoming out and also provides a measured stroke.

What is claimed is:

1. An improved reciprocating fluid driven motor comprising in combination:

a drive cylinder with a cylinder chamber,

a drive piston positioned to reciprocate in said chamber

a cylinder head at each end of said cylinder,

a first straight-line passage from said cylinder chamber through one of said heads to the atmosphere and a second straight-line passage from said cylinder chamber through said other head, including a single bend and terminating as a straight conduit through said one head to the atmosphere substantially parallel to and adjacent said first straight-line passage.

a fluid inlet control valve mounted on said one head, said fluid inlet control valve including a member which alternately connects a fluid inlet with only one of said passages, the other of said passages remaining open as a

straight-line passage to the atmosphere, one of each of said passages thereby alternately providing fluid for driving said drive piston in said cylinder chamber while the other of said passages exhausts fluid from said cylinder chamber through a straight-line passage having at the most one single bend in said passage, and

means for driving said fluid inlet control valve to alternately connect said fluid inlet to one or the other of said passages.

2. The improved motor of claim 1 wherein said member of said control valve comprises an insert with a fluid channel adapted to interconnect said inlet with only one of said passages and also includes a cover over said insert, said including an opening from said channel to said cover such that fluid pressure biases said cover away from said insert thereby biasing said insert into substantially

fluid tight communication with said passages and said inlet.

References Cited

UNITED STATES PATENTS

Re. 7,420	12/1876	Cameron	91—306
601,227	3/1898	Appleton	91—306
833,809	10/1906	Turner	91—306
1,066,483	7/1913	Fourma	91—306
1,089,718	3/1914	Metzelaar	91—306

PAUL E. MASLOUSKY, Primary Examiner

U.S. Cl. X.R.

91—313