June 2, 1970 C. E. GUTSHALL 3,515,948

LIGHTNING ARRESTOR ASSEMBLY

Filed June 20, 1968

Fig. 1

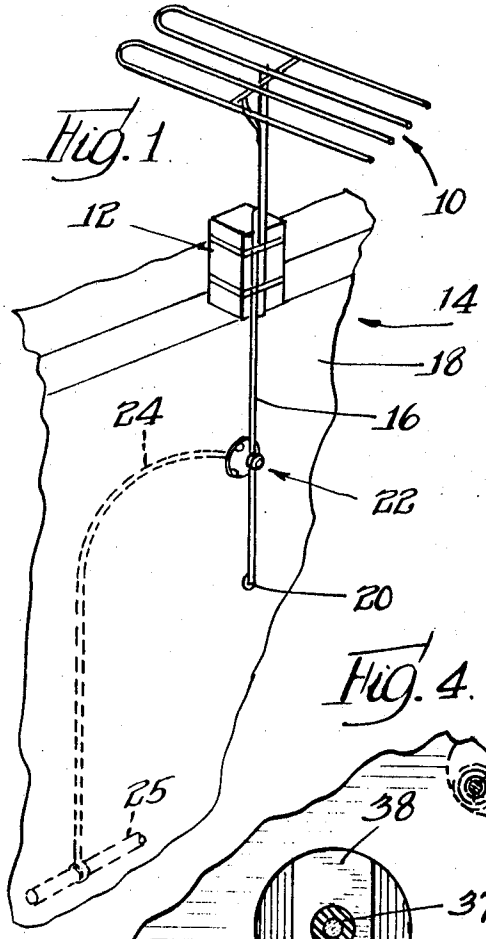

Fig. 2

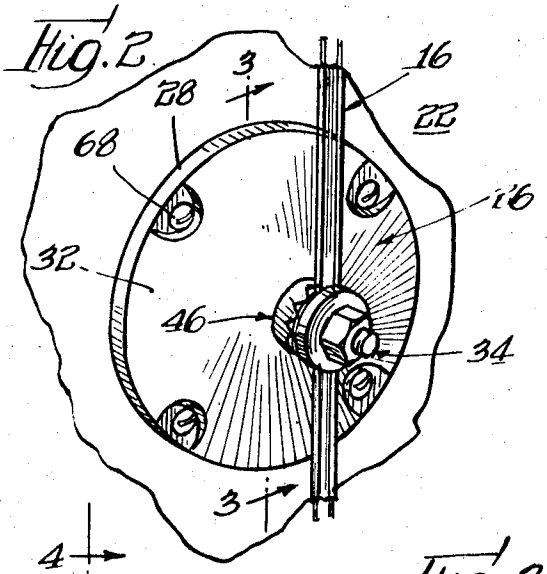

Fig. 3

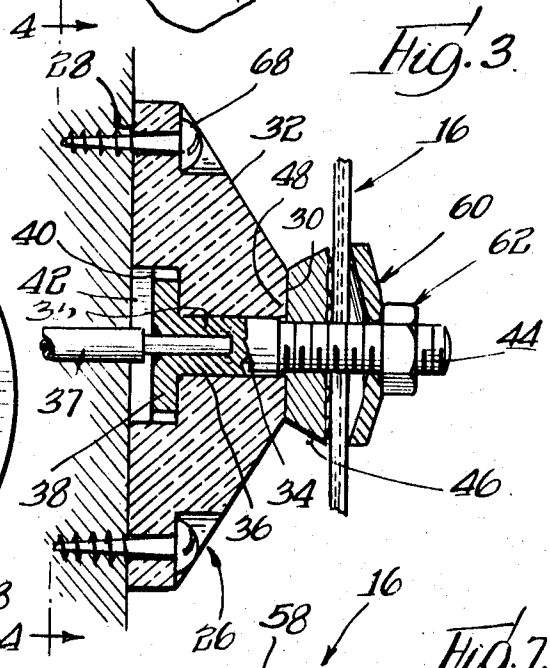

Fig. 4

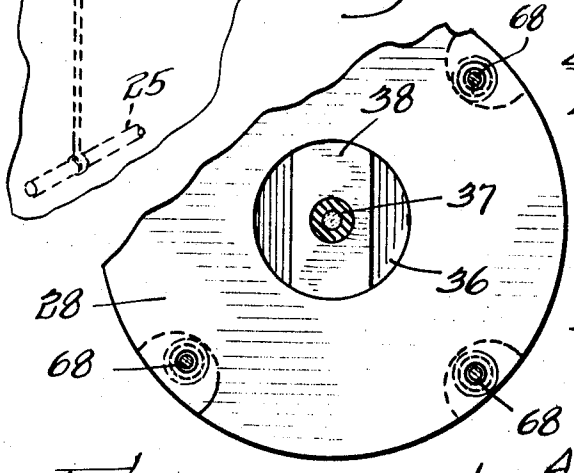

Fig. 5

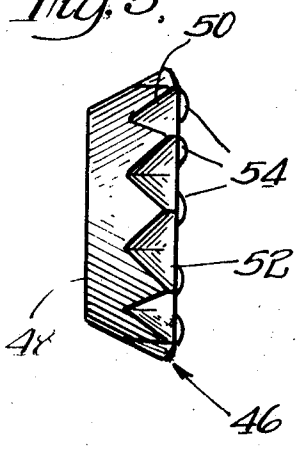

Fig. 6

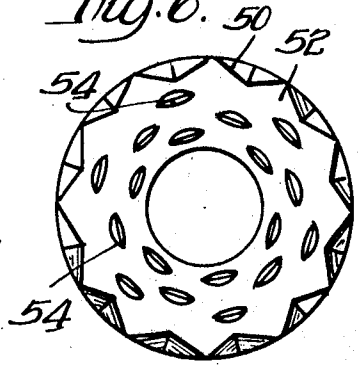

Fig. 7

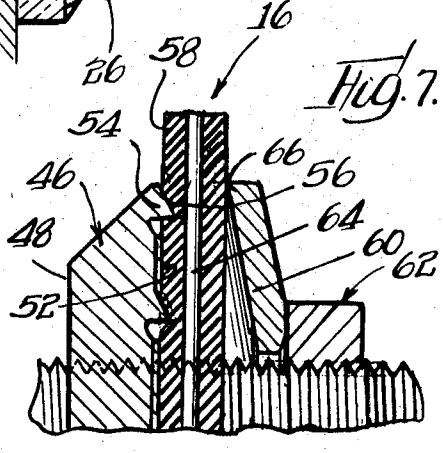

Inventor:
Charles E. Gutshall
By: Olson, Trexler, Wolters & Bushnell Attys.

United States Patent Office 3,515,948 Patented June 2, 1970

3,515,948

LIGHTNING ARRESTOR ASSEMBLY

Charles Edward Gutshall, Roselle, Ill., assignor to Illinois Tool Works Inc., Chicago, Ill., a corporation of Delaware

Filed June 20, 1968, Ser. No. 738,673
Int. Cl. H02h 1/04, 3/22
U.S. Cl. 317—61 11 Claims

ABSTRACT OF THE DISCLOSURE

A lightning arrestor assembly comprising a base of insulating material, a grounded, threaded terminal stud mounted in the base, a first terminal nut member of electrically conductive material mounted on the terminal, the terminal nut including a plurality of nibs extending from one surface thereof and a retaining nut also mounted on the terminal. An antenna lead-in wire is sandwiched between the nuts with the nibs penetrating the insulation of the wire without making contact with the conductors thereof. In the event the antenna is struck by lightning. the weakened insulation burns through, grounding the antenna.

This invention relates generally to lightning arrestor apparatus and more particularly to a lightning arrestor assembly for use with a television or the like antenna.

Radio and television antennas which extend upwardly from the roofs of buildings, or the like, are, during storms, often struck by lightning. A high voltage surge resulting from the lightning bolt may cause damage to a television or radio set connected to the antenna if the latter is not grounded.

While conventional lightning arrestors used to prevent the above are, for the most part, satisfactory in operation, they are usually complex in construction. The arrestors generally include an element which is caused to break down when the antenna is subjected to a lightning surge. Once used however, many of the arrestors of this type may not be reused, or in the event they are reusable, the element must be replaced therein.

Accordingly, it is a primary object of this invention to provide a new and improved lightning arrestor assembly which is simple in construction and use, and relatively inexpensive to produce.

It is still another object of the present invention to provide a lightning arrestor assembly of the last mentioned type which may be reused without replacing component parts thereof.

It is a further object of the present invention to provide a lightning arrestor assembly for connection to an antenna lead-in wire which utilizes the break down of the partially penetrated insulation of the wire to ground the antenna in the event of lightning striking the latter.

It is yet another object of this invention to provide a novel terminal nut member for use in a lightning arrestor assembly of the abovementioned type, having a plurality of nibs on one face thereof of a predetermined height for partially piercing the insulation of an antenna lead-in wire.

A better understanding of the present invention and its organization and construction may be had by referring to the description below in conjunction with the accompanying drawings, wherein:

FIG. 1 is a perspective view of an antenna mounted on a building and coupled to a lightning arrestor assembly according to the invention;

FIG. 2 is an enlarged perspective view of the lightning arrestor assembly of FIG. 1;

FIG. 3 is a side sectional view of the lightning arrestor

assembly of FIG. 2 taken along the line 3—3 thereof;

FIG. 4 is a bottom plan view of the lightning arrestor assembly of FIG. 3;

FIG. 5 is an enalarged side view of the terminal nut used in the lightning arrestor assembly of FIG 3;

FIG. 6 is a top plan view of the terminal nut of FIG. 5; and

FIG. 7 is an enlarged, side fragmentary sectional view of the terminal nut and top retaining nut and clamp washer arrangement mounted on the terminal of a lightning arrestor assembly according to the invention, illustrating the manner in which the aforementioned are employed to secure an antenna lead wire therebetween.

Referring now to the drawings in greater detail, FIG. 1 thereof shows a television antenna **10** mounted on a chimney **12** of a building **14**. The television lead-in wire **16**, which is of the conventional flat or elliptical cross-sectional shaped twin lead, or other suitable type extends from the antenna along wall **18** of the building and through an aperture **20** provided in the wall to a television set (not shown) within the building.

A lightning arrestor assembly **22** is mounted on the wall **18** of the building and is coupled to the antenna lead-in wire. The assembly **22** is connected to a grounded water pipe **25** or the like, within the building by an insulated conductor wire **24**.

The lightning arrestor assembly **22** according to the invention (FIGS. 2–4) comprises a base **26** of Bakelite or other suitable insulating material. The base is cup-shaped with a circular, flat bottom surface **28**, a smaller, flat top surface **30** and an inclined sidewall **32** which interconnects the bottom and top surfaces.

A terminal stud or bolt **34** of an electrically conductive material such as, for example, steel, is mounted in a central aperture **36** provided through base **26** and extending from the bottom to the top surfaces thereof. The terminal includes a specially shaped base portion **38** which is fitted into a complementarily shaped pocket **40** formed in the base **26** within a concentrically shaped cavity **42** which extends into the bottom surface **28** of the base **26**. The terminal stud **34** is prevented from rotation by the insertion of base portion **38** thereof into pocket **40** and includes an opening **36** extending thereinto through base portion **38** for receiving a plug **37** connected by means of wire **24** to ground. The stud terminal **34** is of a length sufficient to extend through base **26** so that the opposite threaded end **44** thereof extends outwardly therefrom.

An electrically conductive steel terminal nut **46** (FIGS. **5** and **6**) including a first relatively flat face **48** is screwed onto the threaded end **44** of stud **34** (FIG. 3) and is tightened so that face **48** thereof is seated on the top surface **30** of the base **26**. The tightening of the nut fastens stud **34** securely to base **26**. The nut **46** has a twelve sided outer edge **50** so that 12-point drive equipment is required to remove the nut from the threaded stud. This prevents tampering therewith in most cases.

The opposite, outwardly extending face **52** of the terminal nut includes, formed thereon, a plurality of nibs, each designated by the numeral **54**. The nibs extend outwardly from face **52** of the nut a predetermined distance, approximately one-quarter of an inch when used with conventional antenna wire and have a cutting edge **56** (FIG. 7) for piercing or penetrating the insulation **58** of the wire.

An internally toothed clamp washer **60** and a retaining hex nut **62**, both of a well-known type, are mounted on the threaded end **44** of stud terminal **34** in opposing relation to face **52** of nut **46**. Nut **62** is tightened downwardly on the threaded end **44** of the stud **34** forcing the clamp washer into engagement with the lead-in wire

16 thereby to sandwich the wire between the nibbed face 52 of the terminal nut 46 and the clamping washer 60. This causes nibs 54 to pierce the insulation 58 of wire 16 as shown in FIG. 7. It should be noted that the nibs do not extend through the insulation to make contact with the conductors 64 therein. While a clamp washer and retaining nut have been shown in the drawings, it is to be understood that other suitable retaining members or arrangements may be employed, if desired.

For purposes of affording a more complete understanding of the invention, it is advantageous now to provide a functional description of the mode in which the component parts thus far described cooperate.

To assemble the lightning arrestor assembly according to the invention, threaded end 44 of terminal 34 is inserted into aperture 36 through cavity 42 in the bottom surface of base 26. The specially shaped base portion 38 of the terminal is received in pocket 40 therein to prevent turning of the terminal in the aperture 36. Next, the steel terminal nut 46 is tightened onto threaded end 44 of terminal 34 until the flat surface 48 of the nut abuts surface 30 of base 26. This serves to hold the terminal 34 on base 26 and to make an electrically conductive connection therebetween.

At this time, the base 26 may be mounted by means of screws, such as 68, on a building wall 18, the bottom surface 28 of the base abutting the wall. The base should be mounted closely adjacent the television or the like lead-in wire 16, as shown in FIG. 1. A ground lead 24 is then connected to the base portion 40 of stud terminal 34, either in the manner illustrated (i.e. with a plug 37 being inserted into an aperture 35 in the terminal 34) or by some suitable alternate means.

After the aforementioned has been completed, the lead-in wire 16 to the antenna 10 (FIG. 1) is placed in contact with surface 52 of terminal nut 46 so as to rest on nibs 54. If the wire 16 is of the flat twin lead type as shown in FIG. 2, it is placed with one of the flat surfaces thereof resting against the nibbed surface 52 of terminal nut 46. If, however, the lead-in wire is elliptical in cross-section, it may be wrapped partially about terminal 34 instead. A clamp washer 60 is placed on the threaded end 44 of stud 34 and a retaining nut 62 is mounted on the terminal end and tightened downwardly therealong. As the nut 62 is tightened, lead-in wire 16 is squeezed between clamp washer 60 and nibs 54, the wire being retained in position thereby. The nibs 54 are caused to pierce the insulation of wire 16 (FIG. 7) until they move closely to conductors 64 therein, but without making mechanical or electrical contact therewith. This prevents the grounding of the lead-in wire under normal conditions but weakens the insulation at the points of penetration. The nibs also provide strain relief to the wire and serve as means for preventing radial movement of the wire during tightening (i.e. the wire is prevented from spreading laterally when compressed under the nut or clamp).

If after the aforementioned mounting procedure is completed the antenna should be struck by lightning, the current produced by the lightning surge will travel along conductors 64 of wire 16 reaching the points of penetration by nibs 54. Because of the piercing relation of nibs 54 and the insulation of wire 16 nearly to conductors 64 thereof, there is, as mentioned heretofore, a weakening at those points along the wire. The current produced by the lightning causes a burning of the weakened insulation to complete a path between the conductors 64 of the wire and terminal nut 46. This in turn channels the lightning surge to ground through the terminal 34 and ground lead 24 connected thereto, preventing damage from the lightning to a television or the like set connected at the end of lead wire 16. Little, if any, damage to the lightning arrestor assembly will occur. Consequently, no replacement of components is necessary for reuse of the arrestor assembly.

Thus, the assembly provides a simple, effective and easy to use lightning arrestor which provides ample protection from lightning and which is reuseable without requiring a substitution or addition of components.

While a particular embodiment of the invention has been shown and described, it should be understood that the invention is not limited thereto since many modifications may be made. It is therefore contemplated to cover by the present application any and all such modifications as fall within the true spirit and scope of the appended claims.

What is claimed is:

1. A lightning arrestor assembly for use with a wired antenna or the like, comprising: a base member of insulating material, a terminal mounted on said base member, at least one end of said terminal extending outwardly from said base member, said terminal being connected to ground, a member of electrically conductive material mounted on said one terminal end, a first surface of said member including a plurality of protrusions extending outwardly therefrom a predetermined distance, and clamping means mounted on said one terminal end, said clamping means being movable along said terminal end to a position adjacent the protrusions of said member for securing therebetween the wire of said antenna, whereby said protrusions are penetratable partially into the insulation of said wire without making contact with the conductors thereof.

2. A lightning arrestor assembly as claimed in claim 1 wherein said one end of said terminal is threaded, wherein said clamping means includes a nut having complementary threads, thereby to be movable along said terminal end toward and away from said member, and wherein said protrusions comprise nibs of a predetermined size formed on said first surface of said member.

3. A lightning arrestor assembly as claimed in claim 2 wherein said terminal comprises a threaded bolt, wherein said base includes an aperture extending therethrough, wherein said bolt extends through said aperture in said base with the threaded end of said bolt extending outwardly from one end thereof and wherein said member includes a complementarily threaded nut having on one surface thereof esaid plurality of nibs, said nut being tightened onto said threaded bolt with said nibbed surface extending outwardly from said base, said nut holding said terminal bolt onto said base.

4. A lightning arrestor assembly as claimed in claim 2 wherein said clamping means further includes a clamp washer, which upon tightening the nut of said clamping means onto said threaded terminal end engages said antenna wire.

5. A lightning arrestor assembly as claimed in claim 3 wherein said antenna wire is relatively flat and includes a pair of spaced apart insulated conductors, the insulation about said conductors being slightly greater in depth than the outwardly extending predetermined distance of said nibs from the first surface of said nut.

6. A lightning arrestor assembly as claimed in claim 3 wherein said antenna wire is elliptical in cross section and includes a pair of conductors mounted in a predetermined thickness of insulation, and wherein the distance the nibs extend from the first surface of said nut is slightly less than the thickness of said insulation, thereby to cause said nibs to penetrate the latter without making contact with said conductors.

7. A lightning arrestor assembly for connection to the insulated lead-in wire of an antenna or the like, comprising: a base of insulating material for mounting on a support surface, an electrically conductive terminal mounted on said base and having a threaded end thereof extending outwardly therefrom, said terminal being grounded, a first complementarily threaded terminal nut member being mounted on said threaded end of said terminal, a first one of the surfaces of said first nut member including a plurality of nibs extending outwardly a

predetermined distance therefrom, and a second complementarily threaded terminal nut member mounted on the threaded end of said terminal with a surface thereof facing toward the outwardly extending nibs of said first nut member, said nut members, upon tightening either or both thereof, being movable toward each other for securing therebetween the lead-in wire of said antenna, thereby to cause said nibs to penetrate the insulation of said wire while not making contact with said conductor portion thereof.

8. A lightning arrestor assembly as claimed in claim 7 wherein said base includes an aperture extending therethrough with a predeterminedly shaped cavity in one surface thereof communicating with said aperture, wherein said terminal includes a threaded bolt member having on one end thereof a head having a shape complementary to that of said cavity for receipt therein, said bolt member extending through said base on said aperture, the opposite, threaded end of said bolt member extending outwardly from the opposite surface of said base, and wherein one of said nut members is tightened onto said threaded end to secure said terminal bolt member on said base.

9. A lightning arrestor assembly as claimed in claim 8 wherein said one nut member securing said bolt member to said base is said first nut member, the nibs thereof extending outwardly therefrom away from said base.

10. A terminal nut member for use in a lightning arrestor arrangement including an insulated lead-in wire having a predetermined number of conductors with a predetermined thickness of insulation thereabout, a base of insulating material, a grounded, threaded terminal extending outwardly from said base and a retaining nut mounted on said terminal; said terminal nut member including on a first surface thereof a plurality of nibs, said nibs extending outwardly from said first surface a distance slightly less than the thickness of said insulation about said conductors, said terminal nut member for mounting on said terminal with said nibbed surface facing one of the surfaces of said retaining nut so that upon the tightening of either or both of said nuts for movement along said threaded terminal said lead-in wire may be secured therebetween, thereby to cause said nibs to pierce said insulation to weaken the latter without contacting said conductors.

11. A terminal nut member as claimed in claim 10 wherein the edge thereof is twelve sided and wherein the surface thereof opposite said nibbed surface is relatively flat for securing said nut member against said base.

References Cited

UNITED STATES PATENTS

2,654,857	10/1953	Finkel	317—69
2,666,908	1/1954	Klostermann	317—69
3,312,868	4/1967	Vodicka	317—61

J D MILLER, Primary Examiner

H. FENDELMAN, Assistant Examiner

U.S. Cl. X.R.

317—61.5; 174—2