A. HALTMAN.

CHUCK.

APPLICATION FILED SEPT. 13, 1919.

1,321,739.

Patented Nov. 11, 1919.

3 SHEETS—SHEET 1.

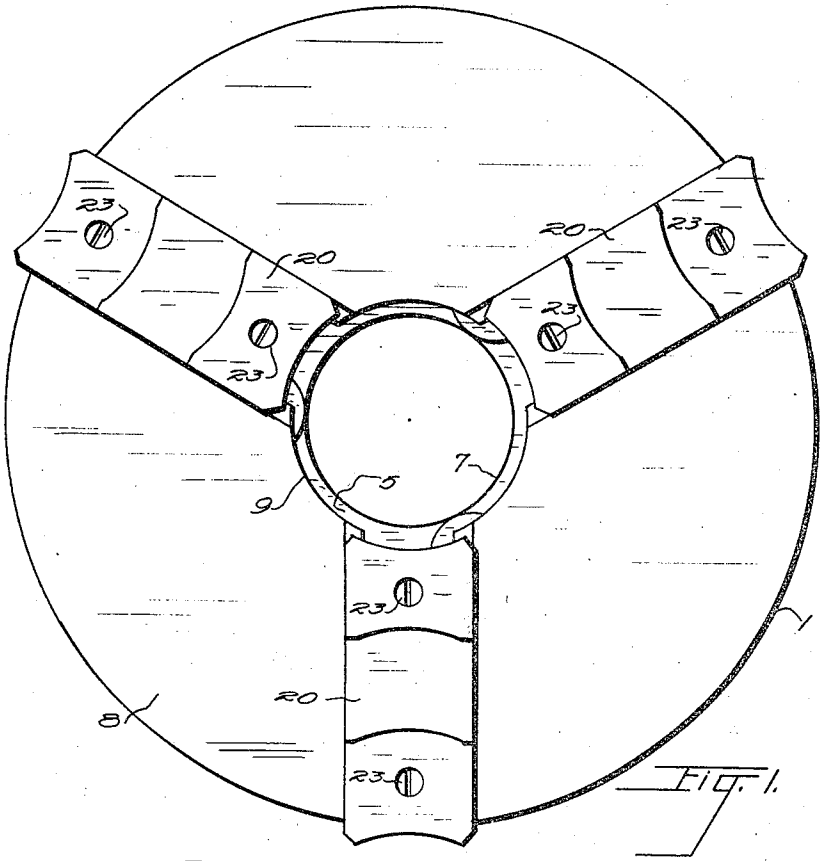

Fig. 1.

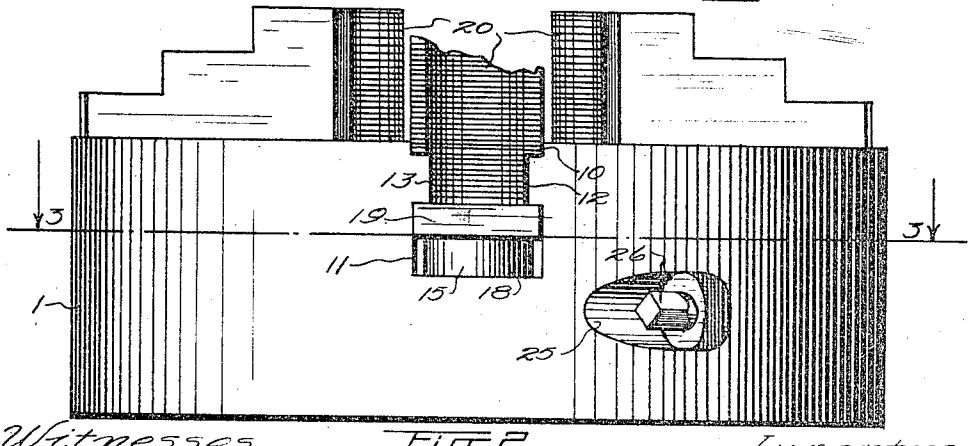

Fig. 2.

Witnesses

William T. Piper

Paul A. Hirsen

Inventor

A. Haltman

By H. J. Sand

Atty

A. HALTMAN.

CHUCK.

APPLICATION FILED SEPT. 13, 1919.

1,321,739. Patented Nov. 11, 1919.

3 SHEETS—SHEET 2.

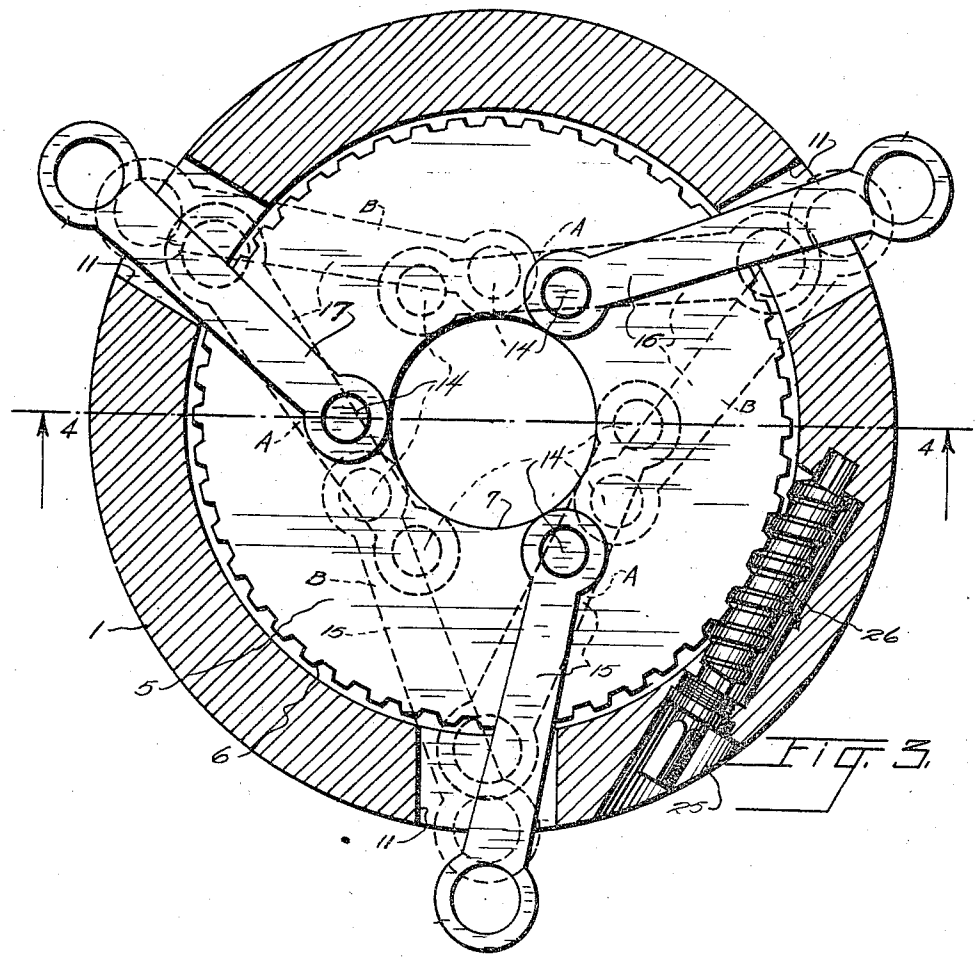

Fig. 3.

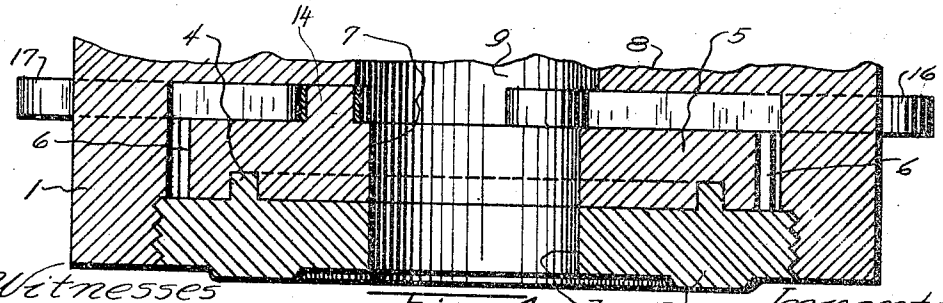

Fig. 4.

Witnesses

William K. Piper

Paul A. Viersen

Inventor

A. Haltman

H. J. Sanders

By Atty.

A. HALTMAN.

CHUCK.

APPLICATION FILED SEPT. 13, 1919.

1,321,739.

Patented Nov. 11, 1919.

3 SHEETS—SHEET 3.

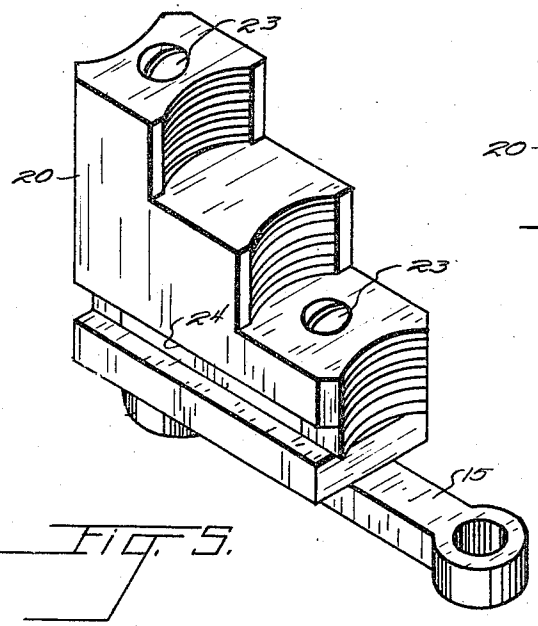

Fig. 5.

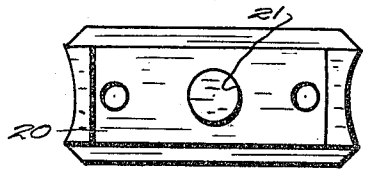

Fig. 6.

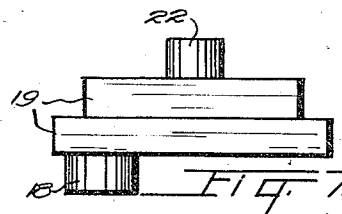

Fig. 7.

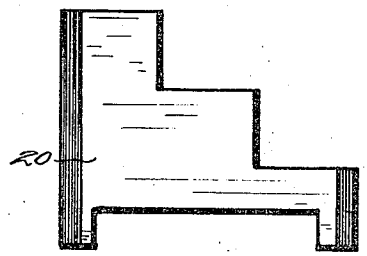

Fig. 8.

Witnesses

William T. Piper

Paul A. Hirsen

Inventor

A. Haltman

By H. J. Sanders

Atty

UNITED STATES PATENT OFFICE.

ADOLF HALTMAN, OF TOPEKA, KANSAS, ASSIGNOR OF ONE-HALF TO ABNER LABOUNTY, OF TOPEKA, KANSAS.

CHUCK.

1,321,739. Specification of Letters Patent. Patented Nov. 11, 1919.

Application filed September 13, 1919. Serial No. 323,602.

To all whom it may concern:

Be it known that I, ADOLF HALTMAN, a citizen of Finland, residing at Topeka, in the county of Shawnee and State of Kansas, have invented certain new and useful Improvements in Chucks, of which the following is a specification.

This invention relates to improvements in chucks and more particularly to self-centering lathe chucks. One object is to provide a chuck of this type that is simple in construction and operation and efficient in use. The chuck is of few parts, strongly made and not easily put out of order. A further object is to provide a chuck in which the jaws are moved from closed position to maximum open position and back again into closed position by a continuous operation of an actuating element which element is moving in one direction. The closing movement of the jaws upon the work centers the same automatically.

With the foregoing and other objects in view the invention consists in the combination and arrangement of parts to be hereinafter fully described, pointed out in the appended claims and illustrated in the accompanying drawings which form a part of this specification and in which—

Figure 1 is a plan view of my improved chuck.

Fig. 2 is a view of the same in elevation, part of one jaw being broken away.

Fig. 3 is a cross section taken on line 3—3 of Fig. 2.

Fig. 4 is a sectional view on line 4—4 of Fig. 3.

Fig. 5 is a perspective view of one jaw and actuating link.

Fig. 6 is an inverted fragmentary view of Fig. 5.

Fig. 7 is a side view of a jaw base.

Fig. 8 is a side view of the body portion of one jaw.

Like reference characters denote corresponding parts throughout the several views.

My chuck comprises the cylindrical shell 1 which is threaded interiorly to receive the retaining or closing and mounting disk 2 which disk is formed with the central perforation 3 and with the annular rib 4 which rib fits snugly in an annular groove formed in the large gear 5 that rotates directly upon the disk 2, said gear being formed with the teeth 6 and with a central perforation 7 of the same size as, and in alinement with, the perforation 3 in the disk 2. The gear 5 is confined and revolves wholly within the shell 1. The shell 1 is formed with the face plate 8 having formed therein the central perforation 9 somewhat larger than but concentric with the perforation 7 in the gear, the face of said plate 8 being spaced away from the gear 5 and formed with the radial slots 10, one hundred and twenty degrees apart, which register with the perforations 11 in the shell. The face plate 8 is of sufficient thickness to have the oppositely disposed ribs 12, 13 projecting from the walls of the slots.

The gear 5 is formed with a plurality, in this instance three, of face studs 14 to which the links 15, 16, 17 are secured pivotally, each one of said links being movable over the face of the gear 5 and extending through the perforations 11 of the shell and each of said links being engaged by one of the studs 18 that project from each of the stepped base blocks 19 that carry the jaws 20 which are formed with the sockets 21 adapted, when said jaws rest upon the base blocks 19 to receive the studs 22 carried by said blocks. Bolts 23 serve to further secure the jaws to their blocks 19. The jaws 20 are movably disposed in the slots 10 of the face 8 and, when in position upon the base blocks, form laterally grooved portions 24 which receive the aforesaid shoulders 12, 13 which serve to guide the jaws in their movements.

The said shell is formed with a socket 25 in which the screw shaft 26 is journaled which shaft is in mesh with and drives the gear 5, the exterior end of said shaft being square in cross section to receive the end of a bit to effect the desired rotation. Rotation of the screw shaft will rotate the gear 5 and so cause movement of the links 15, 16, 17 simultaneously thus causing similar movement of the jaws. In the position of the links shown dotted at A, Fig. 3, the jaws 20 are closed; in the intermediate position of the links shown in full lines the jaws are opened to approximately the maximum degree and at the position of the links shown dotted at B the jaws are closed again. The

movement of the jaws from closed to extreme open and to closed position again is effected by rotation of the screw shaft 26 in one direction.

What is claimed is:—

1. In a chuck, a shell closed at the front to form a face plate and open at the rear, a mounting member closing the rear of the shell, a gear arranged within the shell, jaws slidably mounted for radial movement on the face plate, link connections between the jaws and the gear whereby the movement of the latter is transmitted to said jaws, and a screw shaft to rotate the latter, the radial play of the jaws, the length of the links, and the range of rotation of the gear being such that the jaws may be thrown in both directions by rotation of the gear in one direction.

2. In a chuck, a shell closed at the front to form a face plate and open at the rear, a mounting member fitted within and closing the rear of the shell and provided upon its inner face with an annular rib, a gear arranged within the shell and provided on one face with an annular groove to receive the said annular rib of the mounting member to guide and center said gear in the shell, jaws slidably mounted on the face plate, links playing through the shell and pivoted to the jaws and to the other face of the gear, whereby movement of the latter is transmitted to the jaws, and a screw shaft to rotate the gear.

In testimony that I claim the foregoing as my own I have hereto affixed my signature.

ADOLF HALTMAN.