Applicant's name: Total no of sheets: 2

ELECTROMOVE TECHNOLOGIES PRIVATE LIMITED

Application no: 202241064551 Sheet no: 1

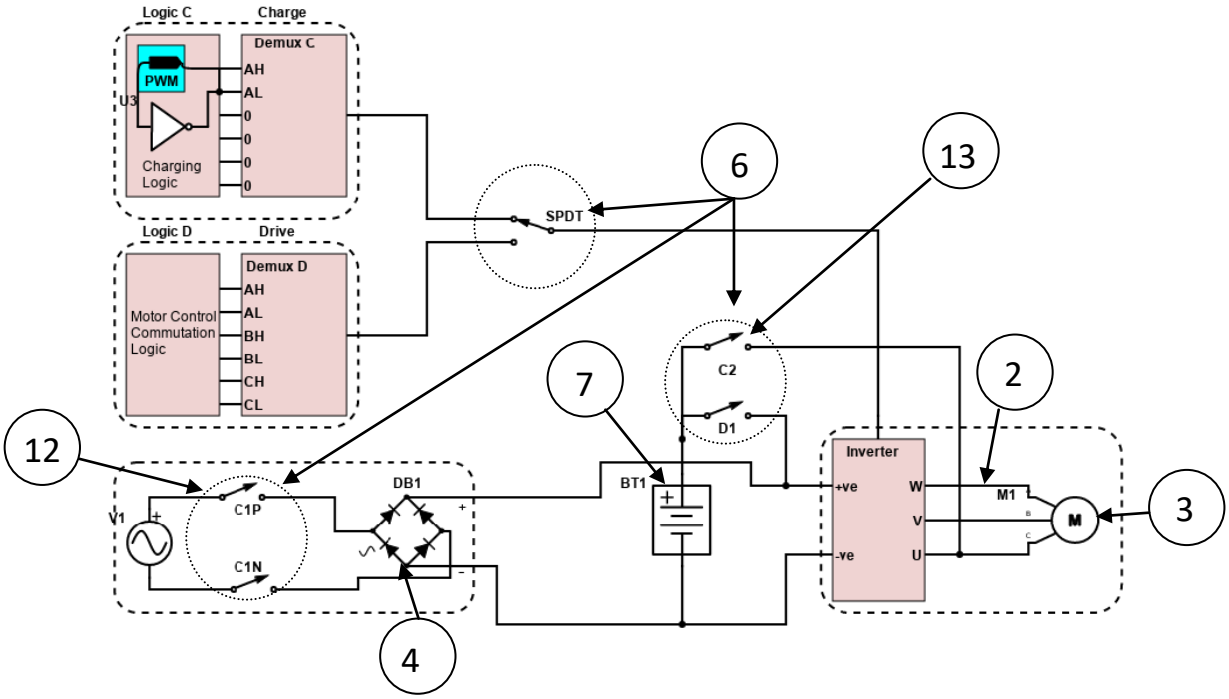

Figure 1

For **ELECTROMOVE TECHNOLOGIES PRIVATE LIMITED,**
By its agent

V SARAVANARAJA
[IN/PA-3276]

Applicant's name: Total no of sheets: 2

ELECTROMOVE TECHNOLOGIES PRIVATE LIMITED

Application no: 202241064551 Sheet no: 2

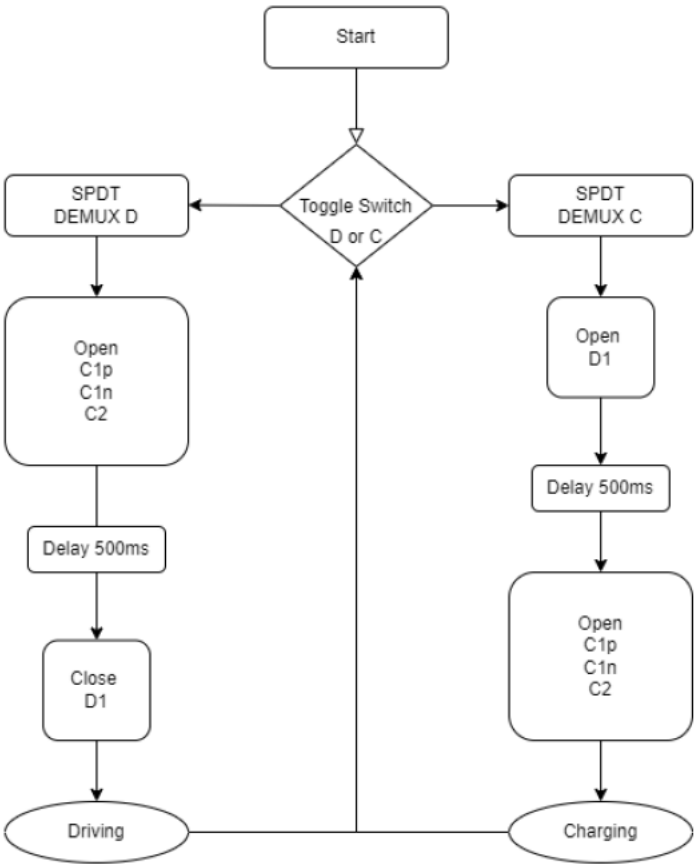

SPDT (Contactor or SSR) simply a switch

Demux (Demultiplexer)

C1p,c1n,c2,d2 are switches

Toggle switch D (Drive) and C (Charging)

For **ELECTROMOVE TECHNOLOGIES PRIVATE LIMITED,**
By its agent

V SARAVANARAJA
[IN/PA-3276]

Applicant's name: Total no of sheets: 2

ELECTROMOVE TECHNOLOGIES PRIVATE LIMITED

Application no: Sheet no: 1

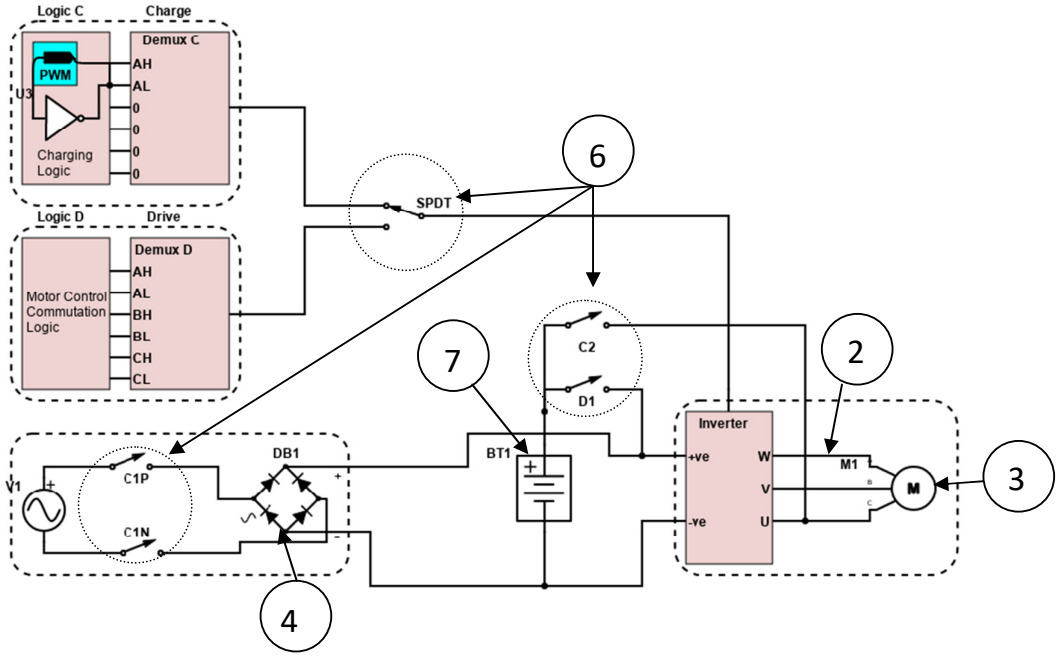

Figure 1

For **ELECTROMOVE TECHNOLOGIES PRIVATE LIMITED,**
By its agent

V SARAVANARAJA
[IN/PA-3276]

Applicant's name: Total no of sheets: 2

ELECTROMOVE TECHNOLOGIES PRIVATE LIMITED

Application no: Sheet no: 2

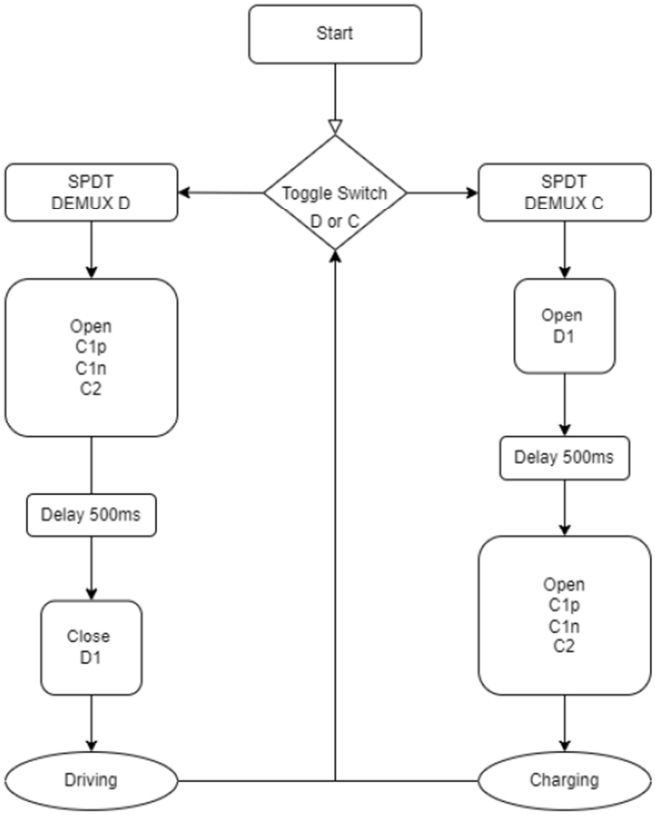

SPDT (Contactor or SSR) simply a switch

Demux (Demultiplexer)

C1p,c1n,c2,d2 are switches

Toggle switch D (Drive) and C (Charging)

For **ELECTROMOVE TECHNOLOGIES PRIVATE LIMITED,**
By its agent

V SARAVANARAJA
[IN/PA-3276]

FORM – 2

THE PATENTS ACT, 1970

(39 of 1970)

&

The Patents Rules, 2003

COMPLETE SPECIFICATION

(SECTION 10)

TITLE

"SYSTEM FOR CONTROLLING ELECTRIC VEHICLE BATTERY CHARGER AND PROPULSION OF VEHICLE USING A SINGLE UNITARY CONTROL UNIT AND MOTOR WINDING"

A P P L I C A N T

We are **ELECTROMOVE TECHNOLOGIES PRIVATE LIMITED** an Indian company, having my address at, Door no.16, P&T Colony, B Extension, G Block, Sundakkamuthur, Peru Coimbatore – 641010, State of Tamil Nadu, India

The following specification particularly describes and ascertains the nature of this invention and the manner in which it is to be performed:-

FIELD OF THE INVENTION

The present invention relates to a system for controlling electric vehicle battery charger and propulsion of vehicle, and more particularly the system contains a single unitary motor winding and controller that utilizes the motor for driving the e-vehicle during the running state as well as utilizes the motor's windings for effortlessly charging the e-vehicle via standard household wall socket during the parking state.

BACKGROUND OF THE INVENTION

There is a prevailing Chicken-egg problem in the EV industry which is whether the charging infrastructure is to be established first or the EV production has to be boosted for faster EV adoption? Unfortunately, neither of those is happening because both sides are still debating which needs to be done first.

Existing Solutions:

For faster adoption of EVs, there are proven methods such as battery swapping, onboard chargers and building charging stations. But implementing both of them requires huge investments and takes a long time.

On board chargers- On board chargers are generally slow and pretty much non-existent in two wheelers, and cost more and use extra space and weigh more.

Battery Swapping solutions - Battery swapping is one another potential solution to range anxiety, reduced vehicle cost and efficient charging arrangement.

The prior art EP3725606A1 discloses about Battery charging and swapping station. comprising a battery charging and storage module (1) and a battery swap platform module (2), wherein the battery charging and storage module (1) is configured to

dock with the battery swap platform module (2) with respect to a battery (3), and the battery swap platform module (2) is configured to exchange the battery (3) with the battery charging and storage module (1), and to swap a battery (3) of the vehicle (4).

But above said battery swapping method have some drawbacks such as Lack of standards for battery swapping, lack of openness and divergent technical and economic interests are the key challenges. Also safety is a key concern that needs to be addressed in the battery swapping stations. A common swapping policy for promoting battery swapping technology is key. Other impediments are the large investment requirement for battery-swapping stations, operation and maintenance of the swapping stations and difficulty in achieving unified standards.

Removable Batteries : Though most of the customers who own an EV prefers to charge their vehicle directly through either 3 Pin AC chargers or Type II chargers with the battery undetached inside the vehicle itself, some of the manufacturers have their battery packs removable for the Battery swapping anticipation and lack of infrastructure in their condos and apartments which started to grow now But removable batteries are very heavy for a person to carry and one will be frustrated if he/ She carries the packs daily. Also one has to disconnect the Battery and the MCB ensuring safe electrical practices which is not recommendable for any consumer.

External chargers: External chargers are a very fast option for faster EV adoption and involve a high upfront cost for establishing without any ROI. For example, A single fast charging unit (5kW) for E-bikes costs about Rs.50,000 to Rs.60,000 investment. To establish a charging station, 5 charging units have to be installed and the cost would be around Rs.3 lakhs per charging station. Superfast DC-DC charging

is the biggest task to implement in India since it requires a lot of infrastructure development and a huge investment. Considering these existing requirements, the proposed invention provides an option to share electrical and electronics components of the EV (inverter and motor) to be used as a charger.

The prior art US5202617A discloses about charging station for electric vehicles. The charging station for electric vehicles which have rechargeable batteries is provided. The charging station comprises a power section controlled by a fast acting power controller, a power connector and associated power cables for connecting to the vehicle, an interface with signal cables to carry status and/or control signals between the vehicle and the power controller, and a lockout which precludes delivery of power to the vehicle except when the power connector is in place. High charging currents are delivered to the battery of the vehicle as a consequence of signals at any instant in time to the power controller, so as to be able to turn delivery of the charging current on and off in less than a few milliseconds. The resistance free voltage of the vehicle battery is measured during intervals when the charging current is off, and the operation of the power controller is a function of the battery resistance free voltage at any instant in time. Operation may be manually controlled, whereby at least maximum voltage and current settings are preset by the operator; or operation may be completely automatic and under the control of a charge controller within the vehicle and associated with the battery. Thus, for each vehicle that is equipped with a charge controller, the operation of the charging station is battery specific, and may be quite different as to conditions of voltage and current being delivered to another electric vehicle which may be subsequently re-charged from the same charging station.

Thus there is felt a need for an effective system and method that not only charges the e-vehicle but also reduces the number of components without affecting the performance of the charger used therein.

OBJECT OF THE INVENTION

An object of the invention is to provide a single unitary controller and motor winding for controlling electric vehicle battery charger and propulsion of e-vehicle.

Another object of the invention is to provide a system that utilizes the motor for driving the e-vehicle as well as utilizes the motor's windings for charging the e-vehicle during the parking state.

Yet another object of the invention is to use the coils of the motor instead of additional inductor coils for bucking and boosting the voltage while charging.

Yet another object of the invention is to eliminate the dedicated charging infrastructure for e-vehicle charging.

Yet another object of the invention is to reduce the cost of the vehicles by reducing requirements of significant number of charging components.

Yet another object of the invention is to eliminate the requirement of carrying the dedicated charger everywhere.

Further object of the invention is to provide a simple charger which will allow the user to charge the vehicle using the usual house hold wall socket.

SUMMARY OF THE INVENTION

The present invention relates to a system for propelling and charging of electric vehicles using windings of the motor and single unitary controller.

An aspect of the system involves a single unitary controller and winding of the available traction motor placed on the vehicle for charging and propelling the e-vehicle. For the changing needs of EVs, bucking and boosting requires a high current inductor, which can conveniently be found inside an induction motor or PM motor. The single unitary controller can use the coils of the motor as an inductor to boost and buck the voltage. The battery can be charged with self-regulated power supplies without adding an additional coil. In this way, the charger is also eliminated from the configuration.

BRIEF DESCRIPTION OF THE DRAWINGS

S.NO	PART NAME	PART NO
1.	Unitary controller/Unitary motor inverter cum battery charge control unit	1
2.	Coils/Winding of traction motor	2
3.	Motor	3
4.	Converter circuit/Rectifier/Diodes/filter unit	4
5.	Inverter circuit/IGBT	5
6.	Switching units/switches/relays	6

7.	Storage battery	7
8.	Electric vehicle	8
9.	Wall socket	9
10.	Filtering unit/capacitor	10
11.	Input relays	11
12.	Primary charging relay	12
13.	Secondary charging relay	13

Figure 1 illustrates the block diagram of proposed invention.

Figure 2 illustrates the flow chart of the proposed invention based on figure 1.

The above drawing illustrates the details has been given and will be provided with respect to certain specific embodiments, it is to be understood that the scope of the disclosure should not be limited to such embodiments but that the same are provided simply for enablement and best mode purposes. The breadth and spirit of the present disclosure is broader than the embodiments specifically disclosed and encompassed within the claims eventually appended hereto.

DETAILED DESCRIPTION OF THE INVNETION

All referenced methods are incorporated herein by reference in their entirety. Furthermore, where a definition or use of a term in a reference, which is incorporated by reference herein, is inconsistent or contrary to the definition of that term provided herein, the definition of that term provided herein applies and the definition of that term in the reference does not apply.

While certain aspects of conventional technologies have been discussed to facilitate disclosure of the invention, Applicants in no way disclaim these technical aspects, and it is contemplated that the claimed invention may encompass one or more of the technical aspects discussed herein.

The present invention may address one or more of the problems and deficiencies of the prior art discussed above. However, it is contemplated that the invention may prove useful in addressing other problems and deficiencies in a number of technical areas. Therefore, the claimed invention should not necessarily be construed as limited to addressing any of the particular problems or deficiencies discussed herein.

In this specification, where a document, act or item of knowledge is referred to or discussed, this reference or discussion is not an admission that the document, act or item of knowledge or any combination thereof was at the priority date, publicly available, known to the public, part of common general knowledge, or otherwise constitutes prior art under the applicable statutory provisions; or is known to be relevant to an attempt to solve any problem with which this specification is concerned.

In the following detailed description of the preferred embodiments, reference is made to the accompanying drawings, which form a part thereof, and within which are shown by way of illustration specific embodiments by which the invention may be practiced. It is to be understood that other embodiments may be utilized, and structural changes may be made without departing from the scope of the invention.

As used in this specification and the appended claims, the singular forms “a,” “an,” and “the” include plural referents unless the content clearly dictates otherwise. As

used in this specification and the appended claims, the term “or” is generally employed in its sense including “and/or” unless the context clearly dictates otherwise.

The present invention is intended to present a solution to charging needs of e-vehicle through the usual power socket as well as needs for having a system contains a conversion circuit that utilizes the motor for driving the e-vehicle during the running state as well as utilizes the motor’s windings for charging the e-vehicle during the static state.

One of the preferred embodiment of the invention discloses about a unitary motor inverter cum battery charge control unit includes a motor winding (2) for charger free charging operation of an electric vehicle (8), the unitary motor inverter cum battery charger (1) consisting of a set of input relays (11) configured to perform a switching operation to supply the AC power to the inverter (5). A motor (3) configured to drive the electric vehicle (8). A primary charging relay (12) is connected between a battery (7) and the inverter (5) and a secondary charging relay (13) is connected between the motor (3) and the battery (7). The inverter (5) configured to drive the motor based on stored DC power. A filter unit (4) configured to reduce the noise from the input power supply. The control unit (1) include power transistors to control power using PWM. The proposed invention mainly characterized to configure motor coil/winding (2) as a high power inductor to perform buck or boost operation during the charging mode. The unitary motor inverter cum battery charge control unit (1) configured to convert and process battery power to propel the motor (3) and serve as charger, when charging it does so by generating appropriate gate pulses to the power-transistors and switching the relays, specifically when the vehicle (8) is charging and plugged into the AC

outlet, the control unit converts it to DC using a simple full bridge rectifier (4), which either boosts or bucks voltage in accordance with the battery specifications by using the motor coil present in the propulsion motor (3), thus achieving charger-less EV charging.

Another embodiment of the invention discloses about the AC outlet voltage, which is 230V. The control unit bucks the voltage when the battery voltage is less than 325vdc, and boosts if it is over 325vdc.

Yet another embodiment of the invention discloses about the power transistors capable of being an IGBT (5).

Yet another embodiment of the invention discloses about the battery (7) supplies DC to Inverter (5) for converting the DC to AC and power the motor (3) according to the user input.

Yet another embodiment of the invention discloses about the control unit converts AC from mains output and converts it to DC, either bucks or boosts the voltage and limits the current.

Yet another preferred embodiments of the invention discloses about a Power Electronic device being developed that can propel an electric vehicle (8) and charge the battery pack (7) when not in use. This is again a motor controller (1) that can act as an inbuilt electric charger. EVs (Motor- Controller-Battery-Charger). Basically a high wattage battery (7) supplies DC to Inverter which will convert the DC to AC and power the motor according to the user input. So it has the ability to limit the

voltage, vary the frequency, read the voltage and current through the system and motor.

About chargers- It converts AC from mains output and converts it to DC, either bucks or boosts the voltage and has the ability to limit the current. Both the inverter (5) and the charger achieves this with similar power electronic components such as MOSFETS, IGBTs., We can repurpose the power electronic component of the inverter to be used as a charging element while it is parked at a convenient location with an AC outlet. Let's imagine the vehicle is parked and is plugged into an AC outlet with 230V. We first convert it to DC with a simple full bridge rectifier and we either buck or boost the voltage according to the battery specification. RMS of 230VAC is roughly 325VDC, so if the nominal battery voltage is less than 325vdc we buck the voltage and if it’s over 325vdc we boost the voltage. Bucking and boosting for charging needs of EVs requires a high current inductor which is conveniently present as an induction motor or PM motor. The coils (2) of the motor (3) can be used as an inductor for bucking and boosting the voltage. Now the rectified voltage can be fed to the inverter (5) that uses a split link topology which can conveniently switch power transistors to buck or boost the voltage and control the current using PWM from the same microcontroller as the motor driver. Charging can be achieved by simply rerouting the power through the inverter using few contactors or Solid state relays.

Yet another embodiment of the invention discloses about the Inverter circuit has IGBTs (5), which is switched with PWM inputs.

Yet another embodiment of the invention the stated configuration in figure 1 can be incorporated in the traction motor (3) as an in-built charge controller to form a propulsion motor as an electric vehicle battery charger.

Further embodiment of the invention discloses about the charging infrastructure even before they start manufacturing which could save billions for manufacturers. Also there will be a drop in cost of vehicles since the entire charging components are eliminated and most of the components are shared between the charger circuit and the controller's. For customers, they need not carry the charger everywhere since the chargers are not still standardized in India. All they need is a power socket. And since all of the components are present inside EV, Power consumption can easily be accounted for incentives and load sharing needs. As the power lines are directly connected to the power inverter, bi-directional flow can be achieved, making grid connected charging systems less complicated and more economical.

ADVANTAGES OF THE INVENTION

1. The system eliminates additional inductor coil for self-regulated power supply.
2. Eliminating the requirement of battery swapping, onboard chargers and building charging stations.
3. Reducing the huge investments in terms of additional batteries and building dedicated charging station.
4. Eliminates the requirement of additional charger,
5. Allow the vehicle to be recharged via a household outlet.

So that the manner in which the features, advantages and objects of the invention, as well as others which will become apparent, may be understood in more detail, more particular description of the invention briefly summarized above may be had by reference to the embodiment thereof which is illustrated in the appended drawings, which form a part of this specification. It is to be noted, however, that the drawings illustrate only a preferred embodiment of the invention and is therefore not to be considered limiting of the invention's scope as it may admit to other equally effective embodiments.

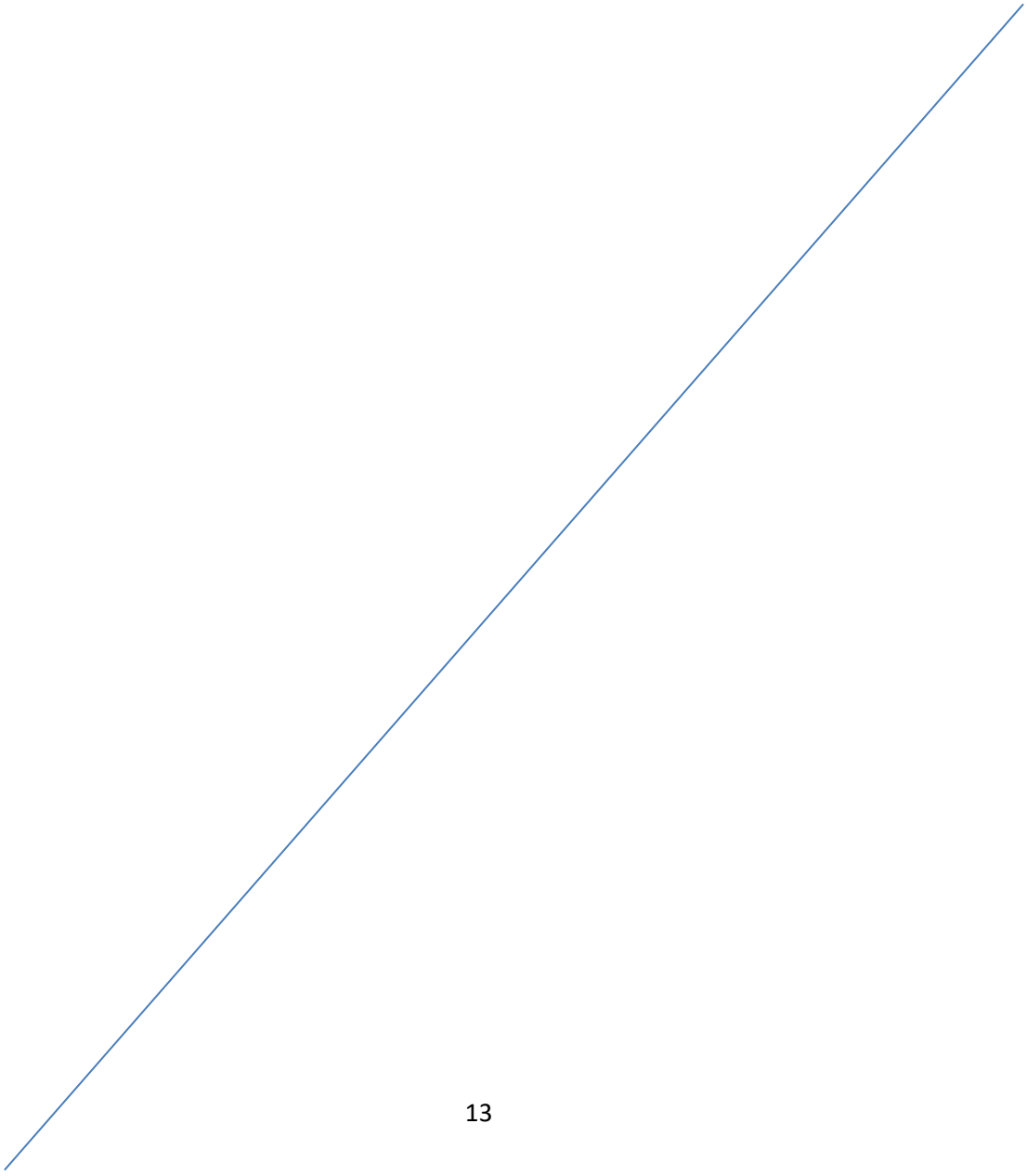

WE CLAIM

1. A unitary motor inverter cum battery charge control unit includes a motor winding (2) for charger free charging operation of an electric vehicle (8), the unitary motor inverter cum battery charger (1) consisting of;
    a. a set of input relays (11) configured to perform a switching operation to supply the AC power to the inverter (5),
    b. a motor (3) configured to drive the electric vehicle (8);
    c. a primary charging relay (12) is connected between a battery (7) and the inverter (5) and a secondary charging relay (13) is connected between the motor (3) and the battery (7),
    d. the inverter (5) configured to drive the motor based on stored DC power;
    e. a filter unit (4) configured to reduce the noise from the input power supply;
    f. the control unit (1) include power transistors to control power using PWM;

    characterized in that

    g. configuring motor coil/winding (2) as a high power inductor to perform buck or boost operation during the charging mode,
    h. the unitary motor inverter cum battery charge control unit (1) configured to convert and process battery power to propel the motor (3) and serve as charger, when charging it does so by generating appropriate gate pulses to the power-transistors and switching the relays, specifically when the vehicle (8) is charging and plugged into the AC outlet, the control unit converts it to DC using a simple full bridge rectifier (4), which either boosts or bucks voltage in accordance with the battery specifications by using the motor coil

present in the propulsion motor (3), thus achieving charger-less EV charging.

2. The control unit as claimed in claim 1, wherein the AC outlet voltage is 230V.

3. The control unit as claimed in claim 1, wherein the control unit bucks the voltage when the battery voltage is less than 325vdc, and boosts if it is over 325vdc.

4. The control unit as claimed in claim 1, wherein in the said power transistors capable of being an IGBT (5).

5. The control unit as claimed in claim 1, wherein the said battery (7) supplies DC to Inverter (5) for converting the DC to AC and power the motor (3) according to the user input.

6. The control unit as claimed in claim 1, wherein the said control unit converts AC from mains output and converts it to DC, either bucks or boosts the voltage and limits the current.

For **ELECTROMOVE TECHNOLOGIES PRIVATE LIMITED,**
By its agent

V SARAVANARAJA
[IN/PA-3276]

TITLE: SYSTEM FOR CONTROLLING ELECTRIC VEHICLE BATTERY CHARGER AND PROPULSION OF VEHICLE USING A SINGLE UNITARY CONTROL UNIT AND MOTOR WINDING

APPLICANT NAME: ELECTROMOVE TECHNOLOGIES PRIVATE LIMITED

APPLICATION NO: 202241064551

ABSTRACT

The present invention relates to a system that propels and charges electric vehicles (8) by using motor windings (2) and a single unitary control unit (1). The system involves a single unitary control unit (1) and the winding of the available traction motor (3) placed on the vehicle (8) for charging and propelling the vehicle (8). For the changing needs of EVs, bucking and boosting requires a high current inductor, which is commonly inside an induction motor or PM motor (3). The single unitary control unit (1) can use the coils (2) of the motor (3) as an inductor to boost and buck the voltage. The battery (7) can be charged with self-regulated power supplies without adding an additional coil. This also eliminates the charger from the configuration (Refer figure 1).

