Office de la Propriété Intellectuelle du Canada
Un organisme d'Industrie Canada

Canadian Intellectual Property Office
An agency of Industry Canada

CA 2562153 A1 2005/10/27

(21) 2 562 153

(12) DEMANDE DE BREVET CANADIEN
CANADIAN PATENT APPLICATION

(13) A1

(86) Date de dépôt PCT/PCT Filing Date: 2005/04/07
(87) Date publication PCT/PCT Publication Date: 2005/10/27
(85) Entrée phase nationale/National Entry: 2006/10/03
(86) N° demande PCT/PCT Application No.: US 2005/011832
(87) N° publication PCT/PCT Publication No.: 2005/099986
(30) Priorité/Priority: 2004/04/08 (US10/822,297)

(51) Cl.Int./Int.Cl. *B29C 31/00* (2006.01), *B29C 31/06* (2006.01), *B29C 43/08* (2006.01), *B29C 43/34* (2006.01)

(71) Demandeur/Applicant:
GRAHAM PACKAGING PET TECHNOLOGIES INC., US

(72) Inventeurs/Inventors:
RITZ, GREGORY A., US;
TRUMAN, THOMAS C., US

(74) Agent: OGILVY RENAULT LLP/S.E.N.C.R.L.,S.R.L.

(54) Titre : DISPOSITIF ET PROCEDE POUR LE TRANSFERT DE BOULETTES
(54) Title: PELLET TRANSFER APPARATUS AND METHOD

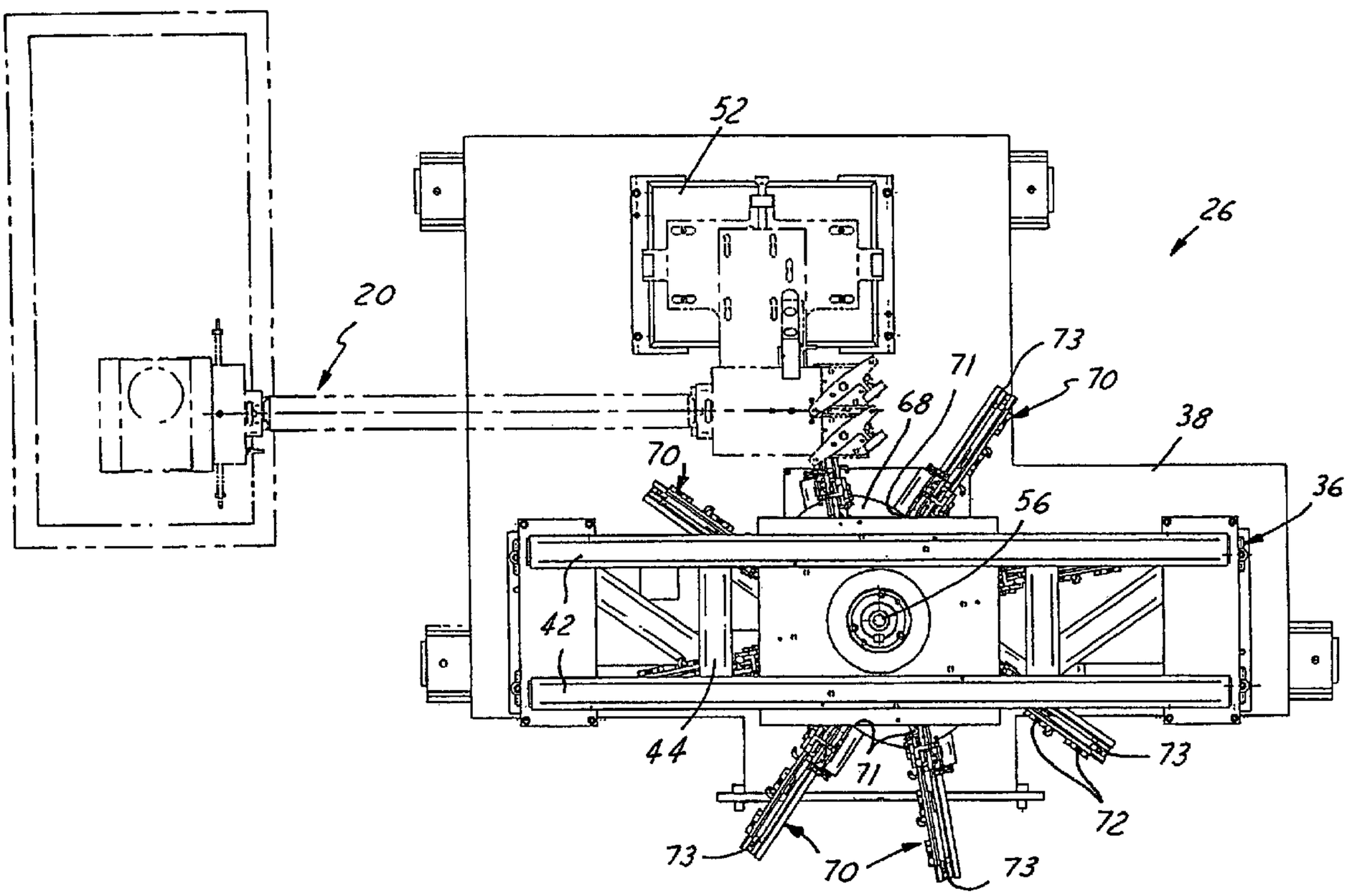

(57) Abrégé/Abstract:
An apparatus for transferring a charge of plastic material to a molding machine having a mold with a mold cavity (24). The transfer apparatus includes a hub (66) rotated about an axis (56), at least one arm (70) extending generally radially from the hub to rotate with the hub around the axis (56), and a cam system (74) operably coupled to the arm (70) for moving the arm along a path with respect to the axis (56) as the hub and the arm rotate around the axis. In one embodiment, at least a portion of the arm travels along a plane that is parallel to the axis during a portion of the path.

(12) INTERNATIONAL APPLICATION PUBLISHED UNDER THE PATENT COOPERATION TREATY (PCT)

(19) World Intellectual Property Organization
International Bureau

(43) International Publication Date
27 October 2005 (27.10.2005)

PCT

(10) International Publication Number
WO 2005/099986 A1

(51) International Patent Classification[7]: B29C 31/00, 43/34, 43/08, 31/06

(21) International Application Number: PCT/US2005/011832

(22) International Filing Date: 7 April 2005 (07.04.2005)

(25) Filing Language: English

(26) Publication Language: English

(30) Priority Data:
10/822,297 8 April 2004 (08.04.2004) US

(71) Applicant *(for all designated States except US)*: **GRAHAM PACKAGING PET TECHNOLOGIES INC.** [US/US]; 2401 Pleasant Valley Road, York, PA 17402 (US).

(72) Inventors; and

(75) Inventors/Applicants *(for US only)*: **RITZ, Gregory, A.** [US/US]; 9805 Wolfinger Road, Berkey, OH 43504 (US). **TRUMAN, Thomas, C.** [US/US]; 3849 Sylvan Wood Dr., Sylvania, OH 43560 (US).

(74) Agent: **HENDRICKS, Therese, A.**; Kudirka & Jobse, LLP One State Street, Suite 800, Boston, MA 02109 (US).

(81) Designated States *(unless otherwise indicated, for every kind of national protection available)*: AE, AG, AL, AM, AT, AU, AZ, BA, BB, BG, BR, BW, BY, BZ, CA, CH, CN, CO, CR, CU, CZ, DE, DK, DM, DZ, EC, EE, EG, ES, FI, GB, GD, GE, GH, GM, HR, HU, ID, IL, IN, IS, JP, KE, KG, KM, KP, KR, KZ, LC, LK, LR, LS, LT, LU, LV, MA, MD, MG, MK, MN, MW, MX, MZ, NA, NI, NO, NZ, OM, PG, PH, PL, PT, RO, RU, SC, SD, SE, SG, SK, SL, SM, SY, TJ, TM, TN, TR, TT, TZ, UA, UG, US, UZ, VC, VN, YU, ZA, ZM, ZW.

(84) Designated States *(unless otherwise indicated, for every kind of regional protection available)*: ARIPO (BW, GH, GM, KE, LS, MW, MZ, NA, SD, SL, SZ, TZ, UG, ZM, ZW), Eurasian (AM, AZ, BY, KG, KZ, MD, RU, TJ, TM), European (AT, BE, BG, CH, CY, CZ, DE, DK, EE, ES, FI, FR, GB, GR, HU, IE, IS, IT, LT, LU, MC, NL, PL, PT, RO,

[Continued on next page]

(54) Title: PELLET TRANSFER APPARATUS AND METHOD

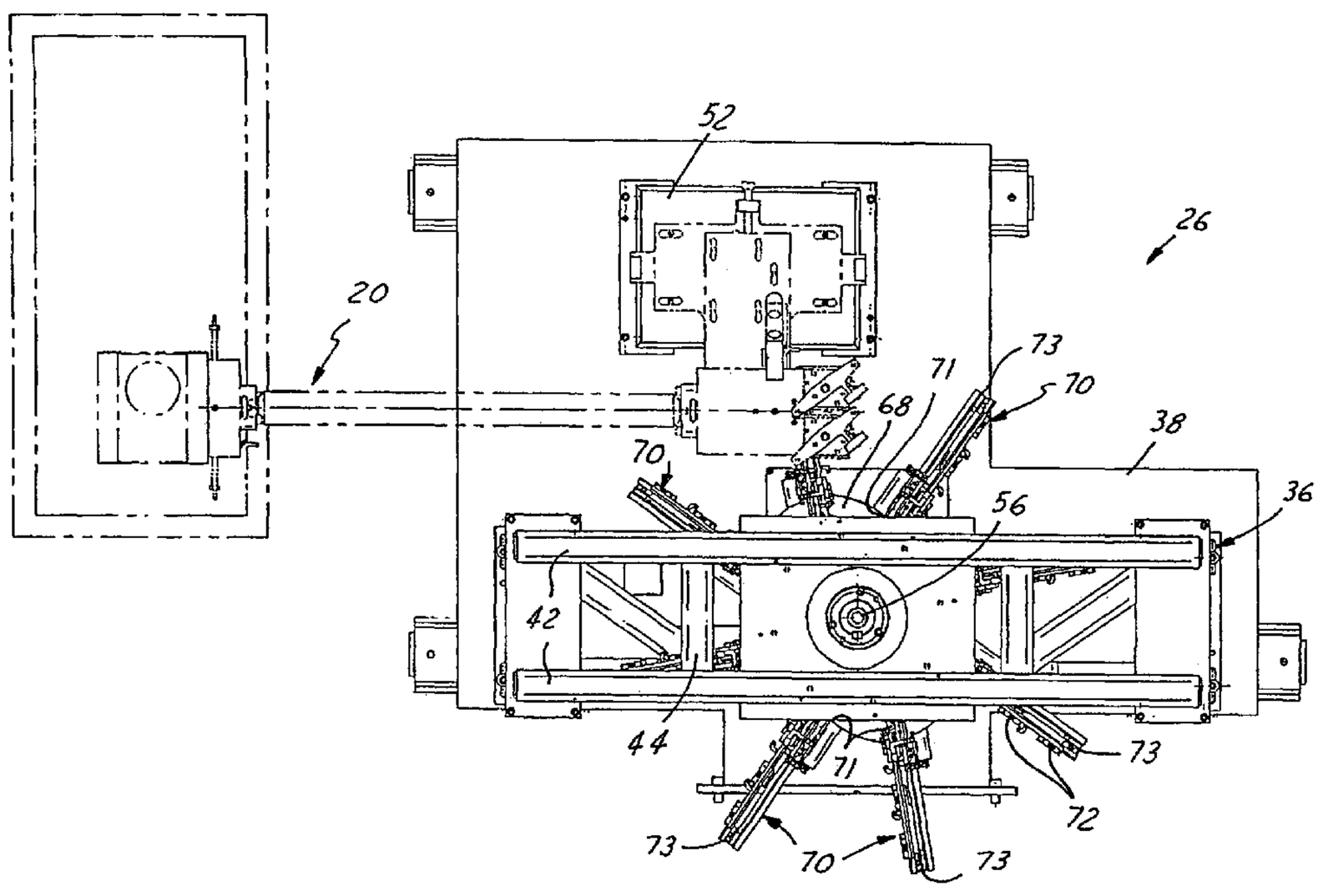

(57) Abstract: An apparatus for transferring a charge of plastic material to a molding machine having a mold with a mold cavity (24). The transfer apparatus includes a hub (66) rotated about an axis (56), at least one arm (70) extending generally radially from the hub to rotate with the hub around the axis (56), and a cam system (74) operably coupled to the arm (70) for moving the arm along a path with respect to the axis (56) as the hub and the arm rotate around the axis. In one embodiment, at least a portion of the arm travels along a plane that is parallel to the axis during a portion of the path.

WO 2005/099986 A1

WO 2005/099986 A1

SE, SI, SK, TR), OAPI (BF, BJ, CF, CG, CI, CM, GA, GN, GQ, GW, ML, MR, NE, SN, TD, TG).

Published:

— *with international search report*

For two-letter codes and other abbreviations, refer to the "Guidance Notes on Codes and Abbreviations" appearing at the beginning of each regular issue of the PCT Gazette.

PELLET TRANSFER APPARATUS AND METHOD

Field of the Invention

This invention relates generally to molding plastic articles and more particularly to an apparatus for providing charges of plastic to a molding machine.

Background

Various plastic articles, such as plastic closures for containers, have been formed by a compression molding process. Some compression molding machines have a plurality of tools mounted in a circumferential array on a rotatable turret in a plurality of opposed coacting pairs. The tools of each pair carry opposed male and female mold sections that when closed together form a cavity in which plastic articles may be compression molded. During a portion of the rotation of the turret, the mold tooling pairs are moved toward each other for compression molding articles between the tooling pairs and away from each other for releasing articles molded between the tooling pairs and to receive fresh charges of plastic into the mold cavities. The charges of plastic may be taken and delivered from a stream extricate from an extruder providing a relatively rapidly available supply of plastic material for the molding machine.

Summary of the Invention

A transfer apparatus and method for delivering a charge of plastic material to, for example, a mold cavity. The transfer apparatus includes a hub rotatable about an axis, at least one arm extending generally radially from the hub to rotate with the hub around the axis, and a cam system operably associated with the arm for moving the arm in a direction with respect to the axis as the hub and the arm rotate around the axis. In one embodiment, at least a portion of the arm travels along a plane that is parallel to the axis during a portion of the path of movement of the arm.

In one implementation, a molding machine includes a turret rotatable

about an axis that is parallel to the axis about which the hub rotates. A plurality of molds are carried by the turret for movement in an endless path with each mold preferably including at least one radially aligned pair of mold cavities. Correspondingly, each arm of the transfer apparatus preferably includes two sets of tooling with each set adapted to deliver a separate mold charge into a separate one of the mold cavities. To facilitate aligning the tooling sets with the mold cavities, the arm is preferably angularly, radially and/or axially pivoted relative to the hub. In one embodiment, a point midway between the tooling sets on each arm is moved along a plane during a portion of the movement of the arm wherein the mold charges are transferred to the mold cavities. The planar motion preferably includes an axial component wherein the arm is moved axially toward the mold cavities to facilitate release of the mold charges from the tooling.

Brief Description of the Drawings

These and other features of various embodiments of the present invention will be apparent from the following detailed description, appended claims and accompanying drawings in which:

FIG. 1 is a perspective view of one embodiment of an apparatus for compression molding plastic articles including one embodiment of a pellet cutter and transfer apparatus;

FIG. 2 is a perspective view of the pellet cutter and transfer apparatus of FIG. 1;

FIG. 3 is a plan view illustrating an extruder and the pellet cutter and transfer apparatus;

FIG. 4 is a plan view of the pellet cutter and transfer apparatus with a portion of a frame of the apparatus removed;

FIG. 5 is a perspective view of one arm and associated tooling of the pellet cutter and transfer apparatus;

FIG. 6 is a rear perspective view of the arm shown in FIG. 5;

FIG. 7 is a side view of the arm;

FIG. 8 is a plan view of the arm;

FIG. 9 is a side view of a base plate of the arm;

FIG. 10 is a perspective view of a second plate of the arm;

FIG. 11 is a side view of the second plate;

FIG. 12 is a plan view of the second plate;

FIG. 13 is a perspective view of a third plate of the arm;

FIG. 14 is a side view of the third plate;

FIG. 15 is a plan view of the third plate;

FIG. 16 is an end view of the third plate;

FIG. 17 is a perspective view of a gripper latch of the arm;

FIG. 18 is a side view of the gripper latch;

FIG. 19 is a bottom view of the gripper latch;

FIG. 20 is a perspective view of one embodiment of a lift latch;

FIG. 21 is a side view of the lift latch;

FIG. 22 is a plan view of the lift latch;

FIG. 23 is a view of the lift latch taken in the direction of the arrows 23-23 in FIG. 22;

FIG. 24 is a bottom view of a cam plate assembly of the pellet cutter and transfer apparatus;

FIG. 25 is a side view of the cam plate assembly;

FIG. 26 is another side view illustrating a different portion of the cam plate assembly;

FIG. 27 is a side view illustrating yet another portion of the cam plate assembly;

FIG. 28 is a perspective view of the tooling on an arm of the pellet cutter and transfer apparatus;

FIG. 29 is a side view of a two sets of tooling carried by the arm of the pellet cutter and transfer apparatus;

FIG. 30 is a plan view of the tooling;

FIG. 31 is a perspective view of an alternate embodiment of a lift

latch;

FIG. 32 is a side view of the lift latch of FIG. 31;

FIG. 33 is an end view of the lift latch;

FIG. 34 is a diagrammatic view illustrating the movement of an arm of the pellet cutter and transfer apparatus relative to an axis about which the arm is driven;

FIG. 35 is a diagrammatic view illustrating the movement of an arm of the pellet cutter and transfer apparatus relative to the axis about which the arm is driven and relative to the path of travel of mold cavities of a molding machine; and

FIG. 36 is a fragmentary side elevational view illustrating a portion of an arm of the pellet cutter and transfer apparatus according to an alternate embodiment of the invention.

Detailed Description

Referring in more detail to the drawings, FIG. 1 illustrates one embodiment of a system for compression molding plastic articles, such as preforms that are subsequently molded into plastic containers. The system 10 includes a compression molding machine 14 that preferably includes a rotary turret 16 with a plurality of pairs of mold tooling 18 disposed about the periphery of the turret 16 in an endless path (in FIG. 1, some mold tooling pairs have been removed to show the turret 16). An extruder 20 provides molten plastic material that is delivered to the mold tooling pairs 18 to form the plastic articles. The extruded material is delivered to the mold cavities 24 by a pellet cutter and transfer apparatus 26 that preferably accurately cuts the extruded material into desired sized mold charge pellets 28 (FIG. 35) and delivers the pellets 28 or plastic charges into cavities 24 of the mold tooling pairs 18.

Desirably, the mold tooling pairs 18 are open during a portion of the rotary movement of the turret 16 to permit the formed plastic articles to be

removed from and fresh mold pellet charges 28 to be delivered into the mold cavities 24. To increase the productivity and efficiency of the system 10, the mold tooling pairs 18 are preferably separated for a limited duration of the molding cycle. This increases the time during the cycle for compression molding and permits an increased rotary speed of the compression molding apparatus 14. Accordingly, in one presently preferred embodiment, the pellet cutter 26 is constructed and arranged to be disposed generally beneath at least a portion of the take-out apparatus 30 so that as the take-out apparatus 30 is removing plastic articles from the tooling pairs 18, the pellet cutter and transfer apparatus 26 is delivering fresh plastic charges 28 into the mold cavities 24.

As best shown in FIGS. 2-4, the pellet cutter and transfer apparatus 26 preferably includes a main frame 36 having a base 38, a plurality of posts 40 extending from the base 38 and interconnected by appropriate beams 42 and cross supports 44 providing a rigid structure. Desirably, an end 48 of the extruder 20 including a pair of outlets 50 of the extruder 20 is carried on a sub frame 52 mounted on the base 38 for communication with the pellet cutter and transfer apparatus 26. Desirably, the mold tooling 18 of the compression molding apparatus 14 includes mold cavities 24 in radially aligned pairs, and the extruder outlets 50 provide two streams of extruded material 20 that are metered and delivered by the pellet cutter and transfer apparatus 26.

The pellet cutter and transfer apparatus 26 includes a main shaft 54 driven for rotation about its longitudinal axis 56 by a motor 58 through an appropriate gearbox 60 mounted on the base 38. The shaft 54 is preferably journalled for rotation by bearings 62 disposed in a collar 64 that may be fixed to the frame 36. A hub 66 is operably connected to the shaft 54 for co-rotation with the shaft 54 relative to the frame 36 and the extruder outlets 50. The hub 66 preferably includes a pair of axially spaced plates 68. At least one and preferably a plurality of arms 70 extend generally radially outwardly from the hub 66, are connected at one end 146 to the hub 66 for rotation with the hub

66, and are generally free at their other end 144 (FIGS. 6-7). The arms 70 preferably include two sets of tooling 72 with each set of tooling 72 being aligned with one of the outlets 50 of the extruder 20 to cut pellets 28 from the associated stream of extruded material 20 and carry and deliver the pellets 28 to the compression molding machine 14.

A cam system 74 (FIGS. 24-27) is carried by the frame 36 and operably associated with the arms 70 such that the arms 70 are displaced relative to the hub 66 as the hub 66 and the arms 70 are rotated relative to the cam system 74. Desirably, each arm 70 includes at least one and preferably a plurality of followers that are responsive to the contour of one or more cam surfaces on the cam system 74 to provide a desired radial, axial and angular motion of each arm 70 relative to the extruder outlets 50, as well as to the mold cavities 24 of the compression molding machine 14. Preferably, during at least a portion of the rotation of the hub 66, each set of tooling 72 on an arm 70 is axially aligned with a cavity 24 of a mold tooling pair 18. Preferably, as will be set forth in more detail below, the arms 70 are driven so that the path of travel of the sets of tooling 72 matches or is closely aligned with the path of travel of the mold cavities 24 along a desired angular extent of the rotation of the compression molding turret to facilitate delivery of the plastic charges into the mold cavities 24.

As best shown in FIGS. 6-9, each pellet cutter arm 70 includes a base plate 78 extending laterally with an angled or generally transverse support 80 terminating in a cylindrical and tubular wall 82. A pivot shaft 84 is journalled for rotation in the cylindrical wall 82, such as by needle bearings 76, preferably with opposed ends of the shaft 84 extending axially from the cylindrical wall 82. In this manner, the pivot shaft 84 can be coupled to or carried by the upper and lower plates 68 of the hub 66 to define a pivot axis 86 about which the arm 70 pivots. The pivot axis 86 is preferably parallel to the rotational axis 56 of the main shaft 54, which is likewise parallel to the rotational axis 88 (FIGS. 1 and 35) of the turret 16 of the compression

molding machine 14. In this manner, the arm 70 is mounted to the hub 66 by a trunnion-like arrangement permitting relatively free pivotal or angular movement of the arm 70 relative to the hub 66. As best shown in FIG. 9, the base plate 78 preferably includes a pair of laterally extending and parallel rails 92 on which are mounted suitable slide blocks 94 providing linear bearings carried by the base plate 78. The linear bearings are preferably arranged generally perpendicular to the pivot axis 86 of the base plate 78. A laterally extending flange 96 preferably includes a first cam follower 98 rotatably carried on a shaft 99 fixed to the flange 96. The first cam follower 98 is responsive to the contour of a corresponding cam surface or cam track of the cam system 74 to pivot the base plate 78 about the pivot axis 86 as desired.

As best shown in FIGS. 5-8 and 10-12, an intermediate plate 100 is preferably mounted to the base plate 78 by the blocks 94 such that the intermediate plate 100 is slidably carried by the base plate 78. A plurality of fasteners may be disposed through a plurality of bores 106 in the intermediate plate 100 to connect the intermediate plate 100 to the blocks 94 of the base plate 78. Desirably, the intermediate plate 100 slides laterally relative to the base plate 78 in a direction that is generally perpendicular to the pivot axis 86. The intermediate plate 100 includes an outwardly extending bracket 108 with a second cam follower 110 rotatably mounted on a shaft 109 carried by the bracket 108. The second cam follower 110 is responsive to the contour of a corresponding cam surface of the cam system 74 to slidably move the intermediate plate 100 relative to the base plate 78 as desired. The intermediate plate 100 also includes at least one and preferably a pair of rails 111 with each rail 111 including at least one block 112 slidably mounted on the rail 111 defining a linear bearing. Preferably, each rail 111 extends parallel to the pivot axis 86 and generally perpendicular to the rails 92 on the base plate 78. The intermediate plate 100 may include outwardly extending flanges 113 with through holes 114 adapted to receive support shafts 115 about which springs 116 may be mounted.

A generally U-shaped cam plate 118 having a contoured cam surface 119 is preferably carried by the intermediate plate 100. The cam plate 118 is preferably adjustably carried by the intermediate plate 100 by retaining blocks 120 fixed to the intermediate plate 100 and including opposed inwardly facing flanges 121 that overlie adjacent portions of the cam plate 118 to retain the cam plate 118. An adjustable mounting block, such as a jack block 122, is preferably carried in a slot 123 of the intermediate plate 100 to permit lateral adjustment of the cam plate 118 relative to the intermediate plate 100 via a jack screw 124.

As best shown in FIGS. 5-8 and 13-16, each arm 70 preferably includes a third plate 125 that is carried by the intermediate plate 100. The third plate125 is preferably fixed to the blocks 112 of the linear bearings on the intermediate plate 100 so that the third plate 125 can be slidably displaced relative to the intermediate plate 100 along the rails 111. Accordingly, the intermediate plate 100 is slidably moveable in a direction parallel to the pivot axis 86. The third plate 125 includes an upstanding bracket 126 on which a third cam follower 127 is rotatably mounted by a shaft 128 carried by the bracket 126. The third cam follower 127 is responsive to the contour of a corresponding cam surface or cam track of the cam system 74 to slidably displace the third plate 125 relative to the intermediate plate 100 and base plate 78, as desired.

A lateral slide 129 is preferably slidably carried by the third plate 125 through appropriate bearings or blocks 130 (FIG. 13) carried by the third, plate125. The slide 129 preferably extends generally perpendicular to the pivot axis 86 and hence perpendicular to the movement of the third plate 125 relative to the intermediate plate 100. The slide 129 preferably includes a fourth cam follower 131 rotatably carried by a shaft fixed to a flange 132 of the slide 129. The fourth cam follower 131 is responsive to the contour of a corresponding cam surface or cam track of the cam system 74 to drive the slide 129 relative to the third plate 125 in a direction generally perpendicular

to the pivot axis 86. A block 133 carried by the slide 129 may be received in a slot 134 formed in the third plate 125 and engageable with the end of the slot 134 to limit the movement of the slide 129 relative to the third plate 125. As will be discussed in more detail hereafter, one section of each set of tooling 72 is preferably fixed to the third plate 125 and another section of each set of tooling 72 is preferably carried by the slide 129 for movement with the slide 129 relative to the other section to open and close the sets of tooling 72.

As best shown in FIGS. 15 and 16, a fifth cam follower 135 is preferably rotatably carried by a shaft fixed to the third plate 125 for rotation about an axis 136 generally perpendicular to the pivot axis 86. The fifth cam follower 135 is disposed adjacent to and is responsive to the cam surface 119 of the cam plate 118 carried by the intermediate plate 100. One or more coolant passages may be formed in the third plate 125, or by conduits 138 extending from, through or about the third plate 125 to facilitate routing coolant to and from the arms 70 and tooling 72 of the pellet cutter and transfer apparatus 26.

The third plate 125 preferably includes a pair of outwardly extending flanges 140 with through holes 142 adapted to slidably receive the rods 115 carried by the intermediate plate 100 so that the third plate 125 and flanges 140 are slidably movable relative to the rods 115 and the intermediate plate 100. A spring 116 (see FIGS. 5-6) is preferably disposed around each rod 115 between the flange 96 of the intermediate plate 100 and the flange 140 of the third plate 125 to yieldably bias the third plate 125 relative to the intermediate plate 100. A stop block 144 is preferably carried by the third plate 125, such as by being fixed to the support bracket 126 for the third follower 127 or to the third plate 125.

As best shown in FIGS. 5-8 and 28-30, two sets of tooling 72 are preferably provided on each arm 70. The tooling sets 72 are preferably laterally spaced apart a distance equal to the spacing between the outlets 50 of the extruder 20 such that each tooling set 72 is aligned with a separate one of

the outlets 50 of the extruder 20. Each tooling set 72 includes a mounting plate 143 fixed to the third plate 125, a stationary gripper 144 carried by the mounting plate 68 and including an upstanding finger 145, and a moveable gripper 146 with a cavity 148 provided between the moveable gripper 146 and the stationary gripper 144. As best shown in FIGS. 5, 7 and 8, each moveable gripper 146 is carried by a separate bracket 147 that is fixed to the lateral slide 129 for movement relative to the finger 145 to vary the size of the cavity 148 to facilitate receiving, carrying and releasing plastic pellets. Preferably, the movable gripper 146 includes a radiused or arcuate inner surface 150 that defines part of the cavity 148 between the moveable gripper 146 and stationary gripper 144 in which the plastic charge or pellet is received. The radiused inner surface 150 may facilitate receiving a plastic pellet in the cavity 148, and improve the handling of the pellet after it is received in the cavity 148. Also, the shape of the cavity 148 defined by the grippers 144,146 can be constructed and arranged as desired to provide a desired contact or gripping of a pellet received therein, and may provide at least some shaping or forming of the pellet if desired.

Each tooling set 72 preferably also includes a knife 154 (shown in FIGS. 28-29, not shown in FIGS. 6-8) carried by the mounting plate 143 and having a thin and preferably sharp leading edge 155 adapted to cut or shear a stream of extruded material from the extruder 20 as the arm 70 is rotated past the outlets 50 of the extruder. Fluid conduits 156 lead to passages that are preferably formed in the moveable and stationary grippers 144,146 and in the knives 154 to circulate coolant through the grippers 144,146 and knives 154 in use. The tooling components are preferably formed of a material having high thermal conductivity to facilitate cooling of the components; they may also be formed from a nonstick or relatively low friction material to avoid or reduce adhesion or undue friction between the plastic pellets and the tooling 72. In one presently preferred embodiment, the knives 154 are formed from Ampco 940 to facilitate heat transfer away from the knives 154, and the grippers 144,

146 are formed from aluminum. The grippers 144,146 may be coated to prevent or inhibit corrosion. In one presently preferred implementation, the surfaces that contact the plastic pellets are preferably not coated, but may be vapor honed or otherwise treated for improved handling and release of the pellets.

As best shown in FIGS. 5, 7 and 17-19, a gripper latch 160 is carried by the arm 70 and associated with the tooling 72 to control at least in part the movement of the moveable gripper 146 relative to the stationary gripper 144. The gripper latch 160 includes a generally C-shaped bracket 162 that is fixed to the third plate 125 and journals for rotation about a shaft 164 extending through aligned bores 166 in the bracket 162. The shaft 164 is maintained on the bracket 162 by a pair of clamps 168 fixed to opposed ends of the shaft 164. One of the clamps 168 preferably includes an outwardly extending latch finger 170 adapted to engage a latch surface which may be a shoulder 172 (FIG. 8) formed in the lateral slide 129 carried by the third plate 125. When the latch finger 170 is engaged with the latch surface 172, the horizontal slide 129 is prevented from moving to prevent movement of the moveable grippers 146 of the tooling 72. In one presently preferred embodiment, the other clamp 168 includes a bracket 173 that receives a pivot shaft 174 via a trunnion mount. The trunnion mount is acted upon by a spring 176 that is operably associated with a flange 177 (such as by a clevis arrangement) that is fixed to the C-shaped bracket 162 to yieldably bias the latch finger 170 away from the latch surface 172 so that the gripper latch 160 is normally open, or unlatched. To close the latch 160 by moving the latch finger 170 into engagement with the latch surface 172, a sixth cam follower 179 is preferably associated with the latch finger 170 and is responsive to the contour of a corresponding cam surface of the cam system 74 to rotate the latch finger 170 about the axis of the shaft 164 when it is desired to close the latch 160. The spring 176 may be enclosed in a retainer 178 that maintains the position and orientation of the spring 176.

A lift latch assembly 180 (FIGS. 20-23) is preferably carried by the arm 70 to selectively prevent vertical movement of the third plate 125 relative to the intermediate plate 100. It holds the third plate 125 up against the bias of the springs 116 (FIG. 6) tending to drive the third plate 125 down so that when the latch 180 is released the third plate 125 drops under the force of gravity and the force of the springs 116.

The lift latch 180 includes a main body 181 preferably fixed to the intermediate plate 100 with a shaft 182 extending through the body 181 so that opposed ends of the shaft 182 extend outwardly from the body 181. A latch finger 183 is disposed on one end of the shaft 182 by an appropriate clamp 184 that may be integrally formed with the finger 183. A seventh follower 185 is coupled to the finger 183 to drive the finger 183 between its latched and unlatched positions. The latch finger 183 preferably includes a shoulder 186 adapted to engage a latch surface on the third plate 125, such as a stop surface 187 (FIGS. 13 and 16) on the block 144, to prevent downward movement of the third plate 125 when the latch finger 183 is engaged with the latch surface187.

At the other end of the shaft 182, a second clamp 188 is preferably fixed to the shaft 182 and is yieldably biased by a spring 189. The spring 189 may be received in a spring retainer 190 carried by a shaft 182 that is fixed to a bracket 192 that is in turn carried by the body 181. One end of the spring 189 is operably coupled to a clevis 193 carried by the second clamp 188 to yieldably bias the latch finger 183 into engagement with the latch surface 187. In this manner, the lift latch 180 can be considered to be normally closed or latched and is moved to an open position or unlatched position by engagement of the seventh follower 185 with a corresponding cam surface. To facilitate adjustment of the vertical position of the third plate 125, and hence of the tooling 72 carried by the third plate 125, a jack block 194 may be provided to permit adjustment of the lift latch 180 relative to the intermediate plate 100 to thereby adjust the position in which the latch finger 183 engages the latch

surface 187 on the third plate 125.

As best shown in FIGS. 24-27, the cam system 74 in one presently preferred embodiment includes a plurality of cam plates each including at least one cam surface or cam track. For ease of viewing the hub 66 and arms 70, the cam plates have been removed from FIGS. 2-4. A first or lower cam plate 196 is carried by a support plate and block 197 and preferably includes a cam track 198 in which the first follower 98 carried by the base plate 78 is received to control the pivotal or angular movement of the arm 70 about the pivot axis 86. This cam track or surface 198 is preferably circumferentially continuous so that the first follower 98 is generally continuously engaged with the cam track 198 to control the pivoted or angular movement and orientation of the arm 70.

A second cam plate 200 preferably includes a cam surface 202 or track 15 adapted to receive the second cam follower 110 carried by the intermediate plate 100 of the arm 70 to drive the intermediate plate 100 for lateral movement relative to the base plate 78. The cam track 202 is preferably circumferentially continuous so that the second cam follower 110 is received in the cam track 202 throughout the rotation of the hub 66 to maintain control of the horizontal position of the intermediate plate 100 and the third plate 125 that is carried by the intermediate plate 100. Since the arms 70 extend generally radially from the hub 66 (with pivoted or angular movement relative to the hub 66), the contour of the cam surface 202 drives the second cam follower 110 and the intermediate plate 100 generally radially relative to the axis of the shaft 54 and hub 66.

A third cam plate 204 is preferably carried by a bracket 206 fixed to the frame 36 or support 197 and includes a cam surface 208 adapted to engage the fourth follower 131 associated with the lateral slide 129. Hence, changes in the contour of this cam surface 208 drive the movable grippers 146 relative to the stationary grippers. 144 to thereby open the tooling 72 for receipt of a plastic mold charge pellet therein.

A fourth cam plate 210 is preferably carried by the frame 36 and includes a cam surface 212 adapted to engage the third follower 127 carried by the third plate 125 during a portion of each revolution of the hub 66 to raise the third plate 125 relative to the base plate 78 and axially or vertically position the tooling 72 relative to the outlets 50 of the extruder 20. Raising the third plate 125 preferably engages the latch surface 187 with the latch finger 183 of the lift latch 180 to hold the third plate 125 in its raised position. Accordingly, with the third plate 125 maintained in its raised position by the latch 180 the arcuate extent or circumferential length of the cam surface 212 of the fourth cam plate 210 can be limited since engagement of the third follower 127 with the cam surface 212 is not needed to maintain the vertical position of the third plate 125.

A fifth cam plate 214 is preferably carried by a bracket 216 fixed to the frame 36 or support 197. The fifth cam plate 214 has a cam surface 218 adapted to engage the seventh follower 185 that is associated with the lift latch finger 183 to release the lift latch 180, or displace the latch finger 183 from the latch surface 187, when desired. Preferably, in the same general area of the hub 66 and the cam system 74, a sixth cam plate 219 preferably integral with or carried by the same bracket 216 that carries the fifth cam plate 214, is provided and has a cam surface 220 adapted to engage the third follower 127 carried by the third plate 125 so that when the lift latch 180 is released, the third plate 125 is supported by engagement of the third follower 127 with the cam surface 220. The cam surface 220 of the sixth cam plate 219 preferably is contoured to permit vertical displacement of the third plate 125 relative to the base plate 78, and this movement may be in a downward direction to facilitate releasing a pellet or charge of plastic from the tooling 72.

In one rotation of the hub 66, each pellet cutter arm 70 cuts the stream of extruded material from each of the pair of extruder outlets 50 forming two pellets or plastic charges carried by arm 70 for delivery to the compression molding machine 14. In more detail, before an arm is swept past the extruder

outlets 50, the arm and associated components are in the following state: the sets of tooling 72 are moved to their open position by engagement of the fourth follower 131 (carried by the lateral slide 129) with the cam surface 208 on the third cam plate 204 driving the movable grippers 146 away from their associated stationary grippers 144; the third plate 125 is raised upwardly relative to the base plate 78 by engagement of the third follower 127 with the cam surface 212 on the fourth cam plate 210 so that the lift latch 180 is engaged with the third plate 125 to hold it in its raised position; the cavity 148 20 of each gripper pair 144,146 is radially aligned with the extruder outlets 50 as controlled by engagement of the second cam follower 110 with the cam surface 202 of the second cam plate 200 which moves the intermediate plate 100 relative to the base plate 78; and the arm 70 is pivoted about the pivot axis 86 by engagement of the first follower 98 with the cam surface 198 of the first cam plate 196 so that the free end 73 of the arm 70 is inclined forwardly relative to a line 222 (FIG. 34) extending radially from the rotational axis 56 to the fixed end 71 of the arm 70. To get into this angular position, the free end 73 of the arm 70 is accelerated relative to the speed of rotation of the hub 66 as the arm 70 is pivoted.

As best shown in FIG. 34, as the arm 70 approaches the area of the extruder outlets 50, the free end 73 of the arm 70 is decelerated relative to the hub 66 by pivoting the arm 70 about the pivot axis 86, and the intermediate plate 100 is moved radially relative to the base plate 78 (as controlled by engagement of the second follower 110 with the cam surface 202 of the second cam plate 200) so that the arm 70 travels in a straight line as the arm 70 is swept through the area of the extruder outlets 50. FIG. 34 diagrammatically illustrates three positions of an arm 70 as it is moved through the area of the extruder outlets 50. In position A the free end 73 of the arm 70 leads the pivoted end 71 of the arm 70 relative to the radial line 222. In position B the free end 73 and pivoted end 71 of the arm 70 are radially aligned. And in position C the free end 73 of the arm trails the pivoted end 71

of the arm 70 relative to a radial line 224 extending from the axis 56 to the pivoted end 71 of the arm 70. This facilitates accurately cutting the extruded material streams with the knives 154 and capturing the cut plastic pellets in the tooling 72.

After the plastic pellets are cut from the extruded material streams, the sets of tooling 72 are closed by a suitable biasing member, such as a spring, acting on the tooling 72 to relatively quickly and preferably gently close the sets of tooling 72 on the plastic pellets. If desired, the sets of tooling 72 can compress, stretch or otherwise form the plastic pellets into a desired shape for subsequent delivery and molding in a mold cavity 24.

With the plastic pellets captured in the sets of tooling 72, subsequent rotation of the hub 66 positions the arm 70 to deliver the plastic charges into the mold cavities 24. To facilitate aligning the gripper cavities 148 with the associated mold cavities 24, the arm 70 and cam system 74 are constructed so .that a midpoint 230 (see FIG. 35) between the sets of tooling 72 on each arm 70 travels along a plane 232 during the portion of the hub 66 rotation wherein the mold charge pellets 28 carried by the sets of tooling 72 are generally aligned with the mold cavities 24. To do this, the arm 70 is pivoted by engagement of the first follower 98 with the cam surface 198 of the first cam plate 196 so that the free end 73 of the arm 70 leads or is advanced forward relative to a line 234 extending radially from the rotational axis 56 to the pivoted end 71 of the arm 70. The arm 70 is preferably inclined relative to this radial line 234 by between about 10 and 50 degrees, more preferably between about 20 to 40 degrees, and most preferably about 25 to 35 degrees. The intermediate plate 100 is also driven relative to the base plate 78 to radially align the sets of tooling 72 with the mold cavities 24.

As best shown in FIG. 35, when the arm 70 is swept through the area of the mold cavities 24, the free end 73 of the arm 70 is decelerated relative to the hub 66 by pivoting the arm 70 about the pivot axis 86, and the intermediate plate 100 is driven radially or laterally so that the midpoint 230

between the tooling sets 72 is moved generally along the plane 232. Since in one presently preferred embodiment the mold cavities 24 are radially aligned relative to the rotational axis 88 of the compression molding turret 16 and are moving along an arcuate path defined by the turret 16, the arm 70 is desirably pivoted at a rate that is a function of the angular rotational speed of the compression molding turret 16. This enables the cavity 148 of each gripper 72 to be axially aligned with an associated mold cavity 24 over an arc long enough to initially align the pellets 28 carried by the grippers 72 with the corresponding mold cavities 24 and deliver the plastic pellets 28 into the mold cavities 24. Preferably, the midpoint 230 between the cavities 148 of the sets of tooling 72 travels generally along the plane 232 over at least 10 to 70 degrees of hub rotation, and more preferably over 40 to 50 degrees of hub rotation, although other ranges or values may be employed for a particular application. In this range of hub rotation, the arm 70 is preferably generally radially aligned with the rotational axis 88 of the compression molding machine turret 16.

The plane 232 is preferably generally perpendicular to a plane 233 including the rotational axis 88 of the turret 16 and the axis 56 of the hub 66, although the plane 232 can be inclined relative to the plane 233 by an acute included angle of up to about 10 degrees. In the presently preferred embodiment, the pellets are preferably delivered into the corresponding mold cavities during a window of hub 66 rotation that begins about 25 degrees before the plane 233 and continues until about 25 degrees after the plane 233, over about 50 degrees of hub rotation as noted above.

The arm 70 moves from a first position, labeled 'D' in FIG. 35 wherein the free end 73 leads the pivoted end 71 relative to a radial line 234 extending to the pivoted end 71 of the arm 70, through a position labeled 'E' in FIG. 35 wherein the free end 73 of the arm 70 is radially aligned with the pivoted end 71 and to a position 'F' wherein the free end 73 of the arm 70 trails the pivoted end 71 of the arm 70 relative to a radial line 236 extending to the pivoted end

71 of the arm 70. At the end of this portion of the hub rotation, the free end 73 of the arm 70 may trail the pivoted end 71 relative to a radius 236 of the hub 66 extending to the pivoted end 71 of the arm 70 by between about 15 to 45 degrees, and more preferably by between 25 to 30 degrees, although other orientations and movement of the arms 70 may be employed. In one presently preferred embodiment, the gripper cavities 148 are sufficiently aligned with the mold cavities 24 to deliver plastic charges into the mold cavities 24 over at least some and preferably a substantial portion of this range of hub rotation.

When the sets of tooling 72 are aligned with the associated mold cavities 24, the third follower 127 carried by the third plate 125 is engaged with a cam surface 220 on the sixth cam plate 219 to raise the third plate 125 relative to the intermediate plate 100 and disengage the latch surface 187 from the lift latch finger 183. The lift latch follower 185 is then engaged with the cam surface 218 on the fifth cam plate 214 to open or release the lift latch 180 so the latch finger 183 is disengaged from the third plate 125. The springs 116 bias the third plate 125 downwardly maintaining the third follower 127 engaged with the cam surface 220 on the sixth cam plate 219 which has a sharply axially declining section permitting rapid lowering of the third plate 125 relative to the base plate 78 under the force of gravity and the springs. 116. The downward movement of the third plate 125 moves the fifth follower 135 relative to the cam plate 118 which is contoured to move the lateral slide 129 in a direction driving the movable grippers 146 away from their associated stationary grippers 144 to open the sets of tooling 72 at a desired rate and time and facilitate releasing the plastic pellets 28 from the sets of tooling 72 as the third plate 125 is dropping or moving axially downwardly. The cam surface 220 of the sixth cam plate 219 preferably includes a laterally extending finish section 240 (FIG. 26) that stops or slows the downward travel of the third plate 125 so that the downward inertia of the plastic pellets 28 ensures that they are released from the sets of tooling 72. In this manner, the plastic pellets 28 are transferred from the sets of tooling 72 to the mold

cavities 24. The downward or axial travel of the tooling 72 preferably occurs over a range of between 5 and 25 degrees of hub rotation, although other arrangements maybe employed. After the pellets have been transferred to the mold cavities 24, the arm 70 is positioned as described above for movement past the extruder outlets 50 to cut and gather the next pair of mold charge pellets 28 to be delivered by that arm 70.

In one presently preferred embodiment, the pellet cutter and transfer apparatus 26 includes eight arms 70 (FIG. 4) generally evenly circumferentially spaced about the hub 66. Accordingly, for each rotation of the hub 66, sixteen mold charge pellets 28 are delivered. Also in one presently preferred embodiment, the compression molding machine 14 with which the pellet cutter and transfer apparatus 26 is used, has forty (40) mold tooling pairs 18 with each mold tooling pair 18 including four (4) mold cavities 24. Thus, each rotation of the hub 66 supplies the plastic charges for four (4) of the mold tooling pairs 18 of the compression molding machine 14, and to fill every mold cavity 24 the hub 66 must be rotated ten (10) times for each rotation of the turret 16 of the compression molding machine 14. Accordingly, the hub 66 is preferably rotated at a speed that is a function of the speed of rotation of the turret 16 of the compression molding machine 14. Preferably, the motor 58 that rotates the hub 66 is servo-controlled and communicated with a controller that either controls or is informed of the speed of rotation of the compression molding turret 16 so that the pellet cutter and transfer apparatus 26 is synchronized with the compression molding turret 16.

Upon initial start-up of the pellet cutter and transfer apparatus 26, it may be necessary or desirable to reject or discard a certain number of plastic pellets. This may be necessary or desirable to ensure that the extruded material streams are flowing at a desired rate so that the plastic pellets are of the proper size and volume. To facilitate rejecting plastic pellets, the gripper latch 160, which is normally unlatched or open, may be engaged or closed by a movable cam plate 242 (FIG. 17) that is aligned with the sixth follower 179 carried by

the gripper latch finger 170 only when plastic pellets are to be rejected. The gripper latch 160 holds the sets of tooling 72 open (with the movable grippers 146 moved away from the stationary grippers 144) so that the tooling 72 does not closely engage or hold the plastic pellets. To ensure that the pellets are removed from the tooling 72, a reject mechanism 244 (FIG. 2) can be provided downstream of the extruder outlets 50 and axially aligned with the cavities of the sets of tooling 72. The reject mechanism 244 may have, for example, one or more jet or nozzles adapted to provide a stream or burst of a pressurized fluid (such as air or water) that drives the pellets 28 to be rejected out of the sets of tooling 72 as they are moved past the nozzles. When it is desired to cease rejecting plastic pellets, the reject mechanism 244 is turned off and the movable cam plate 242 is moved so that it no longer engages the sixth follower 179 of the first latch 160, which returns to its open or unlatched position 202 under the force of the spring 176 so that the sets of tooling 72 can be closed on the pellets 28 as described above.

A second embodiment of a lift latch 250 is shown in FIGS. 31-33. This lift latch 250 includes a latch finger 252 carried by the bracket 126 on the third plate 125 that carries the third follower 127, and a slidable catch assembly 254 carried on a bracket 256 fixed to the intermediate plate 100 of the arm 70. The latch finger 252 includes a shoulder 257 adapted to be selectively engaged with a catch plate 258 of the catch assembly 254 to releasably hold the third plate 125 in a raised position as described with reference to the first embodiment lift latch 180.

The catch assembly 254 includes a slide block 260, a support block 262, a slide 264, a cam follower 266 and the catch plate 258. The slide block 262 is carried by the bracket 256 so that a bore (not shown) in the slide block 262 is aligned with a bore 272 in the support block 262. The slide 264 preferably includes a generally cylindrical shaft portion 274 slidably received in the bores of the blocks 260, 262 preferably with bearings disposed between them. One end of the slide 264 is coupled to the cam follower 266 so that the

slide 264 is driven relative to the slide block 260 in response to changes in the contour of a corresponding cam surface. The catch plate 258 is coupled to the slide 264 for co-movement with the slide 264 relative to the latch finger 252 and is preferably slidably received in a slot 276 formed in the slide block 260. The catch plate 258 and slide 264 move between a latched position wherein the shoulder 257 of the finger 252 overlies at least a portion of the catch plate 258 and an open position wherein the catch plate 258 is spaced from the latch finger 252.

When it is desired to latch the third plate 125 in a raised position to cut and receive in the tooling 72 a pair of plastic pellets, the third plate 125 is raised relative to the intermediate plate 100, and when the shoulder 257 of the latch finger 252 clears (i.e. is raised above) the level of the catch plate 258, the slide 264 may be driven toward the latched position wherein a portion of the catch plate 258 is disposed beneath the shoulder 257 of the latch finger 252. The third plate 125 can be lowered to engage the latch finger 252 with the catch plate 258, and thereafter the third plate 125 may be supported by the latch assembly 250. To unlatch the third plate 125 so that it may be lowered to discharge the plastic pellets 28, the third plate 125 is preferably raised slightly to disengage the latch finger 252 from the catch plate 258. The slide 264 is then moved toward its open position so that the catch plate 258 is not disposed beneath the latch finger 252 and subsequent downward movement of the third plate 125 does not engage the latch finger 252 with the catch plate 258.

In addition to the modified lift latch 250, the arm 70 may be modified as shown in FIGS. 31-33, to include an extended flange 280 on the intermediate plate 100 with an opening 282 that receives a shaft 284 about which a spring 286 is provided. One end of the spring 286 engages the flange 280 and the other end of the spring 286 engages a flange 288 extending from the bracket 126 on the third plate 125. In this manner, the third plate 125 is yieldably biased axially downwardly relative to the intermediate plate 100 of the arm 70. The spring 286 of this embodiment may be used in addition to or

may replace one or both of the springs 116 disposed between the intermediate plate 100 and the third plate 125 as set forth above.

As best shown in FIG. 36, another cam follower 290 maybe carried on the arm 70, preferably by the third plate 125. The cam follower 290 preferably rotates about a shaft carried by a bracket 292 fixed to the third plate 125. The shaft preferably extends generally perpendicular to the pivot axis 86 and parallel to the lateral movement of the intermediate plate 100 relative to the base plate 78. The cam follower 290 is adapted to engage a cam surface 294 of a cam plate 296 provided between the extruder heads to provide a consistent axial position reference for the tooling 72, and specifically for the knives 154 relative to the extruder outlets 50. The cam follower 290 also supports the arm 70 against torsional forces tending to twist the arm 70 such as may be caused by deceleration of the free end 73 of the arm 70 as it is swept past the extruder outlets 50.

While certain preferred embodiments and constructions and arrangements of particular components of the compression molding apparatus, the pellet cutter and transfer apparatus, and method of delivering mold charge pellets to a mold cavity have been shown and described herein, one of ordinary skill in this art will readily understand that modifications and substitutions can be made. For example, without limitation, while in the presently preferred embodiments two extrudate streams are provided to enable simultaneous delivery of two mold charge pellets, the invention can be practiced to deliver a single mold charge pellet or more than two mold charge pellets. Of course, other modifications and substitutions will be apparent from this disclosure. Further, relative adjectives like "upper," "lower," "central," "downward", and the like are used to describe features of the apparatus and method with respect to the position and orientation of such features as shown in the accompanying drawings of the presently preferred embodiments.

Claims:

1. Apparatus for transferring charges to mold cavities mounted for rotation about a first axis, the transfer apparatus including:

a hub rotational around a second axis parallel to the first axis,

at least one arm extending generally radially from the hub to rotate with the hub around the second axis, and.

a cam system operatively coupled to the arm for moving the arm in at least one direction with respect to the second axis as the hub and the arm rotate around the second axis.

2. The apparatus of claim 1, wherein the cam system includes a cam arrangement for moving the arm radially inwardly and outwardly with respect to the second axis as a function of rotation around the second axis.

3. The apparatus of claim 1, wherein the cam system includes a cam arrangement for moving said arm angularly with respect to the hub as a function of rotation of the hub and the arm around the second axis.

4. The apparatus of claim 1, wherein the cam system includes a cam arrangement for moving the arm axially parallel to the second axis as a function of rotation around the second axis.

5. The apparatus of claim 1, wherein the cam system includes a cam arrangement for moving the arm radially inwardly and outwardly with respect to the second axis as a function of rotation around the second axis, and for moving the arm angularly with respect to the hub as a function of rotation of the hub and the arm around the second axis.

6. The apparatus of claim 1, wherein the cam system includes a cam arrangement for

moving the arm radially inwardly and outwardly with respect to the second axis as a function of rotation around the second axis and for moving the arm axially parallel to the second axis as a function of rotation around the second axis.

7. The apparatus of claim 1, wherein the cam system includes a cam arrangement for moving the arm angularly with respect to the hub as a function of rotation of the hub and the arm around the second axis and for moving the arm axially parallel to the second axis as a function of rotation around the second axis.

8. The apparatus of claim 1, wherein the cam system includes a cam arrangement for moving the arm radially, axially and angularly with respect to the second axis as a function of rotation around the second axis.

9. The apparatus of claim 1, wherein the arm includes a pivot shaft carried by the hub and defining a pivot axis about which the arm is pivoted, the pivot axis being parallel to the second axis.

10. The apparatus of claim 9, wherein the arm includes a base plate that is operably connected to the pivot shaft.

11. The apparatus of claim 10, wherein the arm includes a slide plate carried by the base plate for movement along the base plate generally radially with respect to the second axis, the slide plate being responsive to the contour of a cam surface of the cam system to drive the slide plate relative to the base plate.

12. The apparatus of claim 10, wherein the arm includes a plate carried by the base plate for movement along the base plate generally axially with respect to the second axis, the plate being responsive to the contour of a cam surface of the cam system to control movement of the plate relative to the base plate.

13. The apparatus of claim 10, wherein the arm includes an intermediate plate carried by the base plate for radial movement relative to the base plate and a third plate carried by the intermediate plate for movement with the intermediate plate relative to the base plate, and the third plate being movable relative to the intermediate plate in a direction parallel to the pivot axis.

14. The apparatus of claim 1, wherein each arm includes a pair of tooling assemblies spaced from each other with each tooling assembly adapted to carry a separate charge and wherein the mold cavities include pairs of radially aligned mold cavities, the arm being movable relative to the hub so that a point midway between the tooling assemblies moves in a plane during a portion of the hub rotation to facilitate aligning the charges carried by the pair of tooling assemblies with at least one pair of mold cavities.

15. The apparatus of claim 14, wherein the plane is perpendicular to a plane that includes the first axis and the second axis.

16. The apparatus of claim 15, wherein during the portion of the hub rotation wherein the point midway between the tooling assemblies moves in the plane, the point intersects the plane that includes the first axis and the second axis.

17. The apparatus of claim 14, wherein during the portion of the hub rotation the arm is movable angularly and radially relative to the hub.

18. The apparatus of claim 17, wherein the arm is also movable axially relative to the hub to facilitate releasing the charges from the tooling assemblies.

19. The apparatus of claim 18, wherein the arm includes a base plate pivotally carried by the hub, an intermediate plate carried by the base plate for radial movement relative to the base plate, and a third plate carried by the intermediate plate for axial

movement relative to the intermediate plate.

20. The apparatus of claim 19, wherein each of the base plate, intermediate plate and third plate includes at least one follower engageable with one or more cam surfaces of the cam system to control the movement of the base plate, intermediate plate and third plate relative to the hub.

21. The apparatus of claim 1, wherein the arm includes at least one tooling assembly having a stationary gripper and a movable gripper, the movable gripper being operably connected to a cam follower that is responsive to the cam system to move the movable gripper relative to the stationary gripper.

22. The apparatus of claim 21, wherein the arm includes two spaced apart tooling assemblies each including a movable gripper and a stationary gripper, each movable gripper being operably connected to the same cam follower for co-movement of the movable gripper of each tooling assembly.

23, The apparatus of claim 22, including a lateral slide carried by the arm, the cam follower being carried by the lateral slide with each movable gripper operably connected to the lateral slide.

24. The apparatus of claim 23, including a second cam follower carried by the lateral slide and responsive to the contour of a cam surface to move the lateral slide in a direction moving the movable grippers away from their associated stationary grippers.

25. The apparatus of claim 24, including a plate carried by the arm for movement parallel to the second axis, the lateral slide being carried by the plate for movement in a direction perpendicular to the second axis and the second follower being moved along its associated cam surface when the plate is moved relative to the arm.

26. The apparatus of claim 25, including at least one spring operably associated with the plate to yieldably bias the plate axially downwardly so that the plate moves downwardly under the combined forces of gravity and the spring.

27. The apparatus of claim 12, including at least one spring operably associated with the plate to yieldably bias the plate axially downwardly so that the plate moves downwardly under the combined forces of gravity and the spring.

28. The apparatus of claim 19, including at least one spring disposed between the intermediate plate and the third plate to yieldably bias the third plate axially downwardly so that the plate moves downwardly under the combined forces of gravity and the spring.

29. The apparatus of claim 12, including a latch selectively associated with the plate to maintain an axial position of the plate.

30. The apparatus of claim 19, including a latch selectively associated with the third plate to maintain an axial position of the third plate.

31. The apparatus of claim 30, wherein the latch is yieldably biased to an open position wherein the latch does not interfere with axial movement of the third plate, and is movable to a closed position to maintain the third plate in an axially raised position to prevent downward axial movement of the third plate until the latch is moved to its open position.

32. The apparatus of claim 31, including a cam follower coupled to the latch to move the latch from its open position to its closed position.

33. The apparatus of claim 21, wherein at least one of the grippers includes an arcuate inner surface that defines a portion of a cavity in which the charge is

receivable.

34. The apparatus of claim 33, wherein the movable gripper includes the arcuate inner surface.

35. The apparatus of claim 21, wherein the movable gripper and the stationary gripper define a cavity in which the charge is receivable and the movable gripper is movable relative to the stationary gripper from an open position wherein the cavity has its largest volume to a closed position wherein the cavity has its smallest volume, and in the closed position the grippers engage and retain the charge in the cavity.

36. The apparatus of claim 35, including a latch selectively associated with the movable gripper, the latch having an open position wherein it does not interfere with movement of the movable gripper and a closed position wherein the latch holds the movable gripper in its open position.

37. The apparatus of claim 36, including a reject mechanism disposed adjacent to a path of movement of the arms as the hub rotates and operable to displace charges from the grippers rather than deliver them to the mold cavities.

38. The apparatus of claim 37, wherein the reject mechanism includes a fluid nozzle that directs fluid under pressure onto the charges to displace the charges from the grippers.

39. The apparatus of claim 21, wherein each tooling assembly includes a knife disposed axially above the grippers.

40. A method of delivering a charge to a mold cavity, the method including the steps of:

providing a stream of plastic;

cutting the stream to form a charge;

carrying the charge away from the stream on an arm;

moving at least a portion of the arm about an axis to align the charge carried by the arm with the mold cavity by radially and angularly displacing the arm portion relative to the axis over a portion of the path of travel of the arm; and

moving at least a portion of the arm axially to discharge the pellet from the arm and into the mold cavity.

41. The method of claim 40, wherein the step of moving includes moving the arm so that a portion of the arm travels in a plane.

42. The method of claim 41, wherein the mold cavity is rotated about a first axis, the arm is rotated about a second axis parallel to the first axis and the plane is perpendicular to a plane including the first axis and the second axis.

43. The method of claim 41, wherein two streams of molten plastic are provided and both streams are cut to form two charges by rotating the arm through the streams.

44. The method of claim 43, wherein the mold cavity is rotated about a first axis, the arm is rotated about a second axis parallel to the first axis and the plane is perpendicular to a plane including the first axis and the second axis.

45. The method of claim 44, wherein the portion of the arm includes a point midway between the two charges.

46. The method of claim 45, wherein the point travels along the plane, and the arm is initially angularly positioned so that one end of the arm leads the other end of the arm relative to a radial line extending from the second axis to the arm, and the arm is later angularly displaced so that the one end of the arm trails the other end of the arm relative to a radial line extending from the second axis to the arm.

47. The method of claim 40, wherein the arm includes a base plate and a plate carried by and axially movable relative to the base plate, and the step of moving at least a portion of the arm axially includes moving the axially movable plate relative to the base plate.

48. The method of claim 47, including the step of providing a force yieldably biasing the axially movable plate to an axially lowered position, and the step of moving at least a portion of the arm axially includes moving the axially movable plate under the biasing force and the force of gravity.

49. Apparatus for transferring a charge to a mold cavity, including:

a hub rotated about an axis,

at least one arm extending generally radially from the hub to rotate with the hub around the axis, and

a cam system operably coupled to the arm for moving the arm along a path with respect to the axis as the hub and the arm rotate around the axis, at least a portion of the arm traveling along a plane that is parallel to the axis during a portion of the path.

50. The apparatus of claim 49, wherein the cam system includes a cam arrangement for moving the arm radially inwardly and outwardly with respect to the axis as a function of rotation around the axis.

51. The apparatus of claim 49, wherein the cam system includes a cam arrangement for moving the arm angularly with respect to the hub as a function of rotation of the hub and the arm around the axis.

52. The apparatus of claim 49, wherein the cam system includes a cam arrangement for moving the arm axially parallel to the axis as a function of rotation around the

axis.

53. The apparatus of claim 49, wherein the cam system includes a cam arrangement for moving the arm radially inwardly and outwardly with respect to the axis as a function of rotation around the axis, and for moving the arm angularly with respect to the hub as a function of rotation of the hub and said arm around the axis.

54. The apparatus of claim 49, wherein the cam system includes a cam arrangement for moving the arm radially inwardly and outwardly with respect to the axis as a function of rotation around the axis and for moving the arm axially parallel to the axis as a function of rotation around the axis.

55. The apparatus of claim 49, wherein the cam system includes a cam arrangement for moving the arm angularly with respect to said hub as a function of rotation of the hub and the arm around the axis and for moving the arm axially parallel to the axis as a function of rotation around the axis.

56. The apparatus of claim 49, wherein the cam system includes a cam arrangement for moving the arm radially, axially and angularly with respect to the axis as a function of rotation around the axis.

57. The apparatus of claim 49, wherein the arm includes a pivot shaft carried by the hub and defining a pivot axis about which the arm is pivoted, the pivot axis being parallel to the axis.

58. The apparatus of claim 57, wherein the arm includes a base plate that is operably connected to the pivot shaft.

59. The apparatus of claim 58, wherein the arm includes a slide plate carried by the base plate for movement along the base plate generally radially with respect to the

axis, the slide plate being responsive to the contour of a cam surface of the cam system to drive the slide plate relative to the base plate.

60. The apparatus of claim 58, wherein the arm includes a plate carried by the base plate for movement along the base plate generally axially with respect to said axis, the plate being responsive to the contour of a cam surface of the cam system to control movement of the plate relative to the base plate.

61. The apparatus of claim 58, wherein the arm includes an intermediate plate carried by the base plate for radial movement relative to the base plate and a third plate carried by the intermediate plate for movement with the intermediate plate relative to the base plate, and the third plate being movable relative to the intermediate plate in a direction parallel to the pivot axis.

62. The apparatus of claim 49, wherein each arm includes a pair of tooling assemblies spaced from each other with each tooling assembly adapted to carry a separate charge, the arm being movable relative to the hub so that a point midway between the tooling assemblies moves in a plane during a portion of the hub rotation to facilitate aligning the charges carried by the pair of tooling assemblies with a pair of mold cavities.

63. The apparatus of claim 62, wherein a plurality of mold cavities are carried by a molding machine rotatable about an axis parallel to the axis of the hub, and the plane is perpendicular to a plane that includes the axis of the hub and the axis of the molding machine.

64. The apparatus of claim 63, wherein during the portion of the hub rotation wherein the point midway between the tooling assemblies moves in the plane the point intersects the plane that includes the axis of the hub and the axis of the molding machine.

65. The apparatus of claim 62, wherein during the portion of hub rotation the arm is movable angularly and radially relative to the hub.

66. The apparatus of claim 65, wherein the arm is movable axially relative to the hub to facilitate releasing the charges from the tooling assemblies.

67. The apparatus of claim 66, wherein the arm includes a base plate pivotally carried by the hub, an intermediate plate carried by the base plate for radial movement relative to the base plate, and a third plate carried by the intermediate plate for axial movement relative to the intermediate plate.

68. The apparatus of claim 67, wherein each of the base plate, intermediate plate and third plate includes at least one follower engageable with a cam surface of the cam system to control the movement of the base plate, intermediate plate and third plate relative to the hub.

69. The apparatus of claim 49, wherein the arm includes at least one tooling assembly having a stationary gripper and a movable gripper, the movable gripper being operably connected to a cam follower that is responsive to the contour of a cam surface of the cam system to move the movable gripper relative to the stationary gripper.

70. The apparatus of claim 69, wherein the arm includes two spaced apart tooling assemblies each including a movable gripper and a stationary gripper, each moveable gripper being operably connected to the same cam follower for co-movement of the movable gripper of each tooling assembly.

71. The apparatus of claim 60, including at least one spring operably associated with the plate to yieldably bias the plate axially downwardly so that the plate moves

downwardly under the combined forces of gravity and the spring.

72. The apparatus of claim 67, including at least one spring disposed between the intermediate plate and the third plate to yieldably bias the third plate axially downwardly so that the plate moves downwardly under the combined forces of gravity and the spring.

73. The apparatus of claim 67, including a latch selectively associated with the third plate to maintain an axial position of the third plate.

74. The apparatus of claim 73, wherein the latch is yieldably biased to an open position wherein the latch does not interfere with axial movement of the third plate, and is movable to a closed position to maintain the third plate in an axially raised position to prevent downward axial movement of the third plate until the latch is moved to its open position.

75. The apparatus of claim 74, including a cam follower coupled to the latch to move the latch from its open position to its closed position.

76. A method of delivering a charge to a mold cavity, the method including the steps of:

providing a stream of plastic;

cutting the stream to form a charge;

carrying the charge away from the stream on an arm;

moving at least a portion of the arm about an axis to align the charge carried by the arm with the mold cavity by radially and angularly displacing the arm portion relative to the axis over a portion of a path of travel of the arm.

77. The method of claim 76, wherein during the portion of the path of travel of the arm, the arm is initially angularly positioned so that one end of the arm leads the

other end of the arm relative to a radial line extending from the axis to the arm, and the arm is later angularly displaced so that the one end of the arm trails the other end of the arm relative to a radial line extending from the axis to the arm.

78. Apparatus for delivering mold charges, including:

a hub rotatable around an axis,

at least one arm extending generally radially from the hub to rotate with the hub around the axis, and

a cam system operatively associated with the arm for moving the arm in a predetermined direction with respect to the axis as the hub and the arm rotate around the axis.

79. The apparatus of claim 78, wherein the cam system moves the arm radially relative to the axis.

80. The apparatus of claim 78, wherein the cam system moves the arm angularly relative to the hub.

81. The apparatus of claim 78, wherein the cam system moves the arm axially relative to the axis.

82. The apparatus of claim 78, wherein the cam system moves the arm radially and axially relative to the axis.

83. The apparatus of claim 78, wherein the cam system moves the arm angularly relative to the hub and axially relative to the axis.

84. The apparatus of claim 78, wherein the cam system moves the arm radially relative to the axis and angularly relative to the hub.

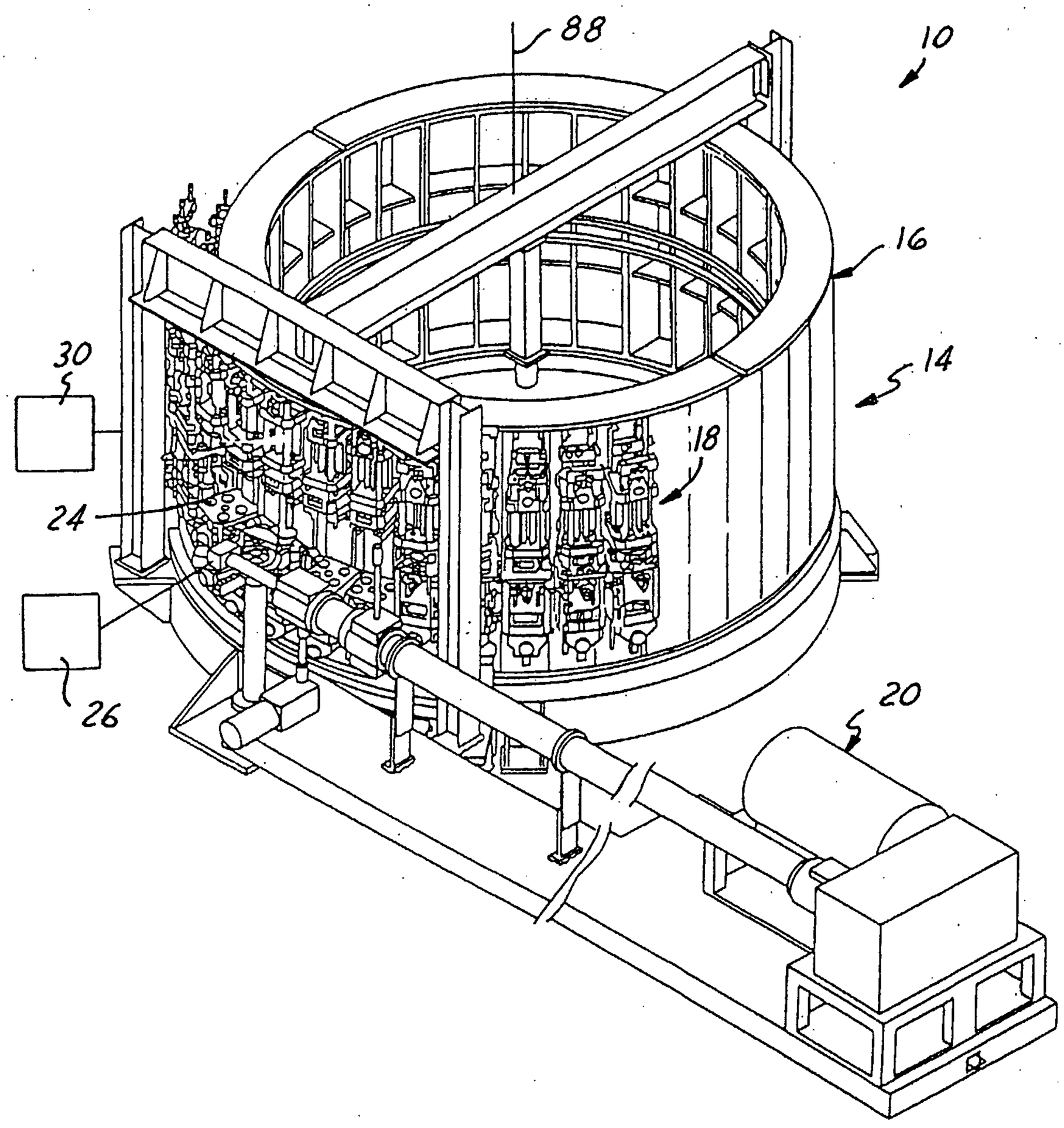

FIG. 1

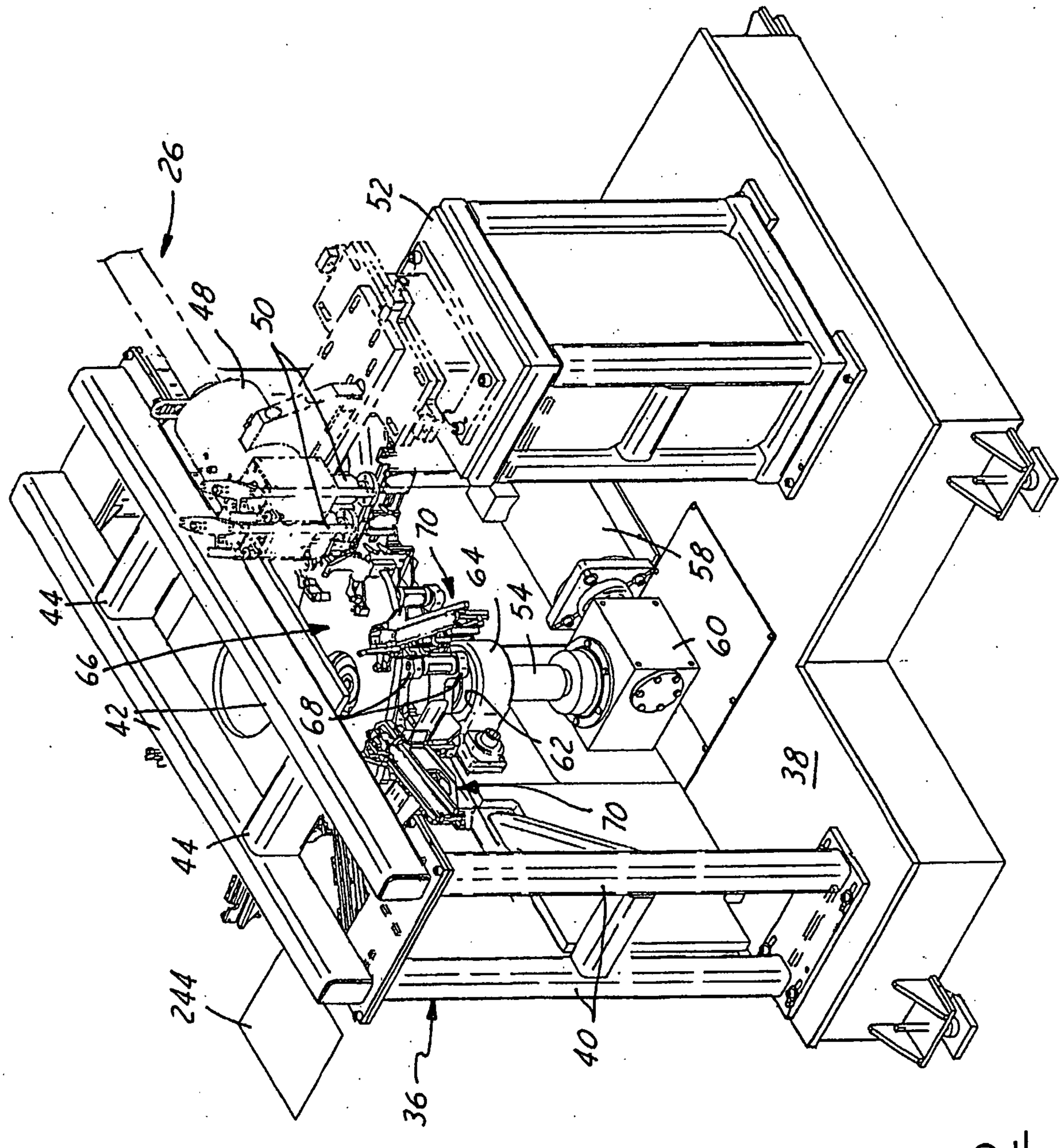

FIG.2

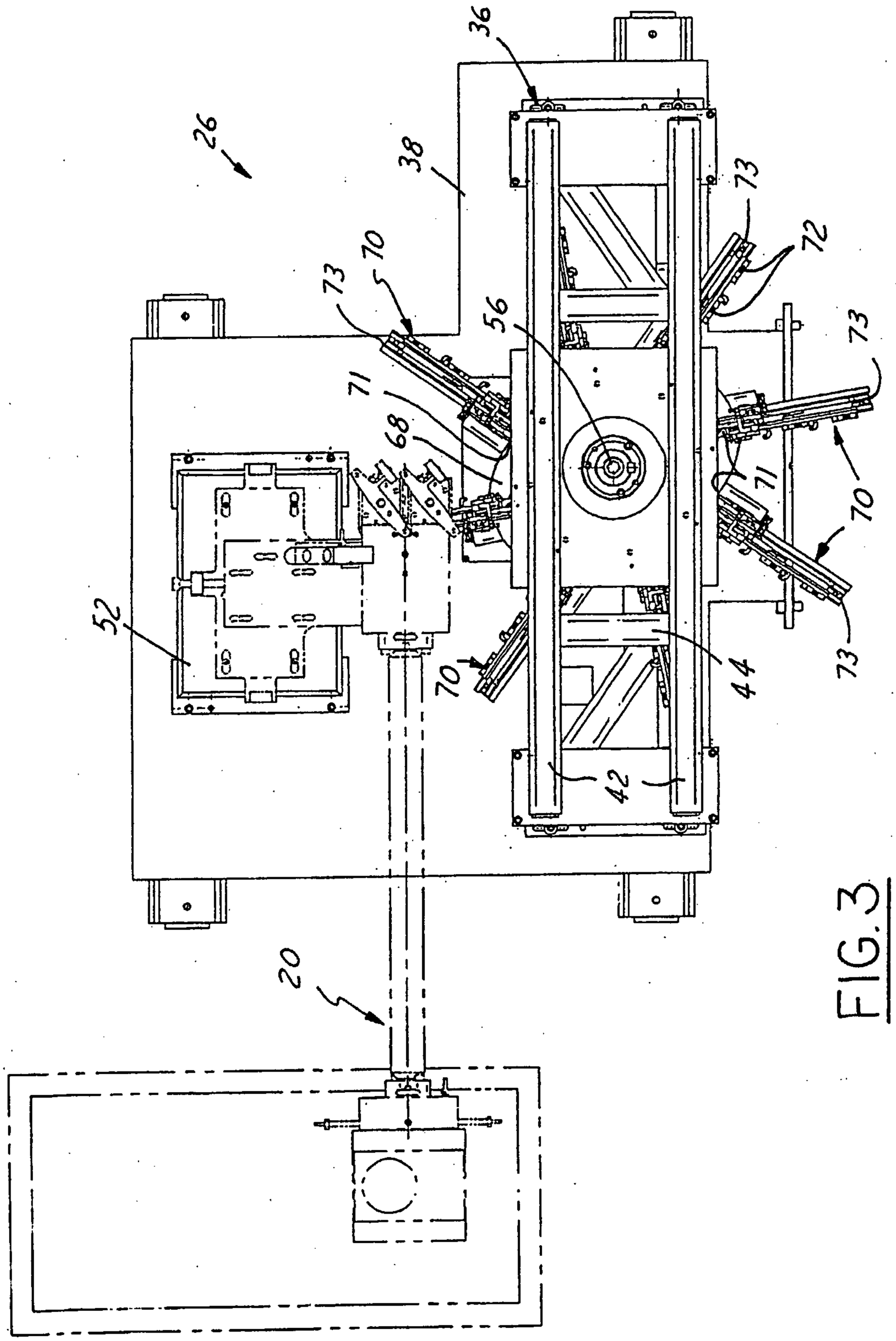

FIG.3

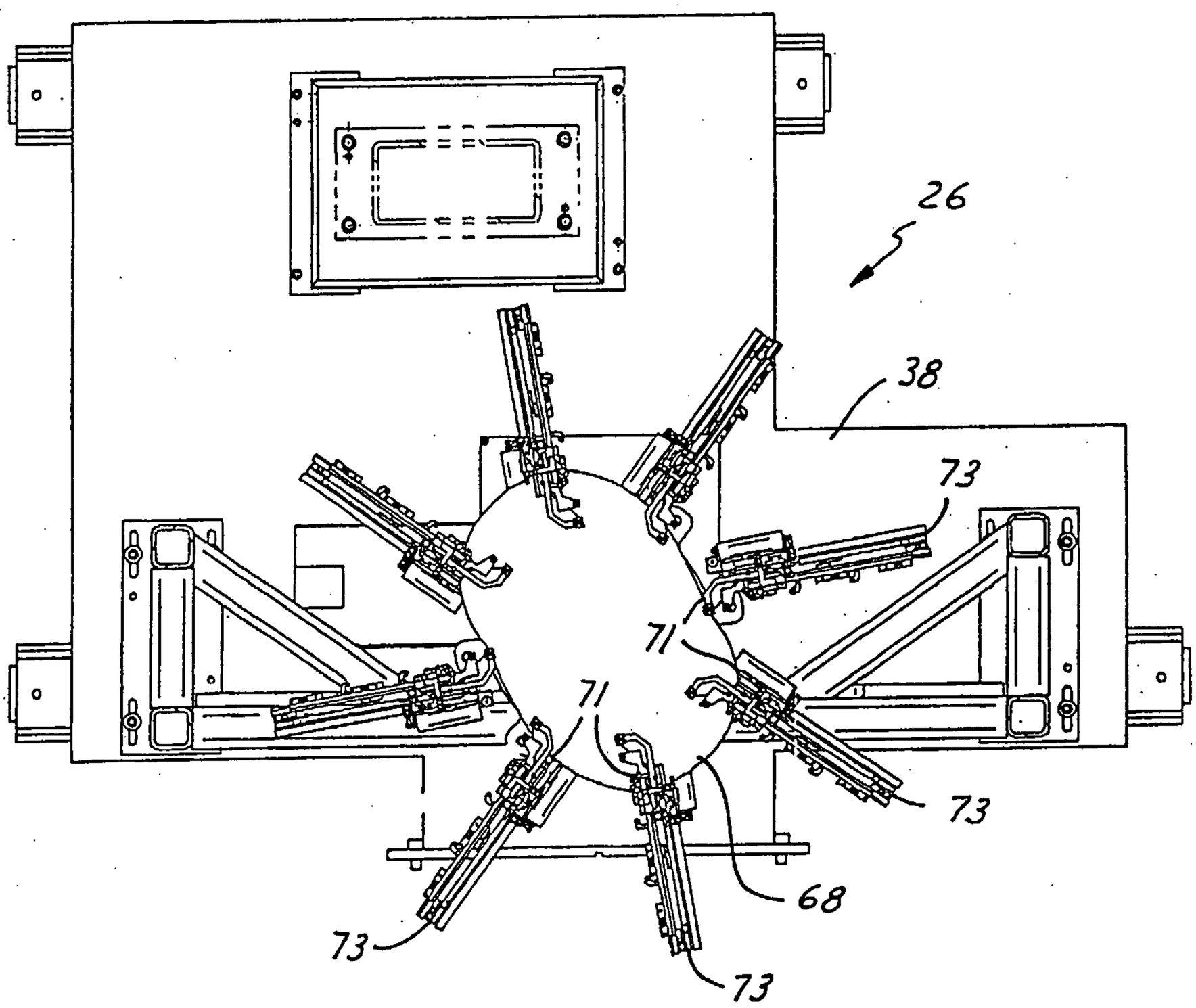

FIG. 4

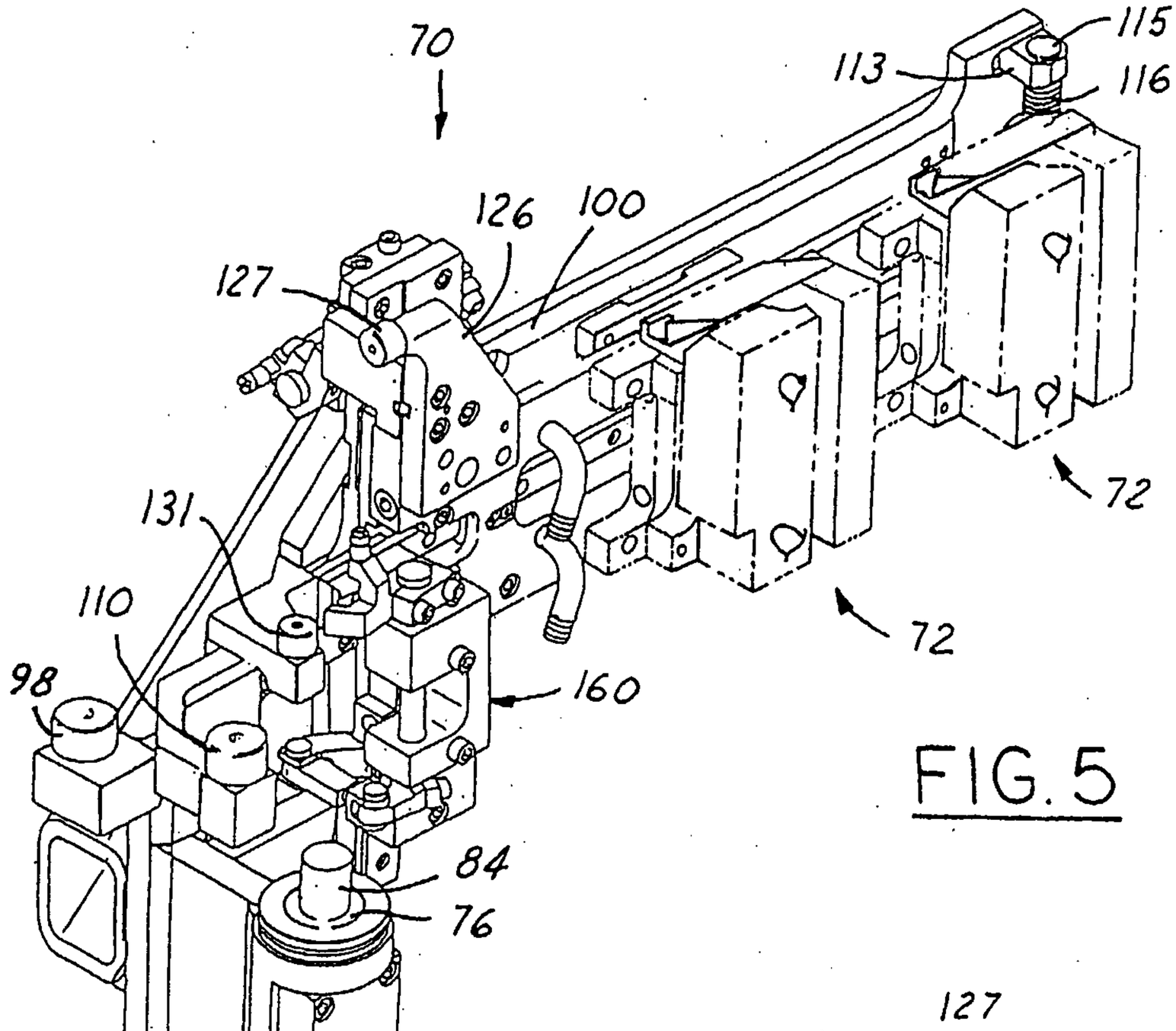
70
115
113
116
126
100
127
131
110
98
160
72
72
84
76
80
82
84
86

FIG. 5

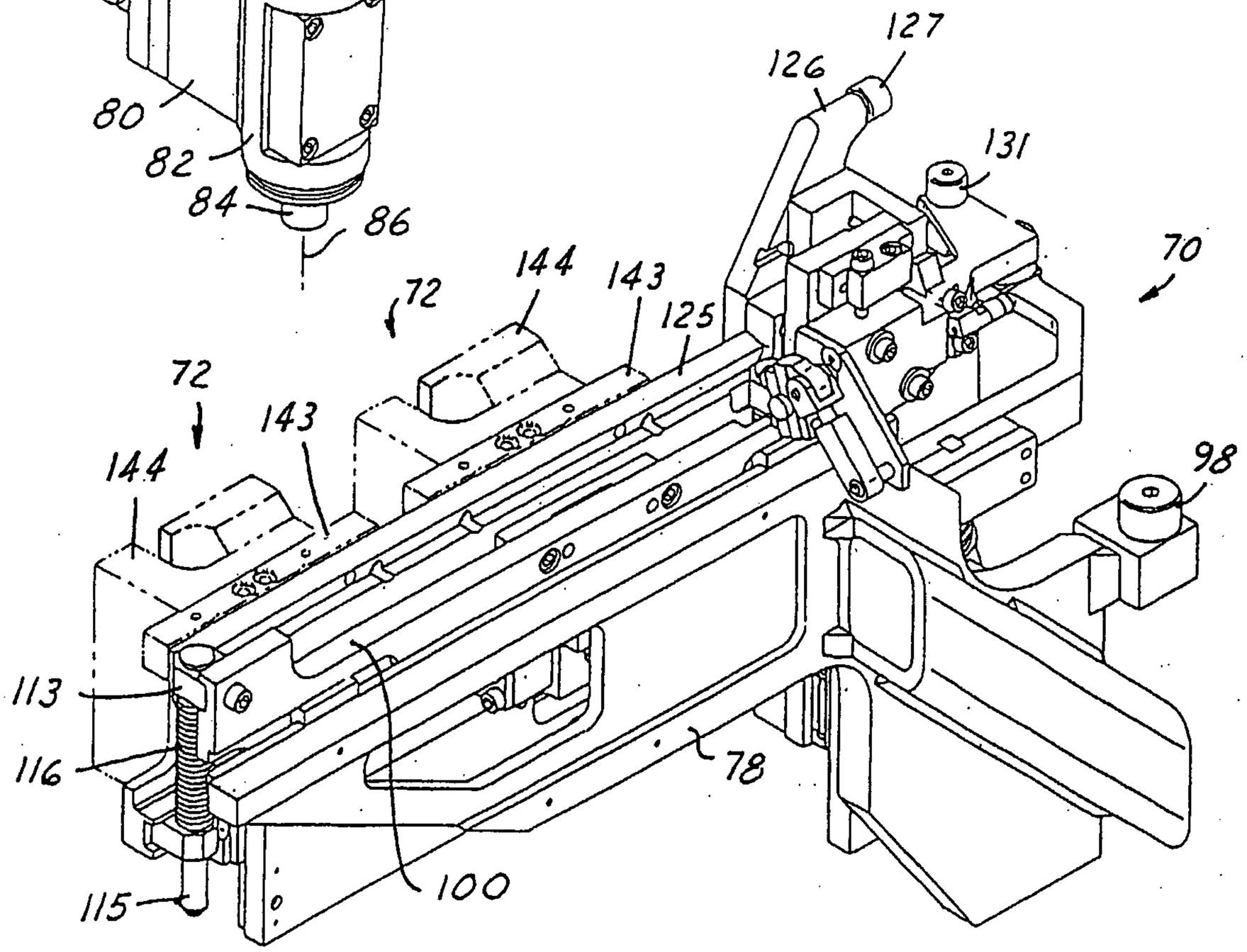
127
126
131
70
144
143
125
72
72
144
143
98
113
116
78
115
100

FIG. 6

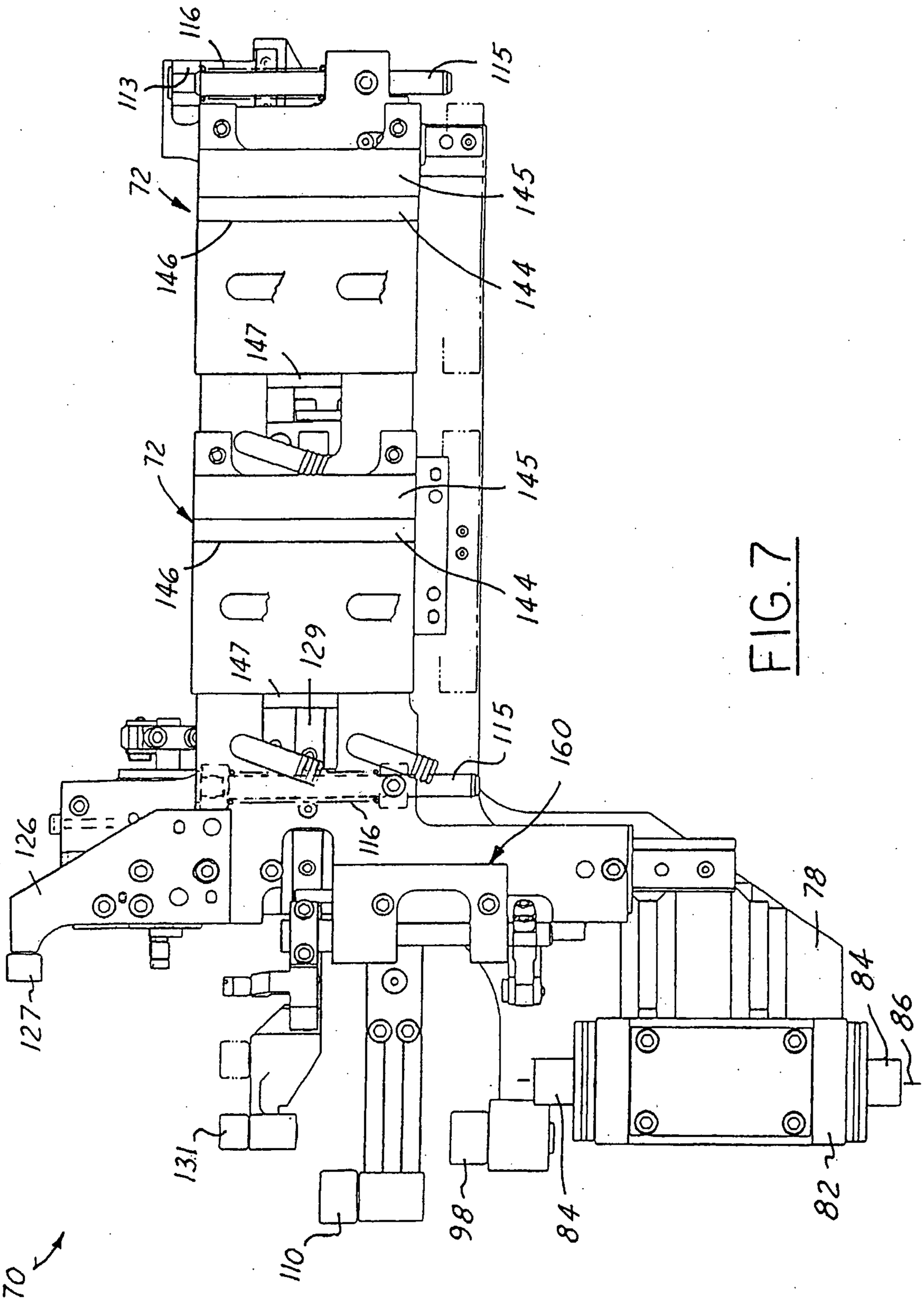
116
113
115
72
145
146
144
147
129
160
126
78
84
86
127
131
110
98
82
70

FIG. 7

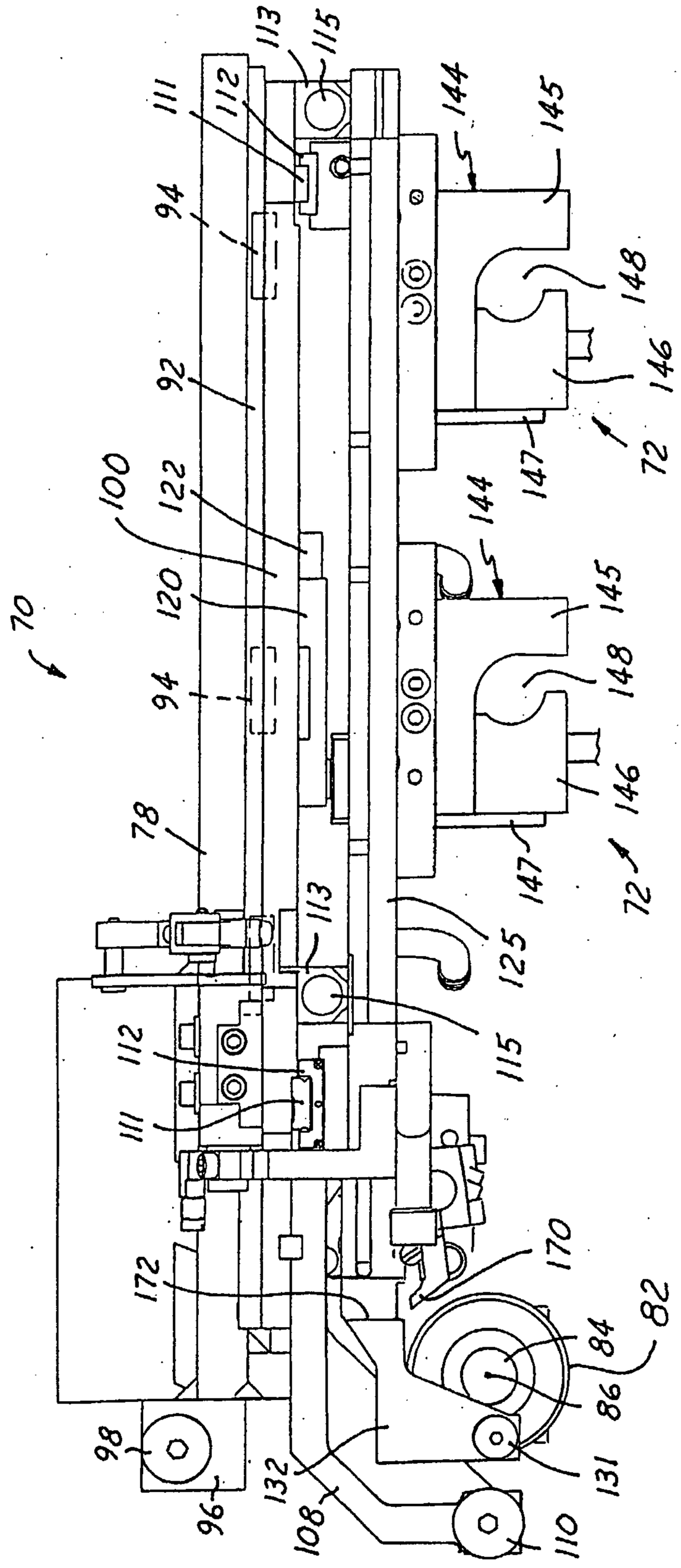
70
78
94
92
100
122
120
94
111
112
113
115
144
145
148
146
147
72
144
145
148
146
147
72
125
115
113
112
111
172
170
82
84
86
131
110
108
132
96
98

FIG.8

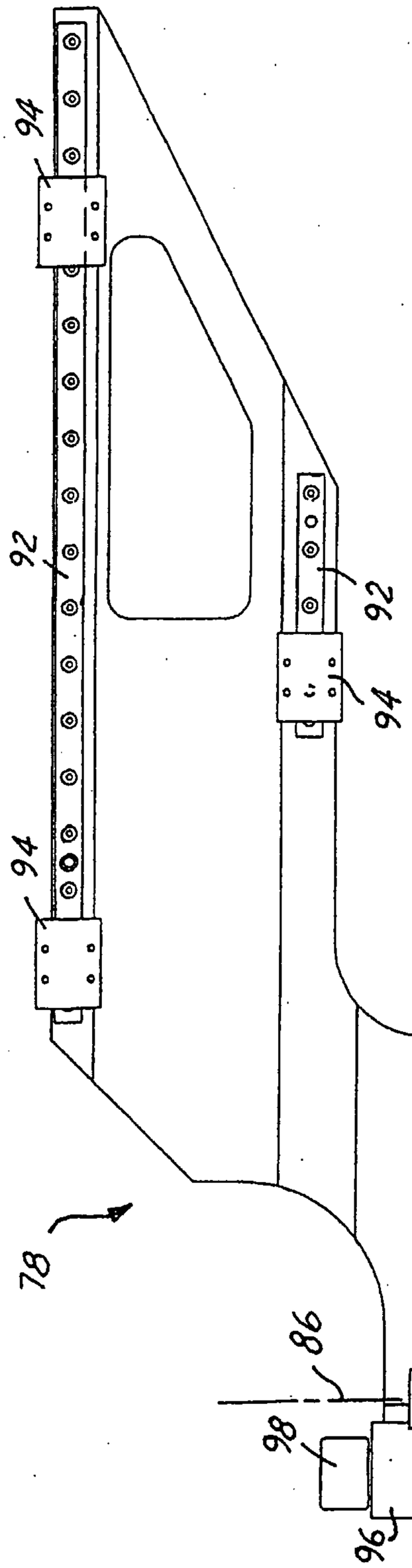
94
92
92
94
94
78
82
84
86
84
98
96
99

FIG.9

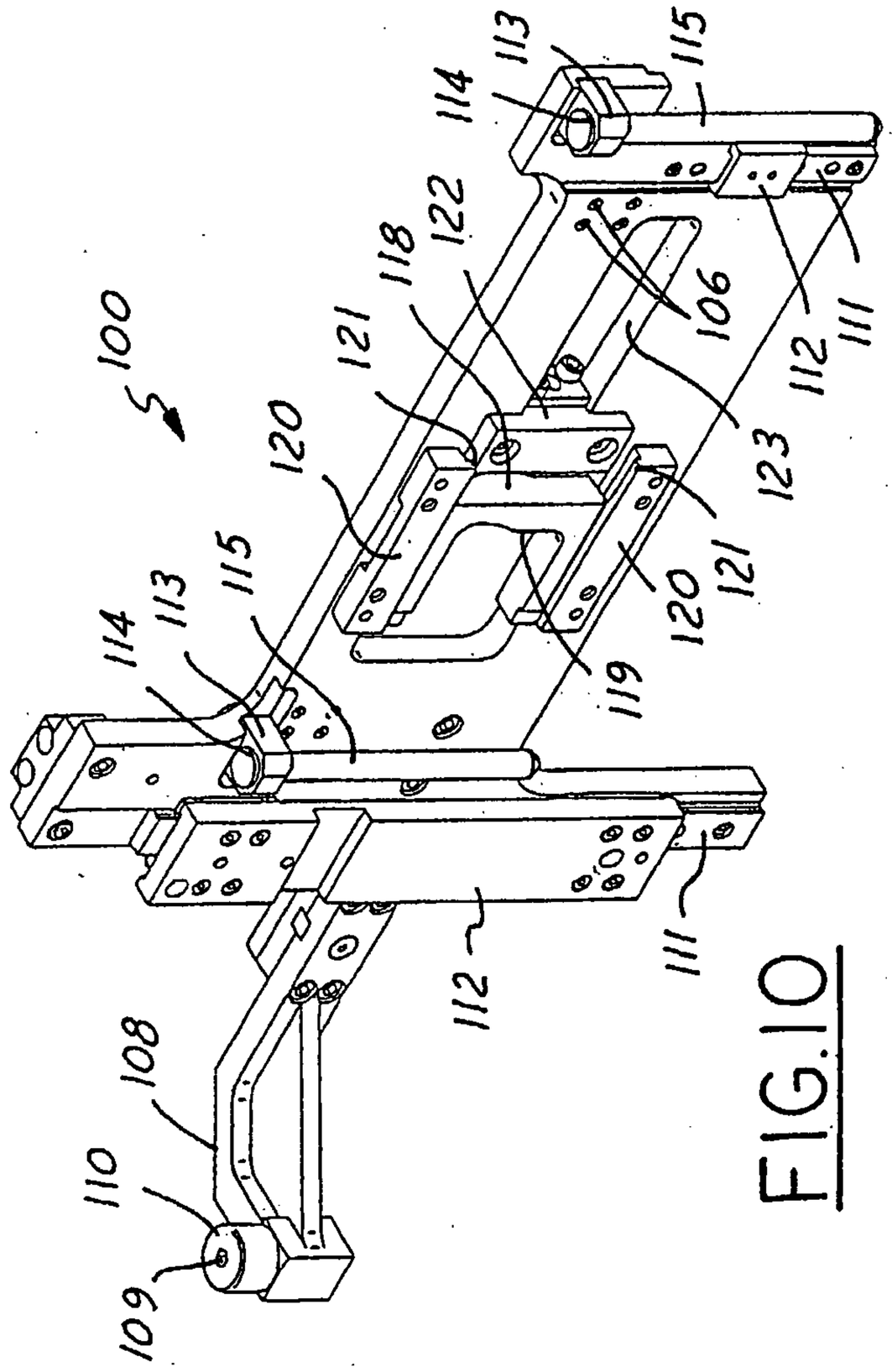
100
113
115
114
122
118
121
106
112
111
120
123
121
120
119
113
115
114
112
111
108
110
109

FIG.10

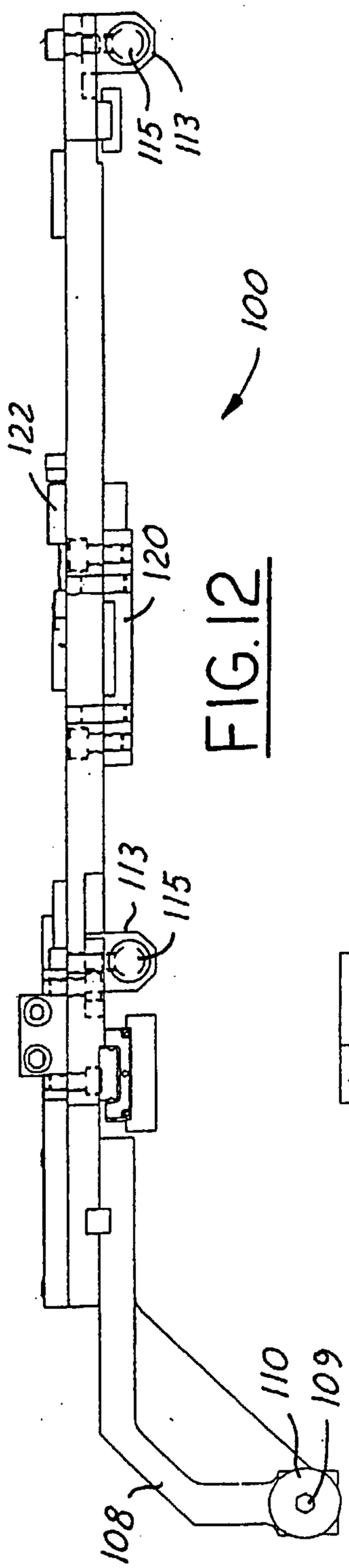
115
113
122
120
100
113
115
108
110
109

FIG. 12

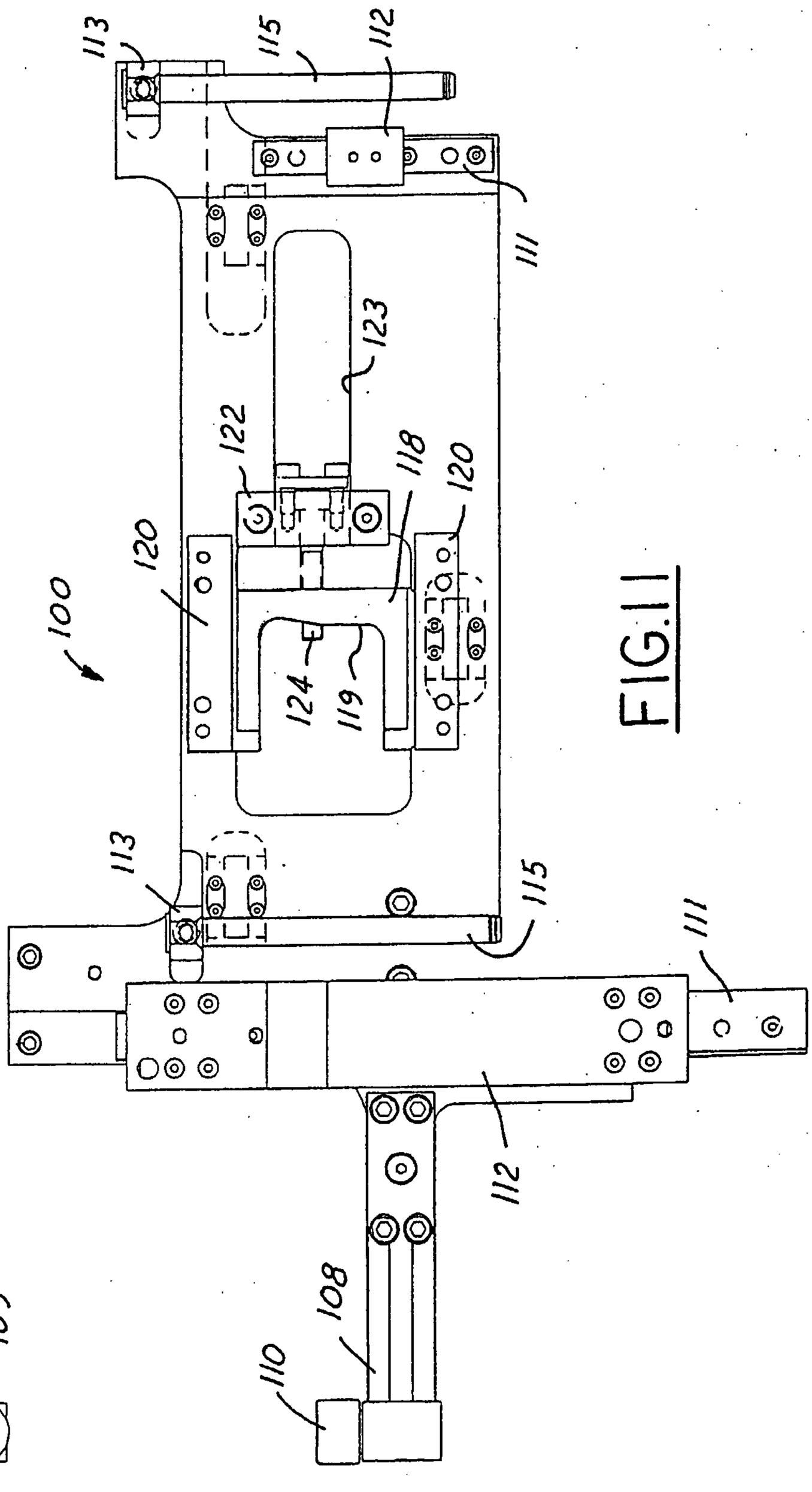
113
115
112
111
123
122
118
120
120
100
124
119
113
115
111
112
108
110

FIG. 11

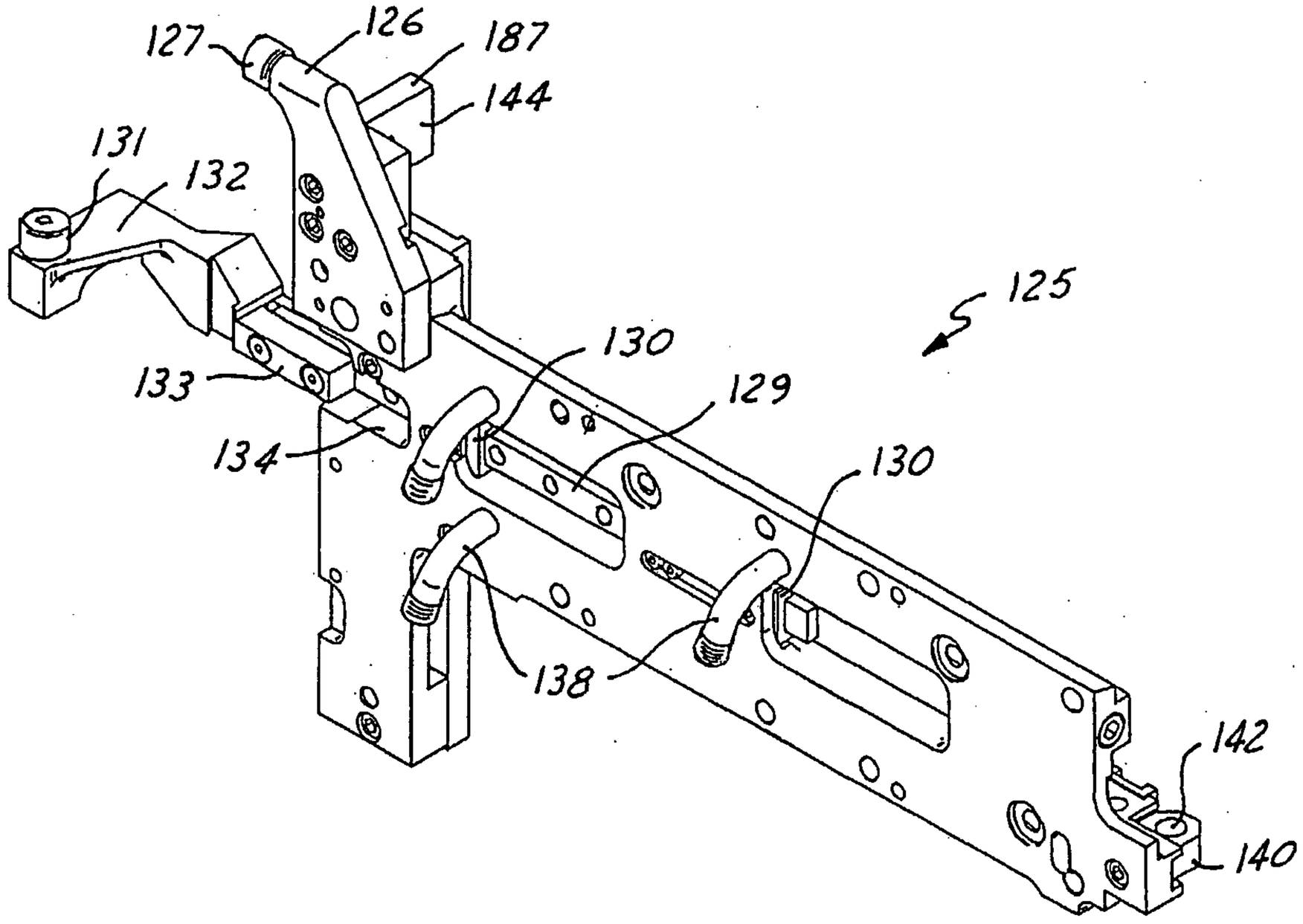

FIG.13

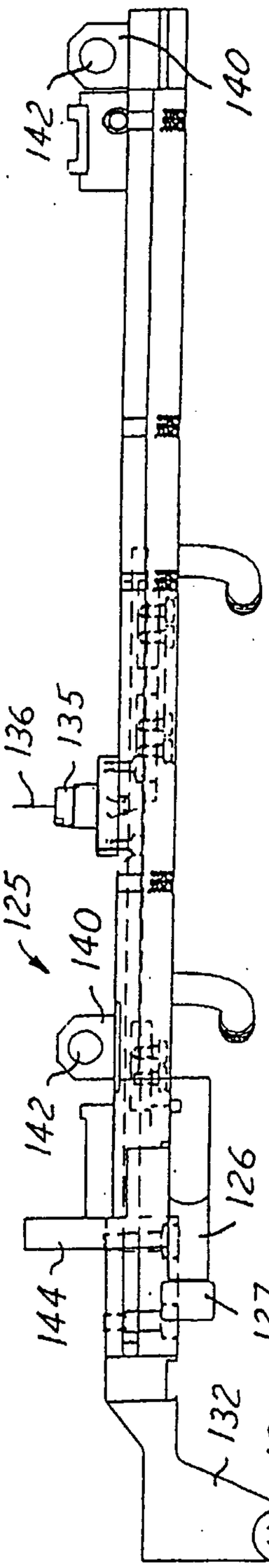

FIG.15

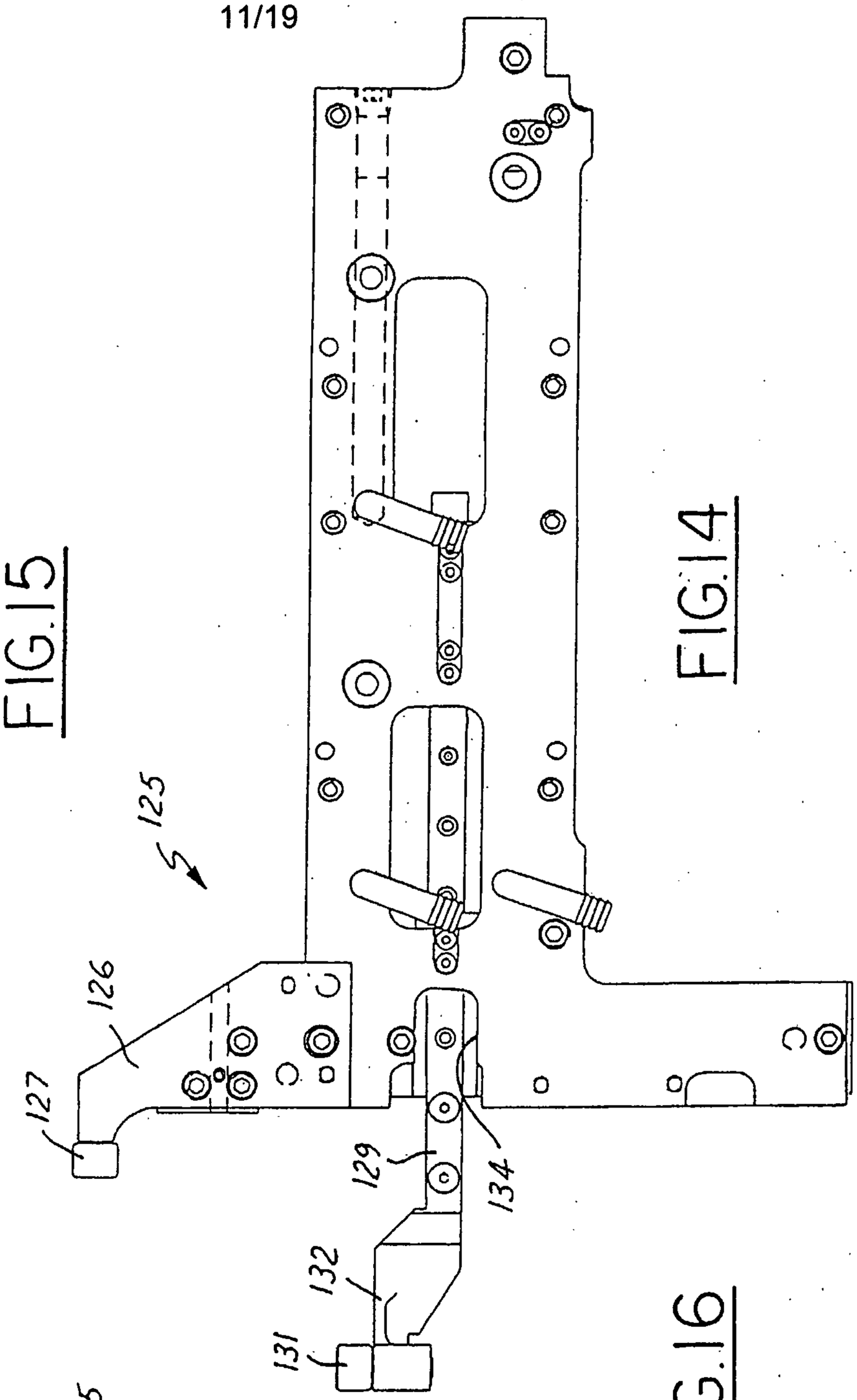

FIG.14

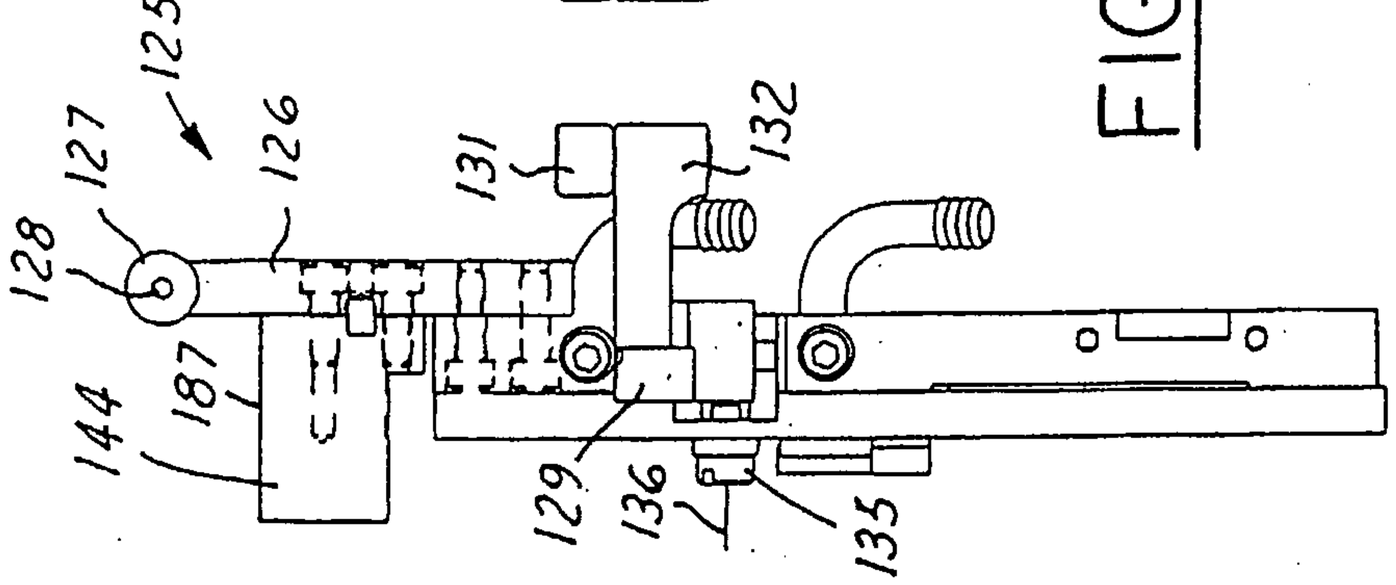

FIG.16

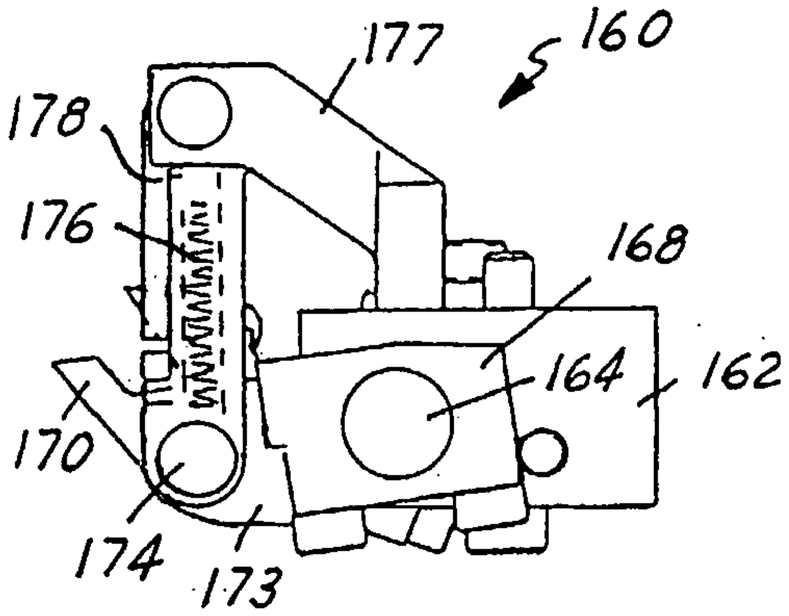

FIG.19

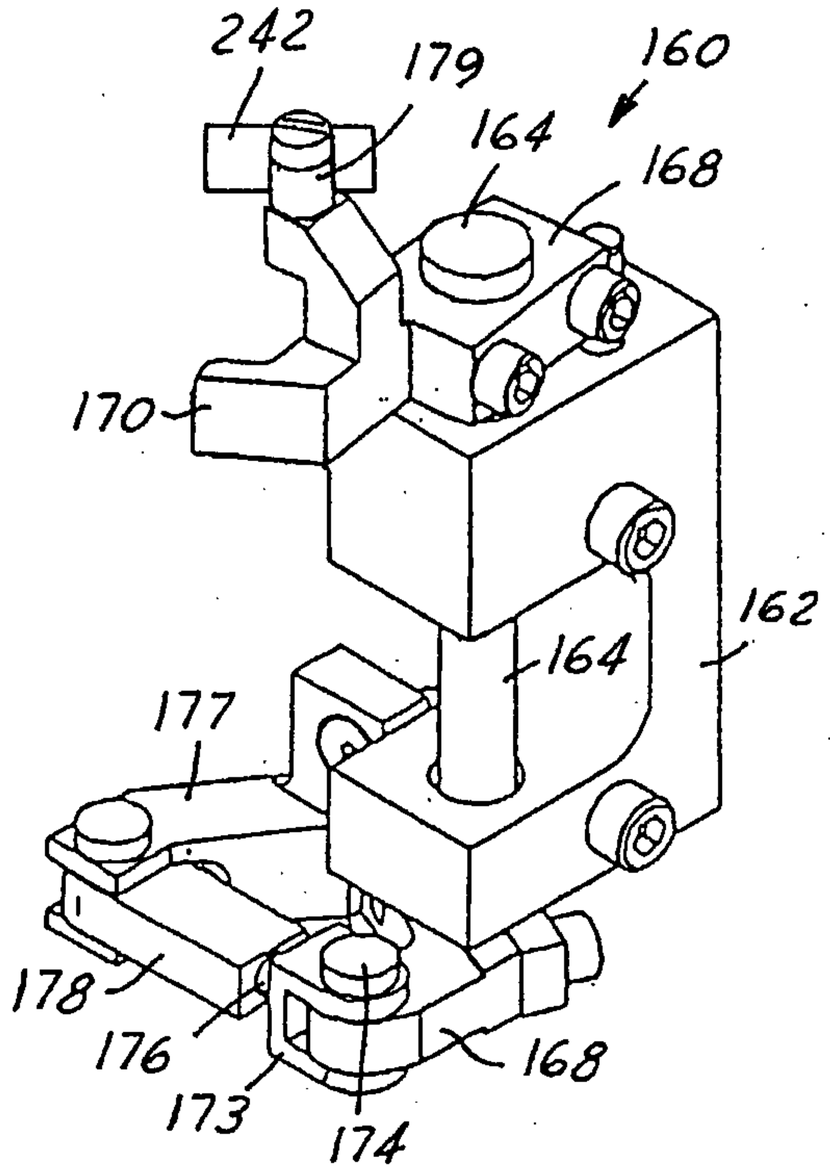

FIG.17

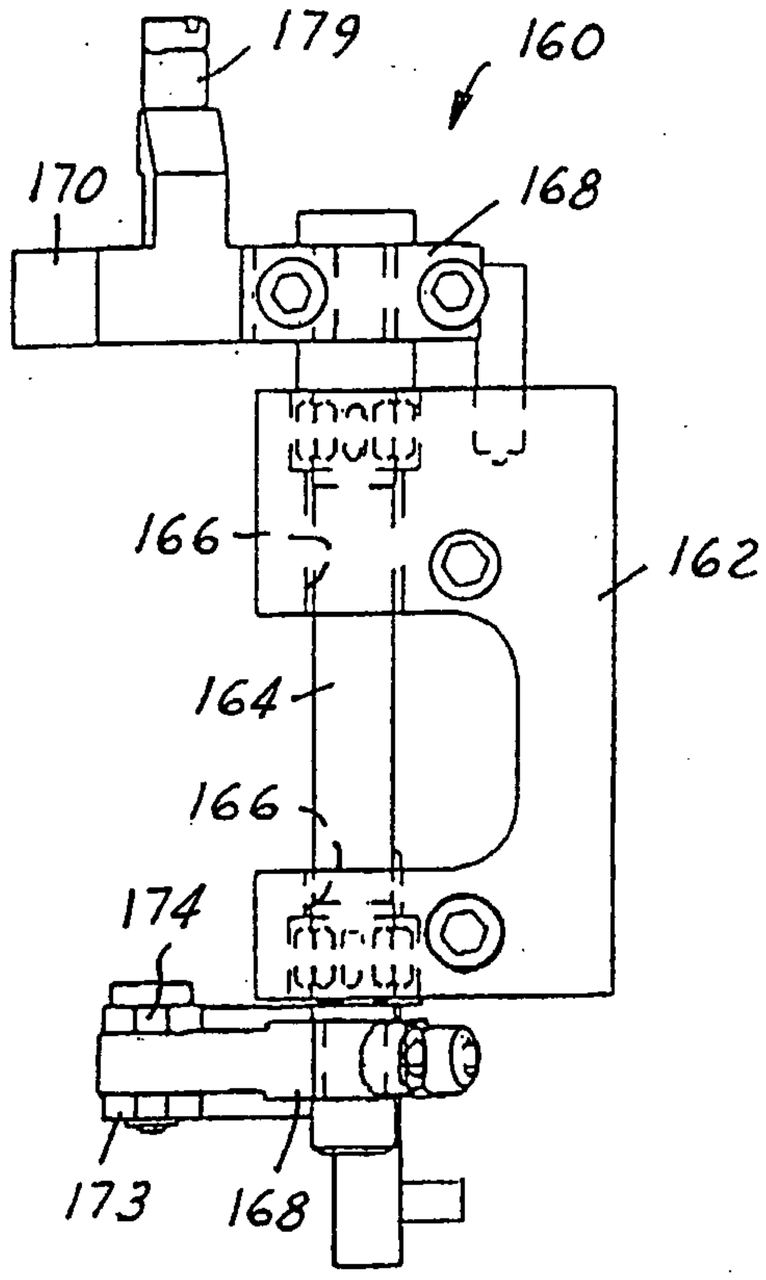

FIG.18

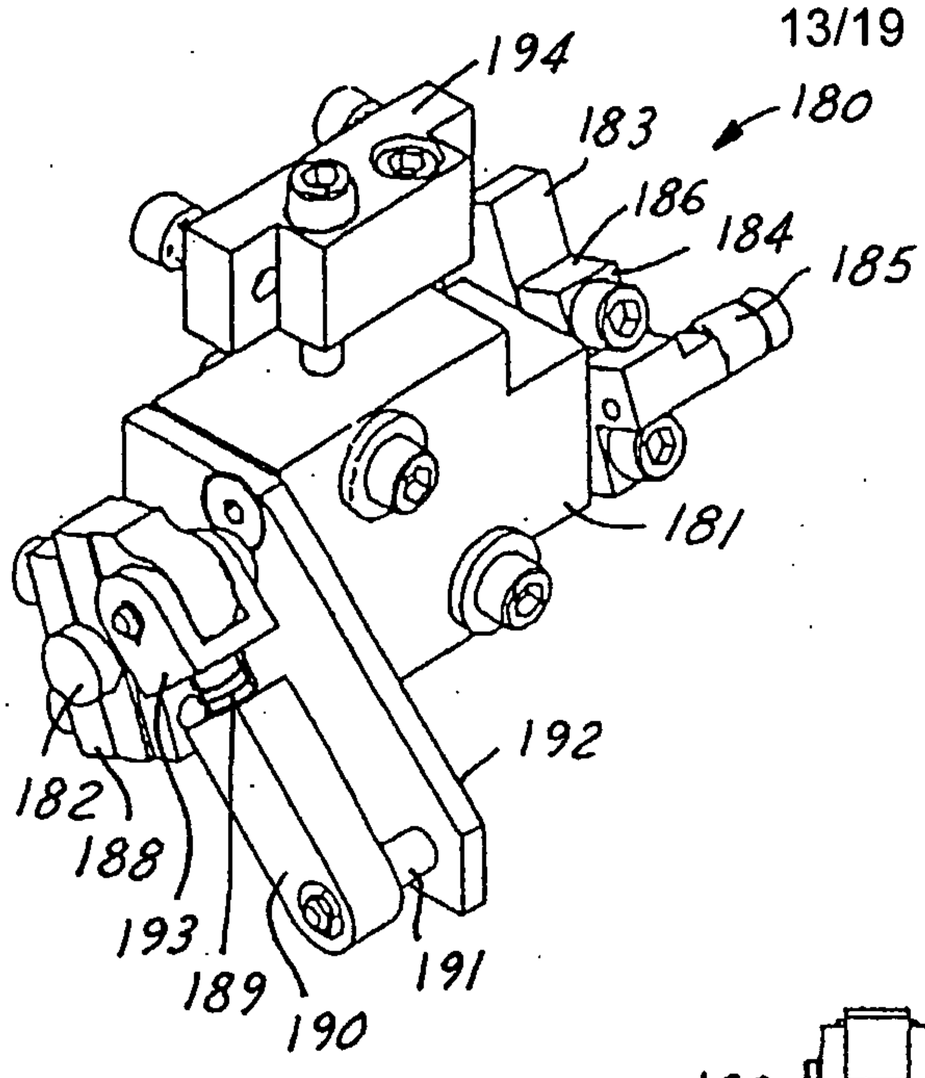

FIG. 20

FIG. 21

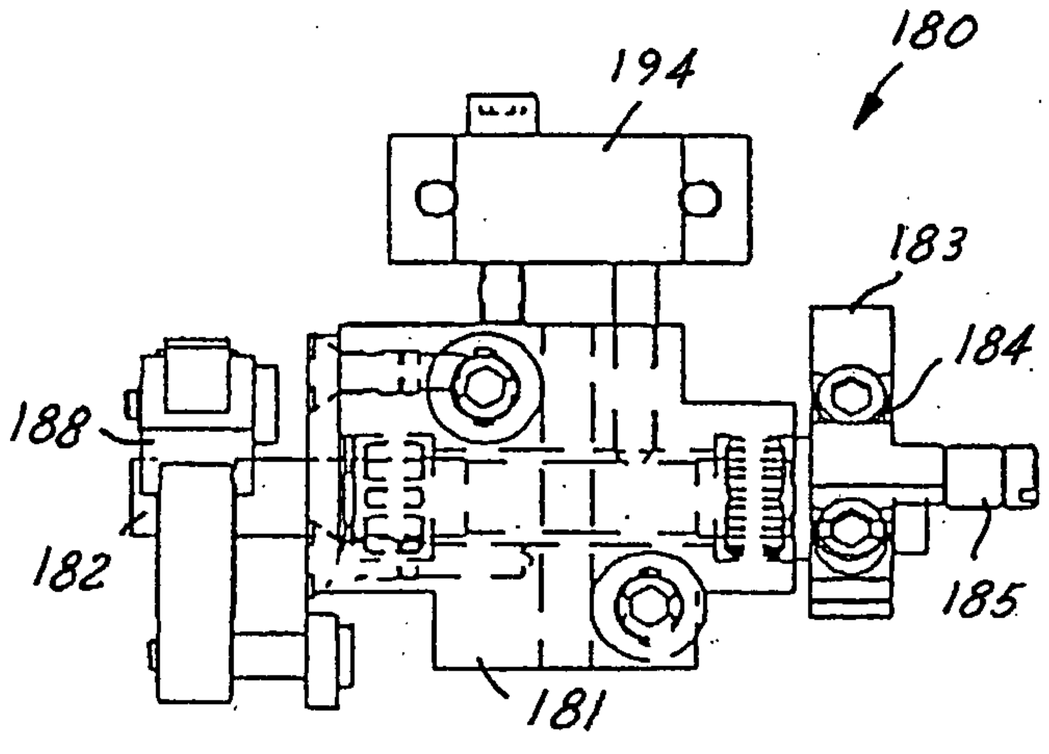

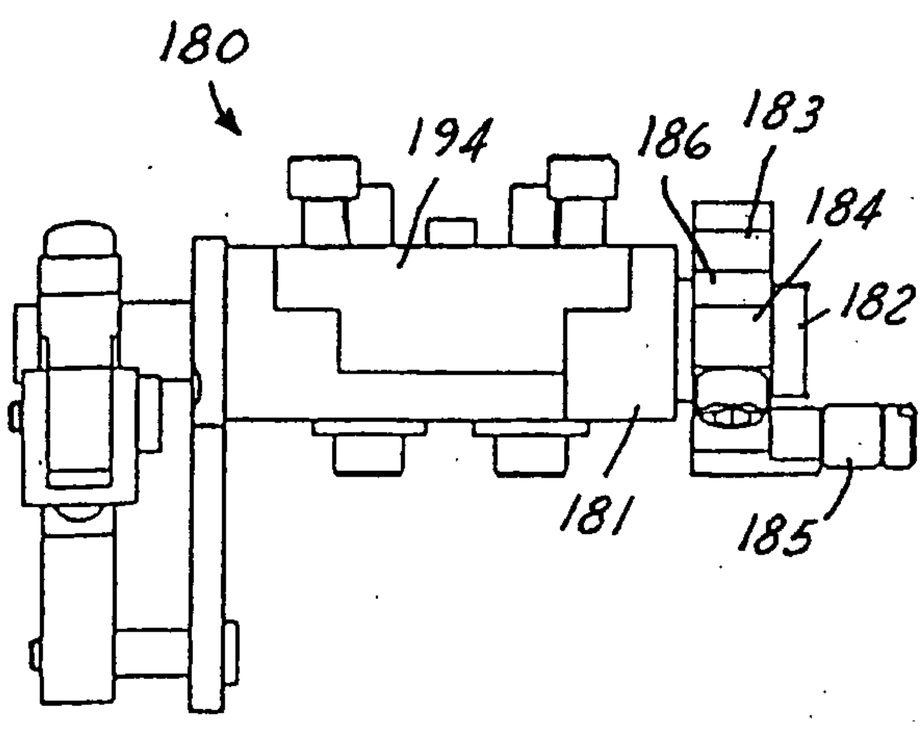

FIG. 22

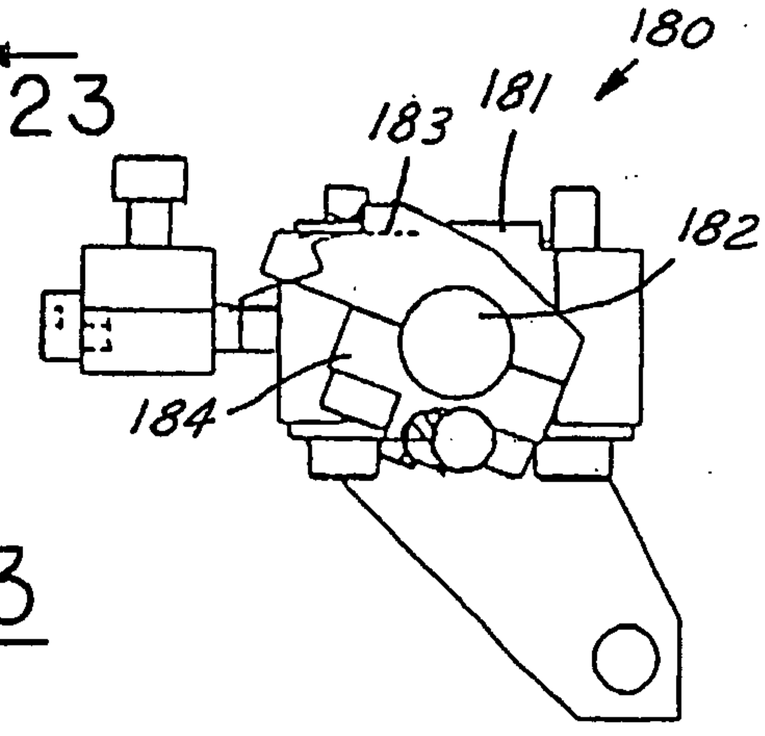

FIG. 23

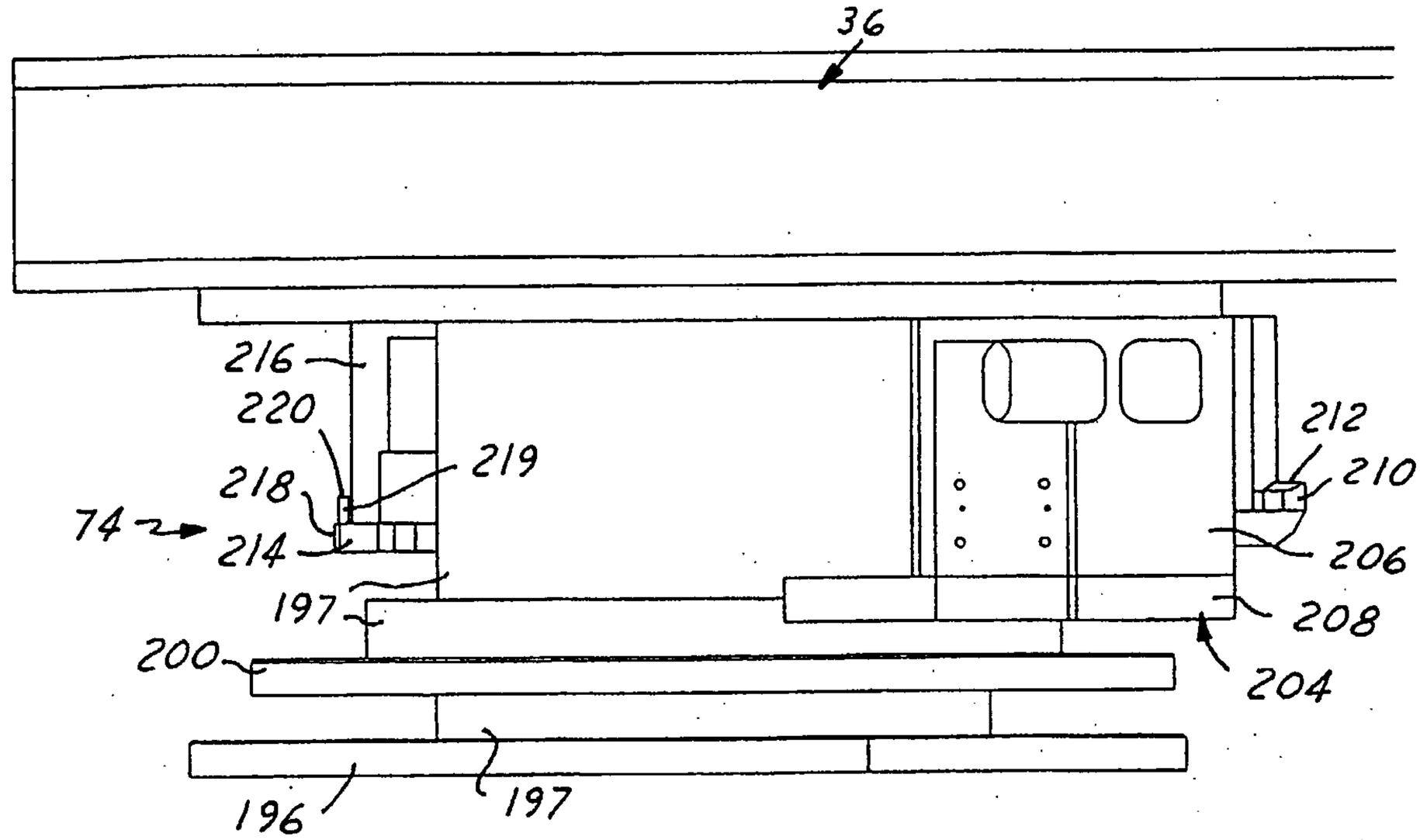
36
216
220
219
218
74
214
212
210
206
197
208
200
204
196
197

FIG. 25

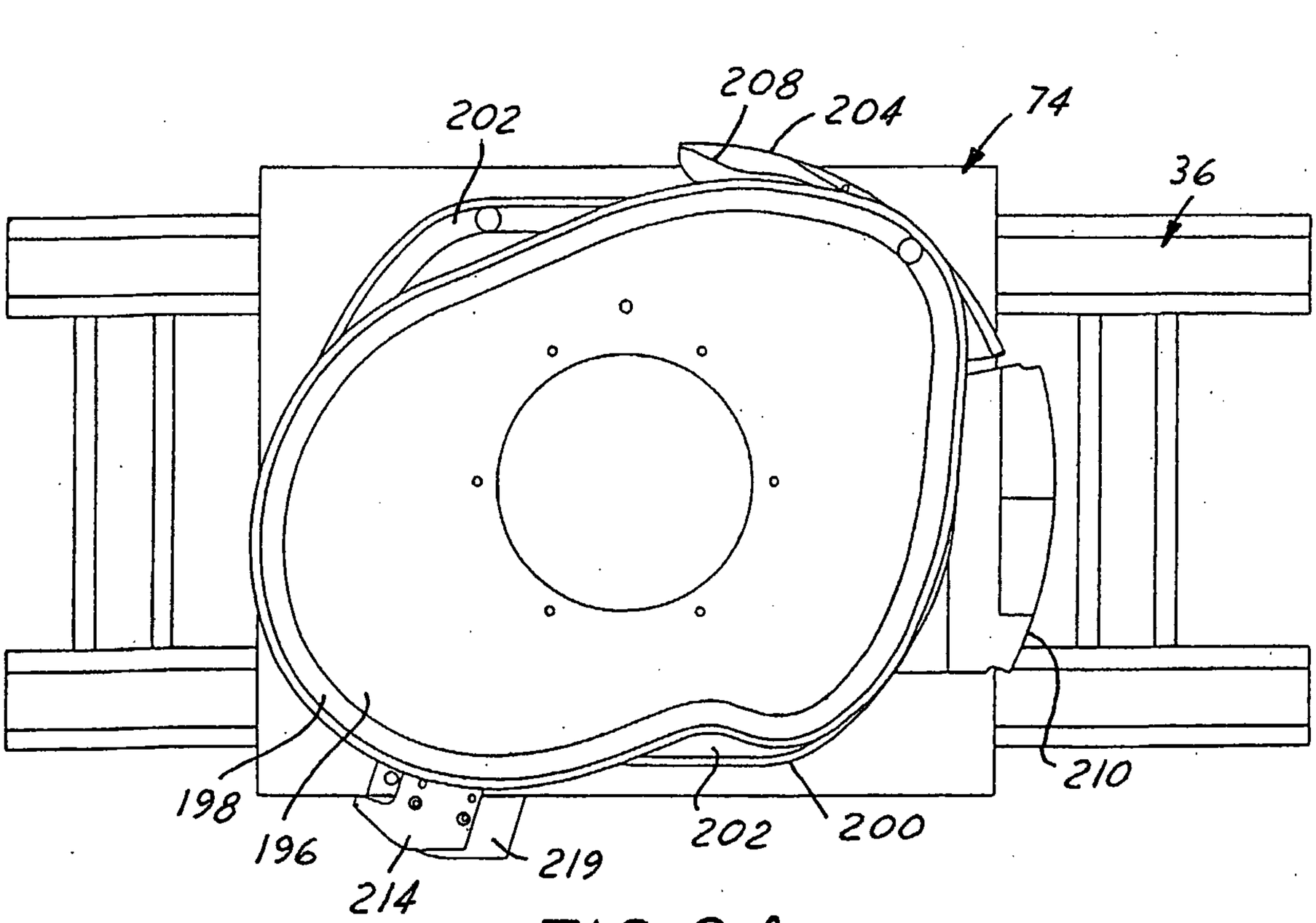
202
208
204
74
36
198
196
214
219
202
200
210

FIG. 24

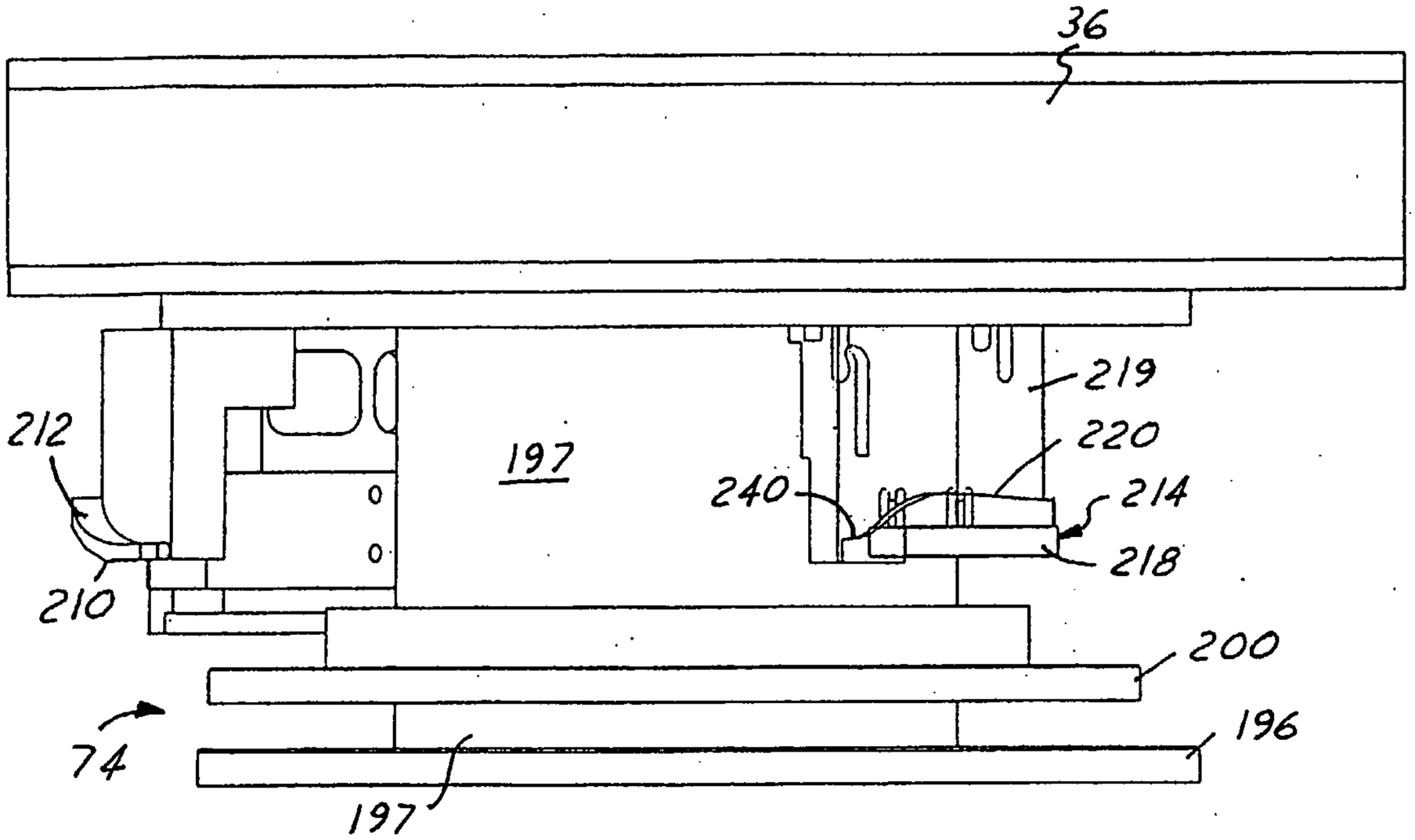
36
212
197
219
220
240
214
218
210
200
74
196
197

FIG. 26

36
210
212
219
197
204
200
197
196

FIG. 27

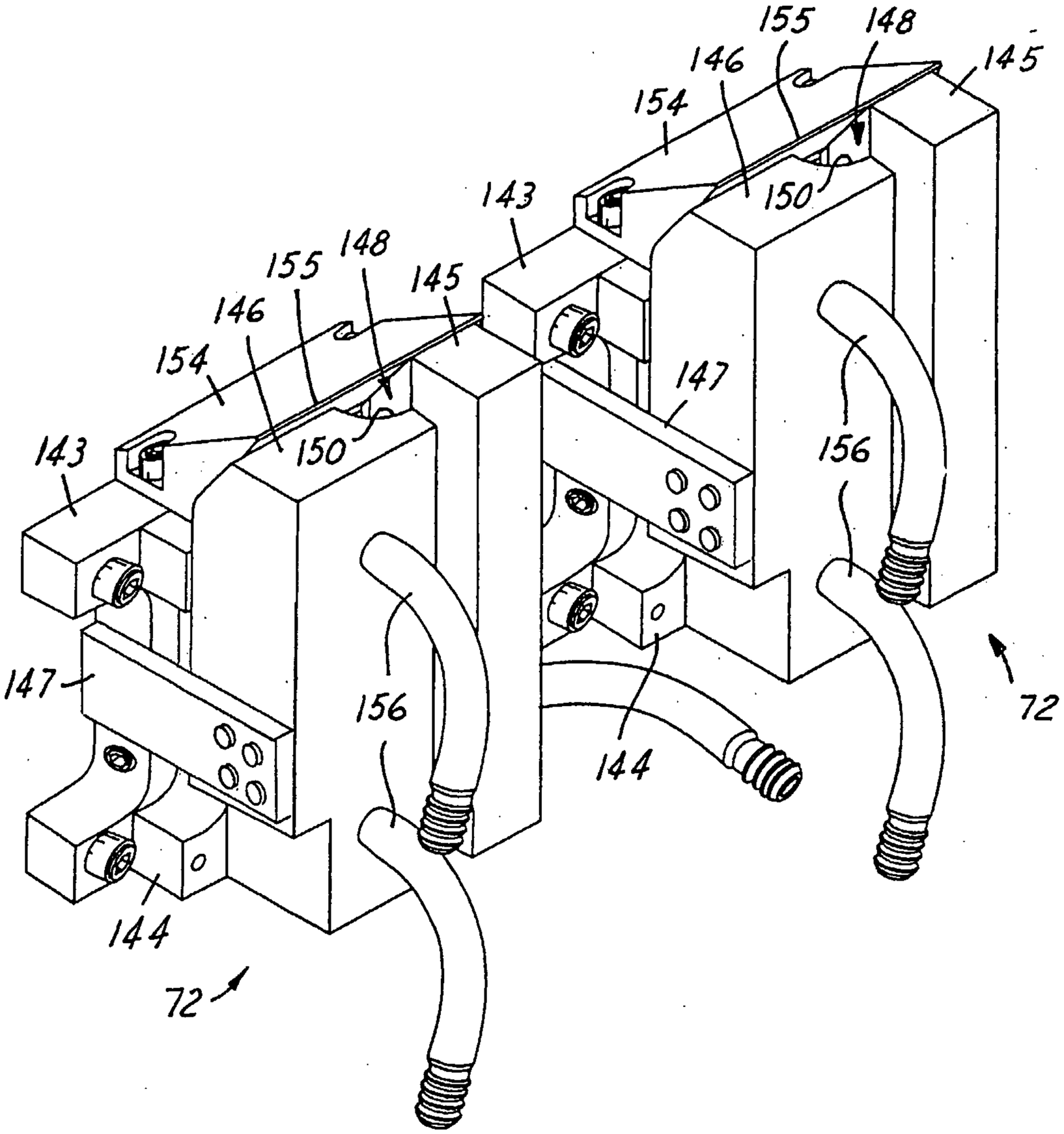

FIG. 28

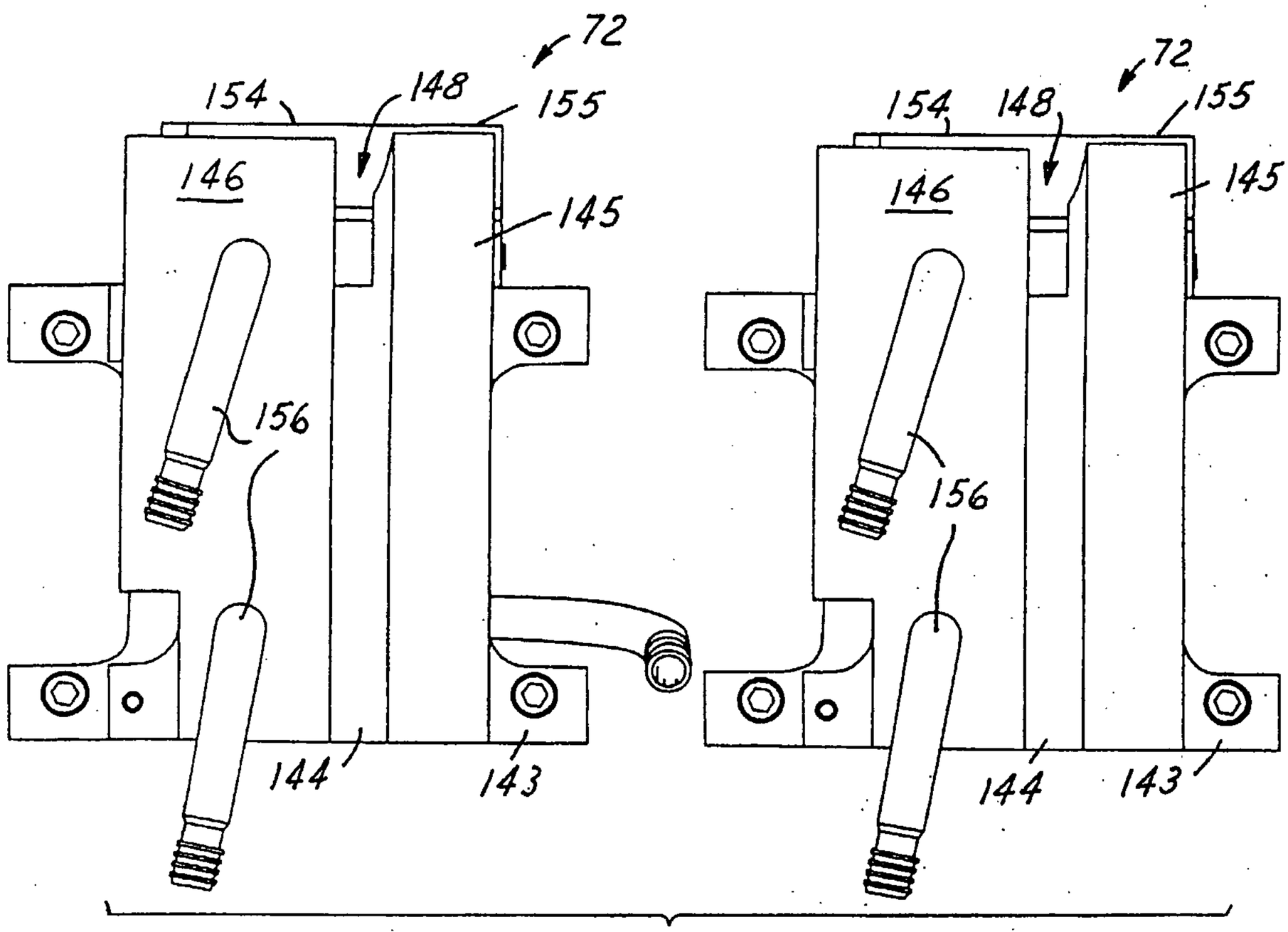
72
154
148
155
146
145
156
144
143
72
154
148
155
146
145
156
144
143

FIG. 29

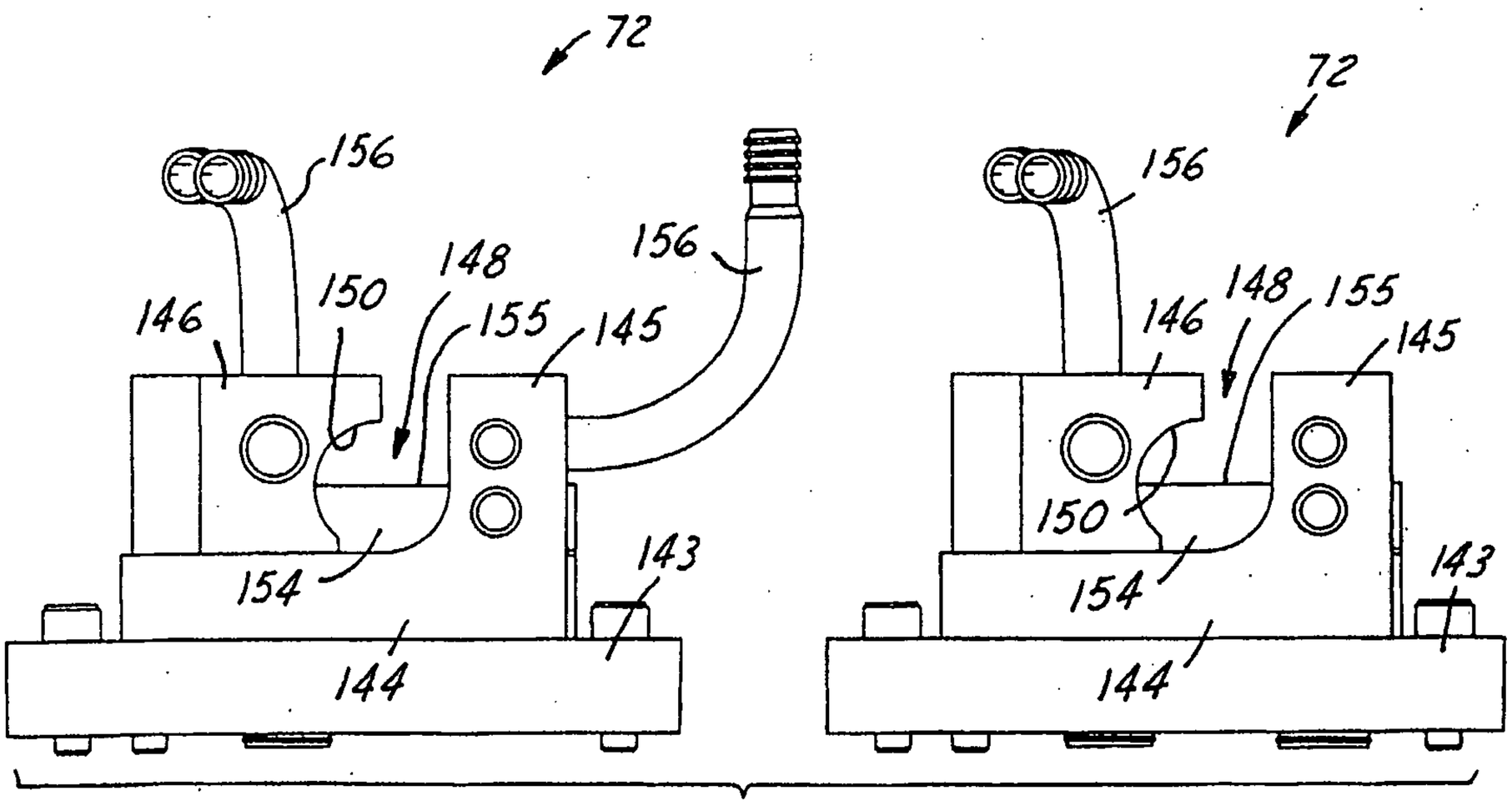
72
156
156
148
150
155
146
145
154
143
144
72
156
148
155
146
145
150
154
143
144

FIG. 30

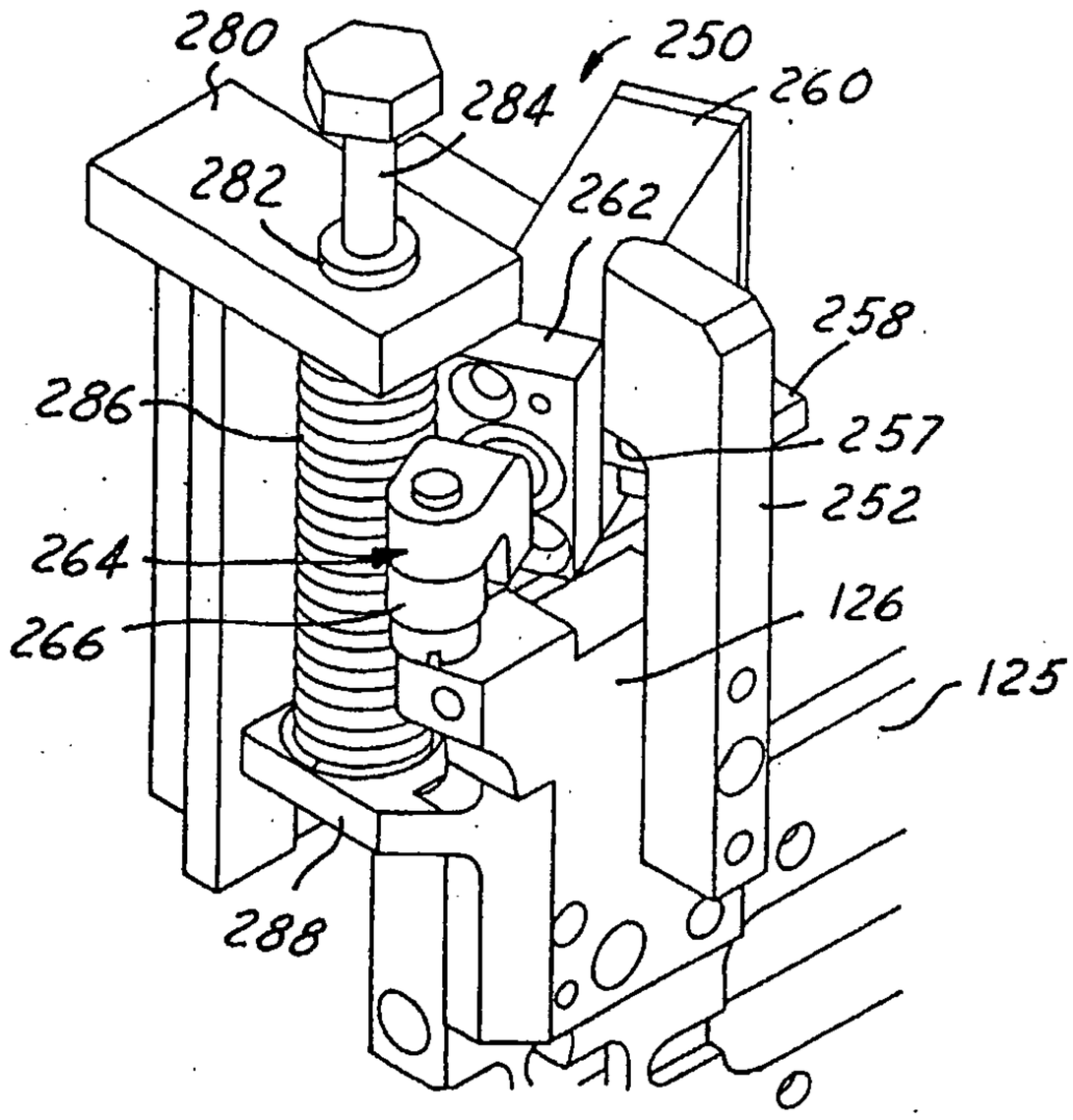

FIG.31

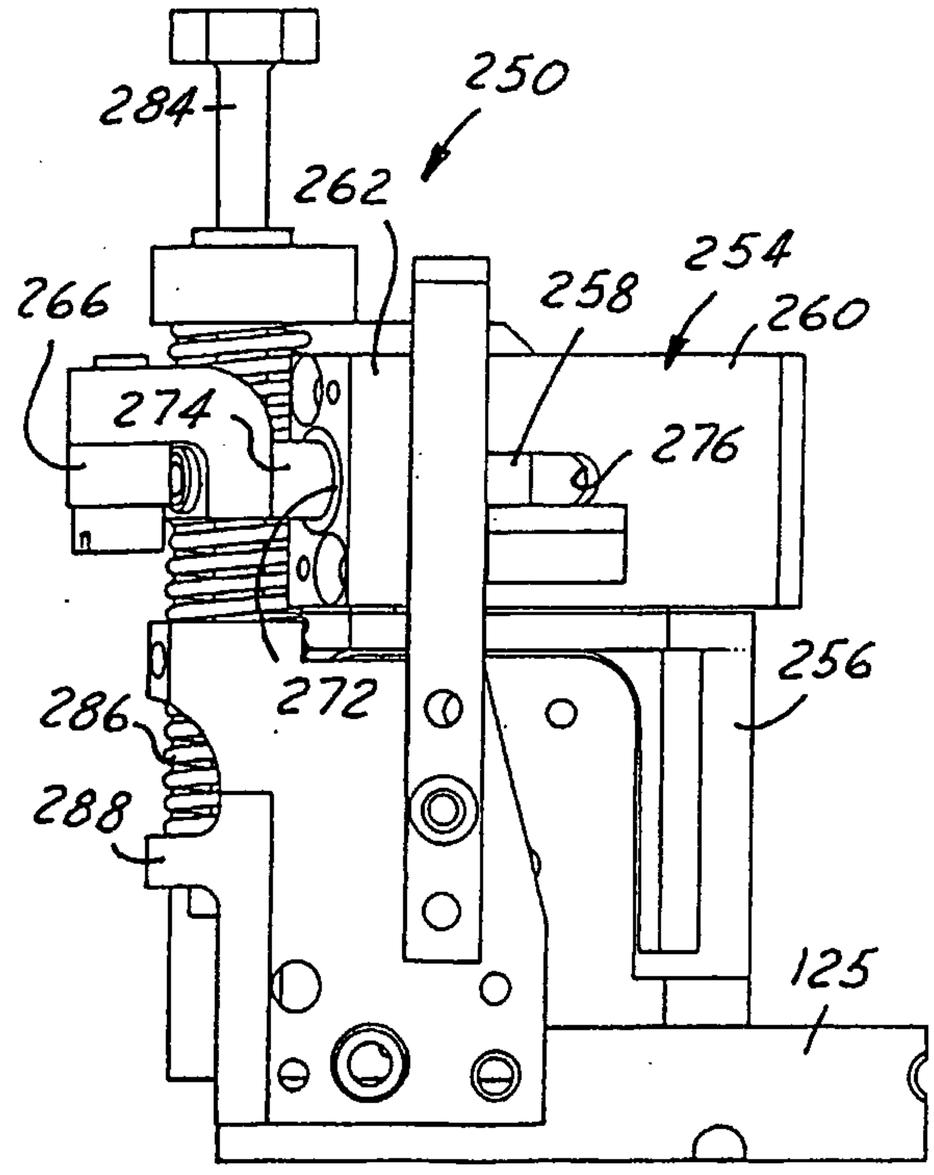

FIG.32

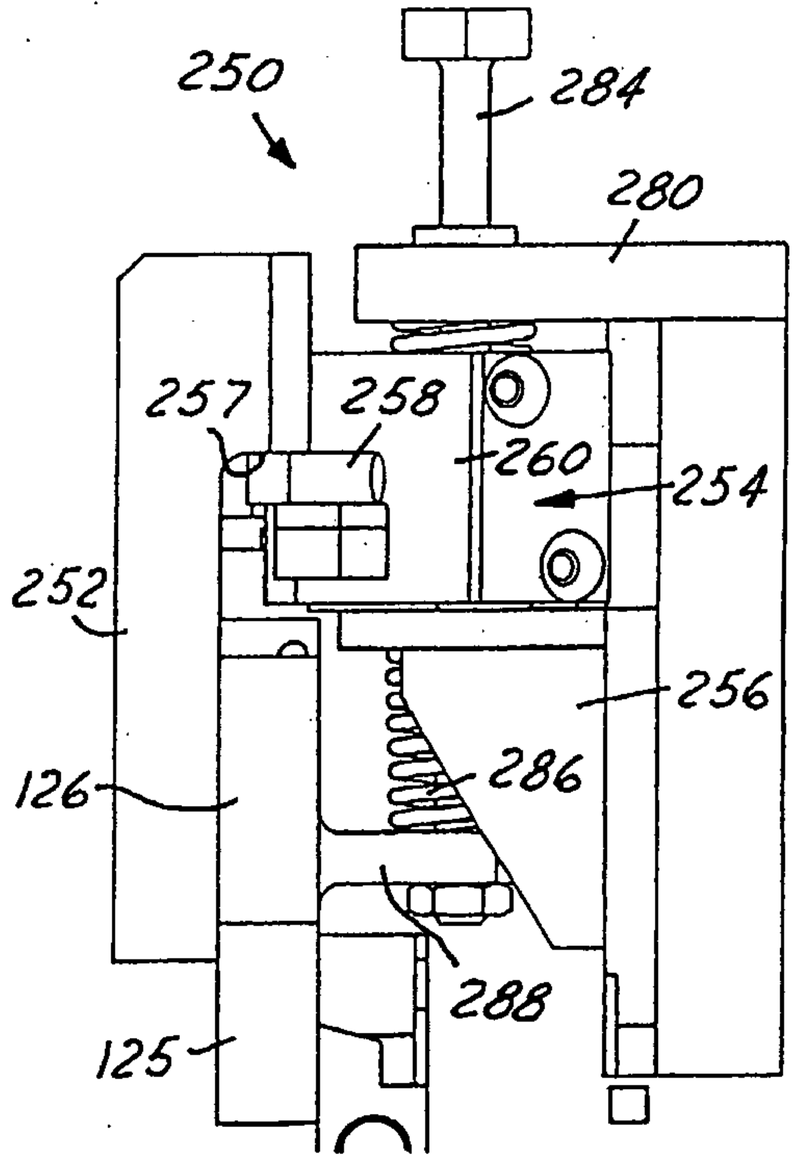

FIG.33

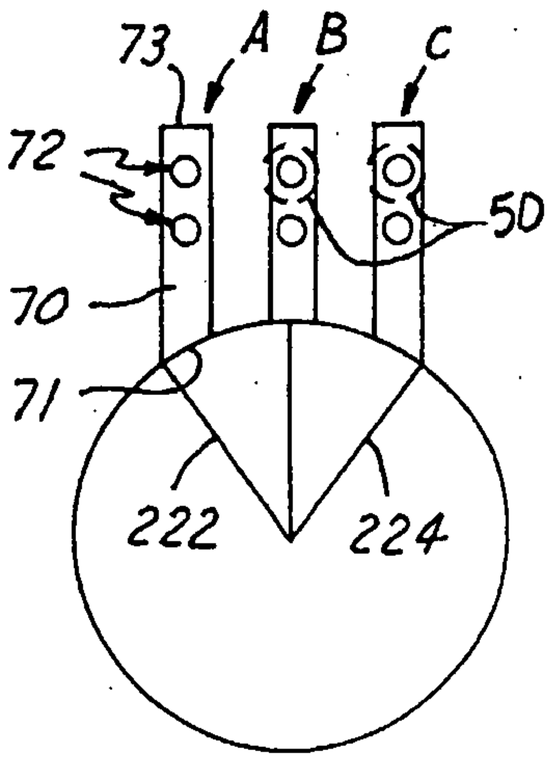

FIG. 34

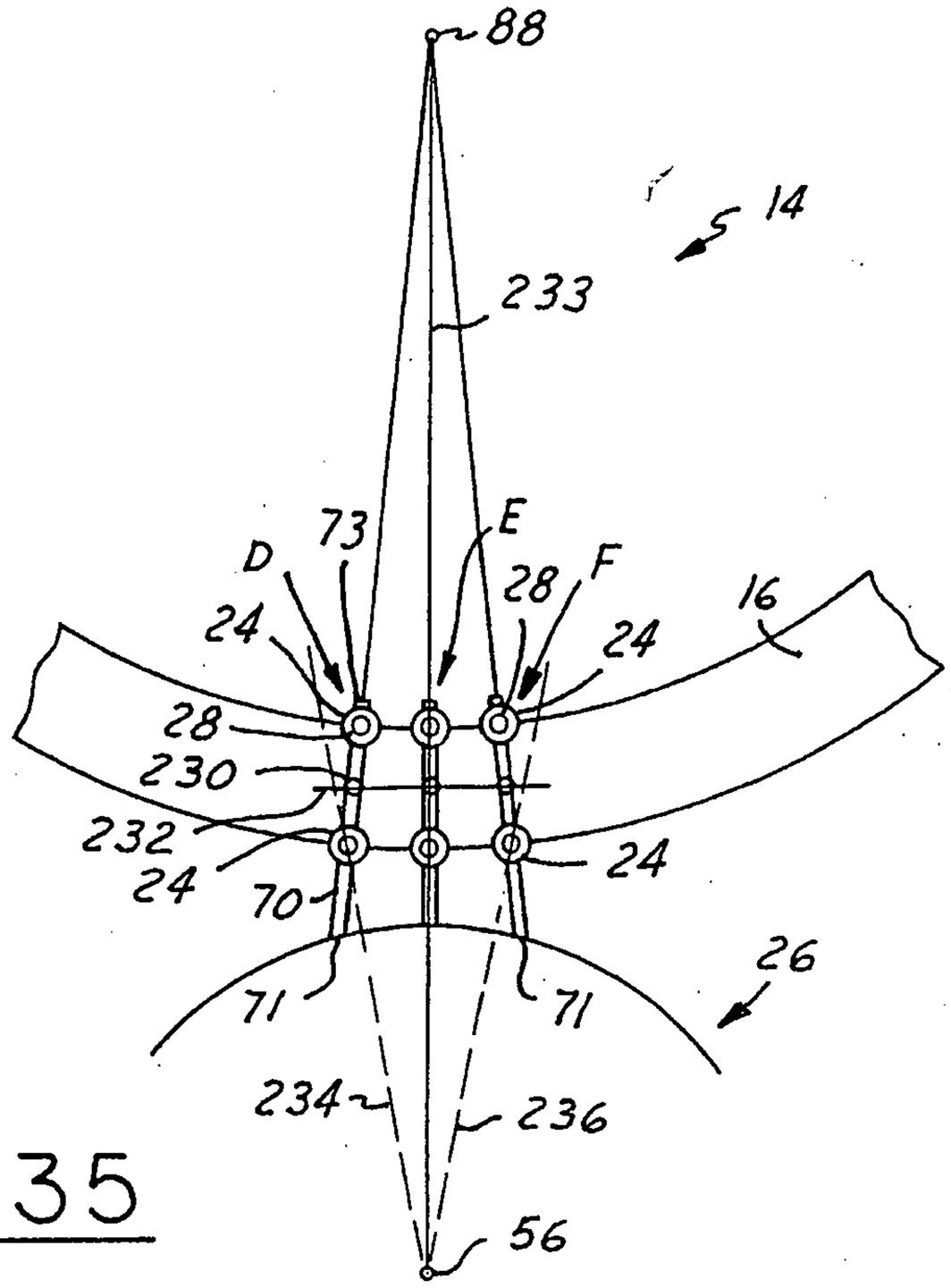

FIG. 35

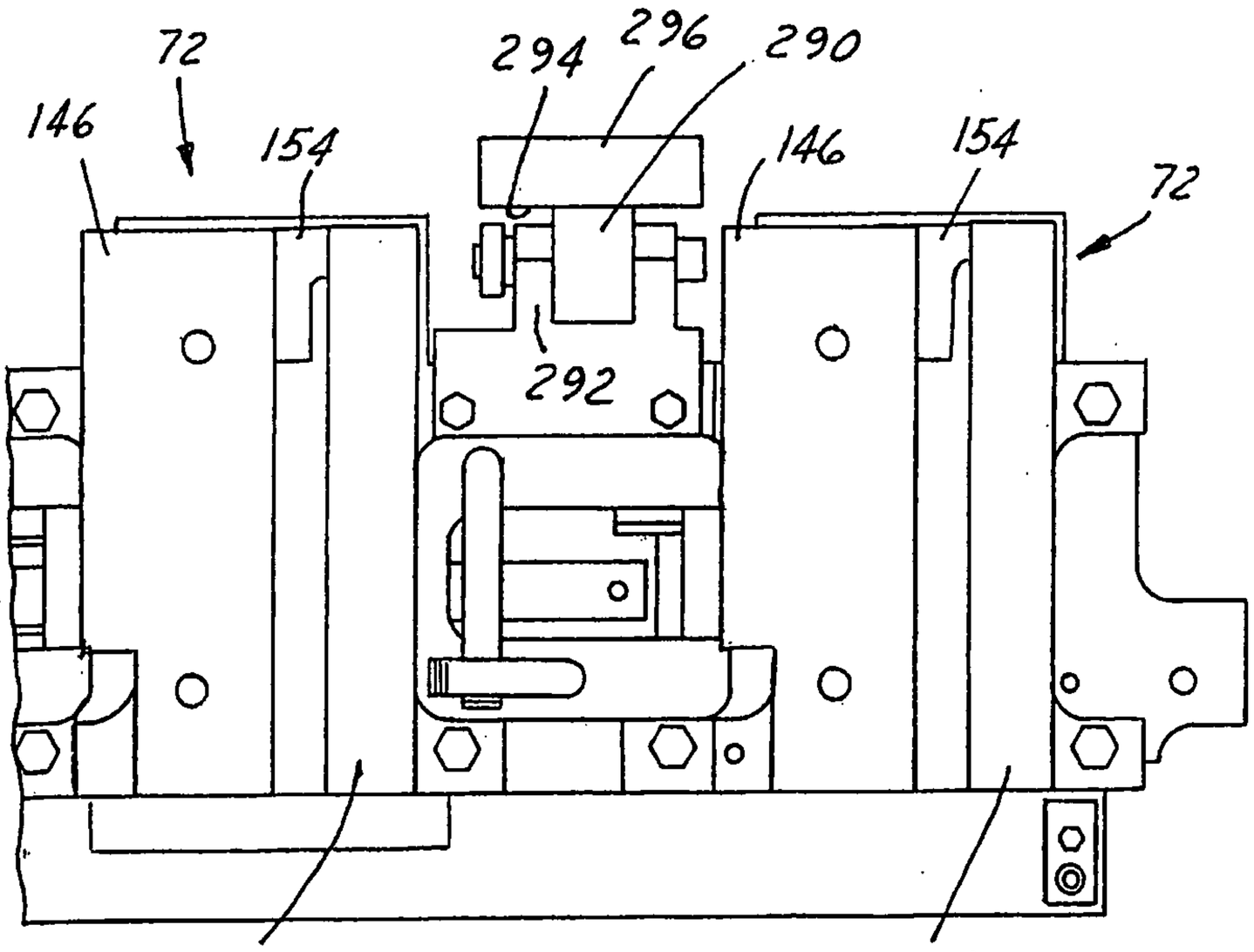

FIG. 36

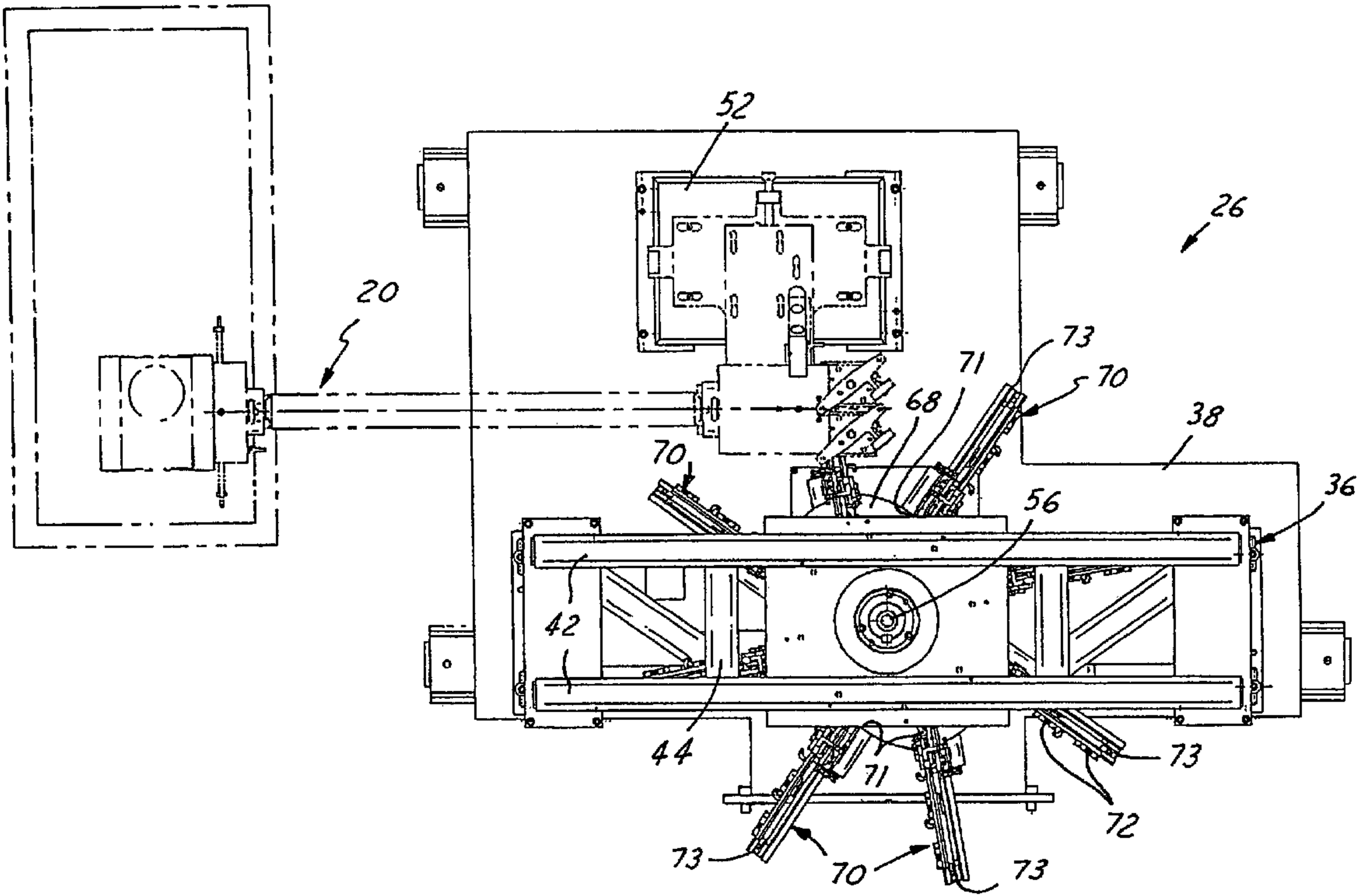
52
26
20
73
71
70
68
38
70
36
56
42
44
71
73
72
73
70
73