J. S. ROGINSKI.

RECEPTACLE FOR CIGAR ASHES.

APPLICATION FILED AUG. 14, 1915.

1,213,262. Patented Jan. 23, 1917.

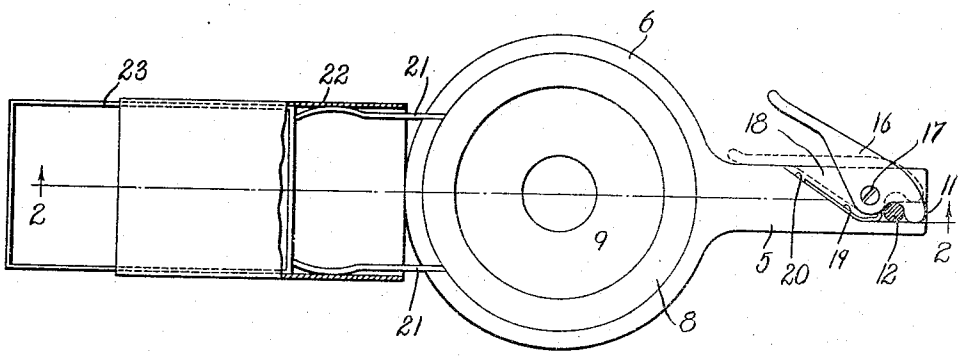

Fig. 1.

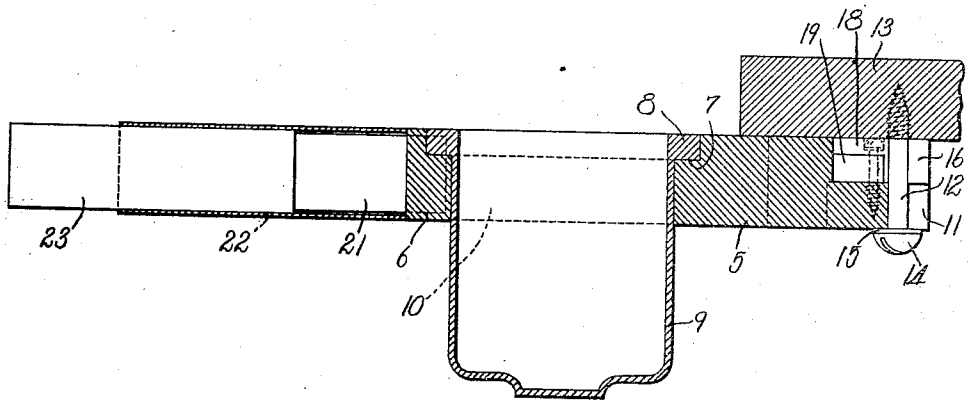

Fig. 2.

Witnesses:
Herman R. Hoffman.
Bernard A. Powell.

Inventor:
John S. Roginski,
by his attorney.
Charles S. Gooding

THE NORRIS PETERS CO., PHOTO-LITHO., WASHINGTON, D. C.

UNITED STATES PATENT OFFICE.

JOHN S. ROGINSKI, OF BOSTON, MASSACHUSETTS.

RECEPTACLE FOR CIGAR-ASHES.

1,213,262. Specification of Letters Patent. Patented Jan. 23, 1917.

Application filed August 14, 1915. Serial No. 45,495.

To all whom it may concern:

Be it known that I, JOHN S. ROGINSKI, a subject of Nicholas II of Russia, residing at Boston, in the county of Suffolk and State of Massachusetts, have invented new and useful Improvements in Receptacles for Cigar-Ashes, of which the following is a specification.

This invention relates to a receptacle for ashes from cigars, cigarettes and the like, the object of the invention being to provide an ash tray which can be pivotally mounted on a suitable support and can also be readily detached by hand from said support without the use of tools, and attached to another support by hand without the use of tools so that one ash tray can be used in a variety of places. For example, the same may be supported upon a pivotal pin attached to the under side of a table or to a pivotal pin attached to the under side of a chair arm.

The object of the invention is further to supply a device of the character set forth which is provided with a convenient means for attaching a match box thereto.

Referring to the drawings: Figure 1 is a plan view of my improved receptacle for ashes illustrating a match box supported thereon, and shown partly in section, the pivotal pin for the device also being shown in section. Fig. 2 is a sectional elevation taken on line 2—2 of Fig. 1.

Like numerals refer to like parts throughout the several views of the drawings.

In the drawings, 5 is an arm which terminates at its outer end in an annular flange 6. Said flange 6 has an annular groove 7 provided in its upper face and constructed to receive an annular flange 8 provided on the upper end of an ash receptacle 9, said ash receptacle being preferably cylindrical in form and arranged to project through a circular opening 10 within the annular flange 6 of the rim 5. The end of the arm 5 opposite to the annular flange 6 is slotted at 11 to receive a pivotal pin 12, this pin preferably being constructed with a screw-threaded end which has screw-threaded engagement with a suitable support 13. The lower end of the pin 12 is provided with a head 14 and between the head 14 and the lower face of the arm 5 a washer 15 is provided.

The arm 5 is detachably connected to the pin 12 by a latch lever 16 which is pivoted at 17 to the arm 5, said arm being provided with a recess 18 to receive a part of the latch 16 while said latch is held in engagement with the pin 12 by a spring 19, one end of which is fastened to the latch 16, and the other end of which bears against a shoulder 20 on the arm 5.

On the outer end of the arm 5 two spring fingers 21 are provided which are arranged to project into the cover 22 of a slidable match box 23 of well known construction, whereby said match box is supported upon the arm 5.

In using the device hereinbefore specifically described, the ashes from the cigar or cigarette are deposited in the receptacle 9 when it is in the position illustrated in the drawings. When not in use the receptacle may be pushed back beneath the support 13 by swinging the same on the pivotal pin 12. When it is desired to empty the ashes out of the receptacle 9, said receptacle may be removed from the arm 5 for this purpose. When it is desired to place the arm upon another pivotal pin, the latch lever 16 is moved to the position illustrated in dotted lines (Fig. 1) and the arm 5 can then be withdrawn from the pin 12 and placed upon a similar pin provided upon another support. When the lever 16 is released it will assume the position shown in full lines and will thus detachably connect the arm 5 to the pivotal pin 12.

The match box 23 is of well known construction and has a sliding cover 22 thereon into which the fingers 21, 21 project, at the same time causing the box 23 to partly project from the cover 22, so that the matches therein may be easily reached.

Having thus described my invention, what I claim and desire by Letters Patent to secure is:

1. A device of the character described having, in combination, an arm with a slot therein extending inwardly from one edge of said arm, a pin adapted to be fastened to a suitable support and projecting through said slot, a head on said pin whereby said arm is prevented from moving downwardly on said pin and a latch pivoted on said arm and constructed and arranged to engage said pin, whereby said arm is pivotally and detachably connected to said pin.

2. A device of the character described having, in combination, an arm with a slot therein extending inwardly from one edge of said arm, a pin adapted to be fastened to a suitable support and projecting through

said slot, a head on said pin whereby said arm is prevented from moving downwardly on said pin and a spring-actuated latch lever pivoted on said arm and provided with a recess in one edge thereof arranged to engage said pin whereby said arm is pivotally and detachably connected to said pin.

In testimony whereof I have hereunto set my hand in presence of two subscribing witnesses.

JOHN S. ROGINSKI.

Witnesses:
DANIEL A. ROLLINS,
WILLIAM A. COOKE.

Copies of this patent may be obtained for five cents each, by addressing the "Commissioner of Patents, Washington, D. C."