July 29, 1941. E. DAVIS 2,251,120

EXERCISING MACHINE

Filed May 28, 1940 2 Sheets-Sheet 1

FIG. 1

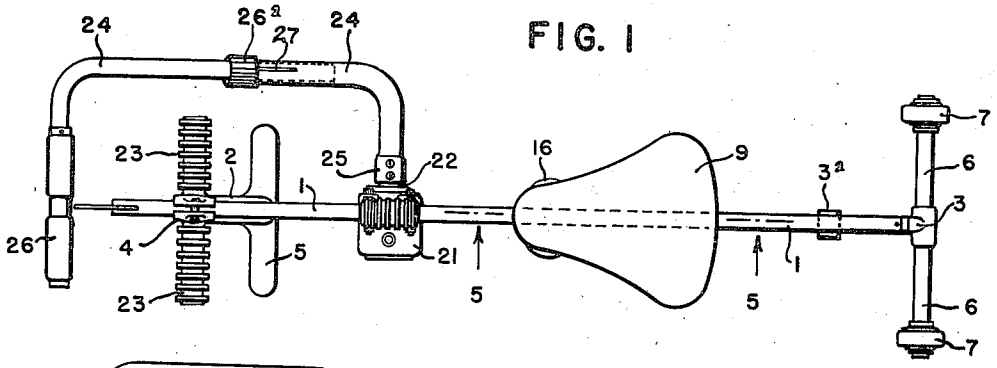

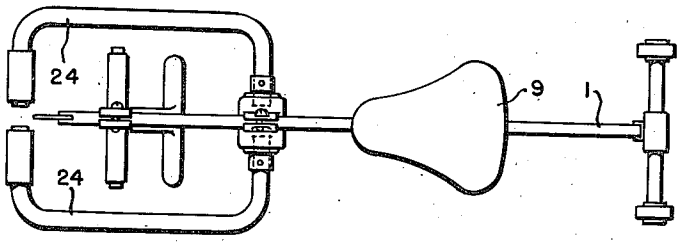

FIG. 7

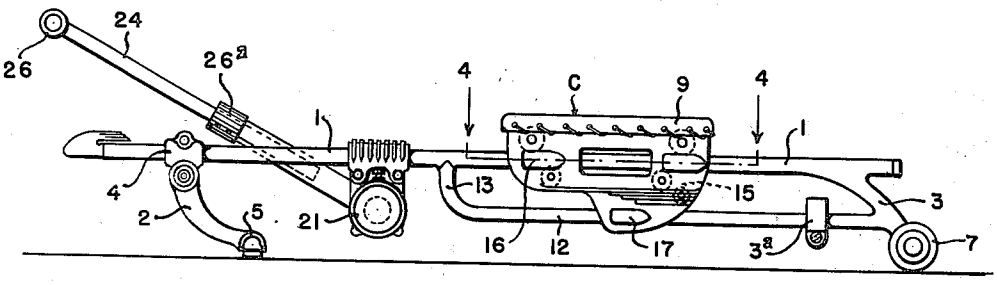

FIG. 2

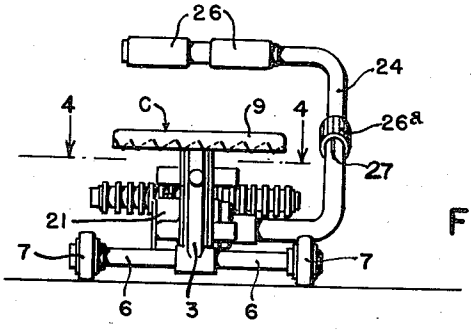

FIG. 3

INVENTOR.

ERNEST DAVIS

BY Bodell & Thompson.

ATTORNEYS.

July 29, 1941. E. DAVIS 2,251,120

EXERCISING MACHINE

Filed May 28, 1940 2 Sheets-Sheet 2

FIG. 4

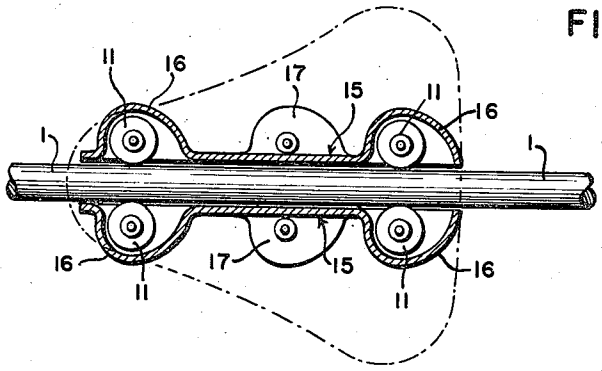

FIG. 5

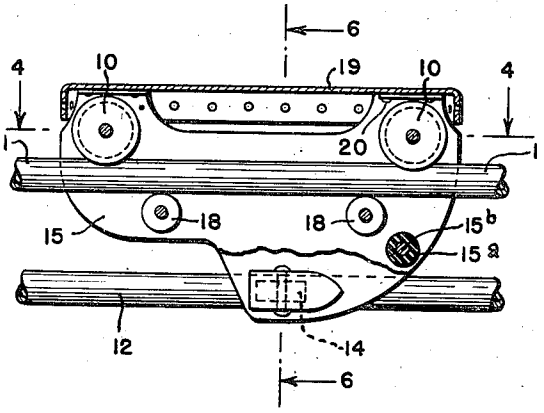

FIG. 6

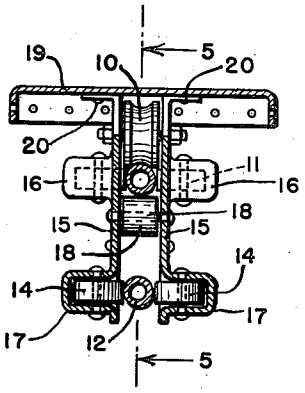

INVENTOR.
ERNEST DAVIS
BY Bodell & Thompson.
ATTORNEYS.

Patented July 29, 1941 2,251,120

UNITED STATES PATENT OFFICE

2,251,120

EXERCISING MACHINE

Ernest Davis, Syracuse, N. Y.

Application May 28, 1940, Serial No. 337,669

7 Claims. (Cl. 272—72)

This invention relates to exercising machines, and particularly to rowing machines, and has for its object a rowing machine, which is particularly simple and compact in construction, so as to take up minimum space, and consists of a minimum number of parts, so as to be extremely economical in manufacture. More specifically, it has for its object a rowing machine comprising a frame, which consists of a central lengthwise backbone member or bar having feet at its opposite ends by which it is supported on the floor, a sliding seat movable along the bar, a resistor depending from the bar in front of the seat, and an operating member having a fore-and-aft movement and located a sufficient distance laterally from the bar to give room for the legs of the operator, when sitting on the seat with the feet on the foot rest at the front end of the frame on opposite sides of the bar, the operating member having a transverse handle extending crosswise of the plane of the lengthwise bar; the entire operating member including the handle and its coupling to the resistor being C-shaped in general form.

The invention consists in the novel features and in the combinations and constructions hereinafter set forth and claimed.

In describing this invention, reference is had to the accompanying drawings in which like characters designate corresponding parts in all the views.

Figures 1, 2 and 3 are respectively a plan view, a side elevation and a front elevation of the rowing machine.

Figure 4 is an enlarged sectional view on line 4—4, Figure 3.

Figure 5 is an enlarged fragmentary sectional view on line 5—5, Figure 1.

Figure 6 is a sectional view on line 6—6, Figure 5.

Figure 7 is a view similar to Figure 1 showing a pair of operating members, one for each hand.

1 designates the lengthwise member of the frame, this being a bar or rail constituting the backbone of the entire machine. It is here shown as tubular. 2 and 3 designate front and rear legs for supporting the frame on the floor, the front leg being provided with a clamp, as a split clamp 4, which is secured to the front end of the bar or backbone 1. The leg 2 has laterally extending foot portions 5 at its lower end. The rear leg 3 is here shown as having laterally extending feet 6 on which are provided rollers 7.

9 designates generally a seat slidable along the backbone or bar or rail 1 or the rear portion thereof, the seat being here shown as provided with spaced apart rollers 10 riding on the upper surface of the bar and also with rollers 11 engaging the side surfaces of the bar 1. The seat is held from turning about the bar by coaction with a frame or track bar 12 located below and parallel to, and in the vertical plane of the rear portion of the bar 1. The bar or rail 12 has an upwardly extending bracket portion 13 which is joined to the intermediate portion of the bar or rail 1. The bar 12 is joined at its rear end to the rear leg 3. The seat is provided with antifriction means, as rollers 14, coacting with the lateral sides of the bar 12.

The frame of the seat which supports the rollers and the seat top, is formed of spaced apart sheet metal plates 15 formed up to have boxes 16 and 17 in which the rollers 11 and 14 are mounted, the plates being held assembled by the axles for the rollers 10 and also the axles of rollers 18 arranged between the plates 15 and in position to engage with the lower surface of the bar 1 to hold the seat from being jumped off its track. The side plates 15 are further held assembled by the seat bottom 19 to which they are riveted at 20, the seat bottom being formed of sheet metal and overlaid with a suitable covering or padding C. The seat is also provided with a bumper 15^a arranged to engage an adjustable stop 3^a, the bumper being shown as a rubber block or bushing on a pin or rivet 15^b between the rear portions of the side plates 15.

21 designates, generally, a resistor, this including a casing which is clamped on the bar 1 in front of the path of movement of the seat 9, the casing depending from the bar and being formed with a chamber in which a movable member, not shown, is located, having a shaft 22 extending laterally at one side of the vertical plane of the frame of the bar or backbone 1 of the frame. The resistor is of the hydraulic type, and as the construction of hydraulic resistors or checks is well known, further description thereof is thought to be unnecessary.

23 designates laterally extending adjustable foot rests which are supported at the front end of the bar 1 and preferably extend from the front support 2. They are adjustable to different locations along the bar 1 into position most adaptable for convenience to the user. 24 designates an operating member having a fore-and-aft movement far enough on one side to leave ample space for the legs of the user, when sitting on the seat with his feet on the foot rests 23 on opposite sides of the bar 1. The operating member is preferably of tubing and is here shown as in the

general form of a C, one arm of the C being arranged coaxially with and coupled to the shaft 22, as at 25, and the other arm of the C extending transversely of the vertical plane of the bar 1 and constituting a handle portion 26. The foot rests 23 are here shown as carried by the front leg 2 which is secured to the bar or rail 1 by the split clamp 4. The foot rests are shiftable or adjustable by loosening the split clamp 4 and shifting the leg 2 along the bar or rail 1 and again tightening the clamp.

As seen in Figure 1, the operating member is adjustable to bring the handle end thereof different distances relatively to the axis of the operating member, this adjustment being illustrated as provided by making the intermediate portion of the C formation extensible or in sections, one telescoping within the other, and held in adjusted position by a suitable locking sleeve 26a threading on the outer telescoping section, which is split at 27, and the split portion tapered so as to contract when the sleeve is tightened thereon.

In Figure 7, a rowing machine is shown in which there are two oppositely disposed operating members, one for each hand, and the resistor 21 is formed double so that the operating members can be worked in unison or worked alternately.

In this exercising machine, all parts are carried from the single backbone 1 which constitutes practically the entire frame, the seat sliding or rolling along the backbone and being held from turning or tilting laterally about the backbone, the resistor depending from the backbone and the operating member being so located that the user can get on the machine from one side thereof and also so that the operating member or members do not interfere with the legs and knees of the operator when moving the handle fore and aft.

What I claim is:

1. An exercising machine comprising a frame including a single lengthwise rail, means at opposite ends of the rail for supporting the same, a seat mounted on the rail to move lengthwise thereof, foot rests supported at the front end of the rail, a resistor supported by the rail between the seat and the foot rests and having a shaft extending transversely of said rail to one side thereof, and an operating member for the resistor extending in an upward direction from one lateral end of the shaft of the resistor and having a horizontally laterally extending handle at its upper end transversely of the vertical plane of the rail, the operating member having a fore-and-aft movement, all whereby the rail forms a single backbone, and the seat, resistor and foot rests are carried by the backbone, and the upwardly extending part of the operator is at one side of the path of movement of the seat.

2. An exercising machine comprising a frame including a single lengthwise horizontal rail constituting a backbone, legs at the opposite ends of the rail for supporting the same, a seat movable along the rail and having bearings running on the rail, and seat guiding means supported by the rail below and in the vertical plane of the same for coacting with the seat to prevent the same from turning laterally about the rail, a resistor supported by the rail in front of the seat, the resistor including a horizontally extending shaft, an operating member located at one side of the backbone rail and having a handle extending crosswise of the plane of the rail, the operating member being coupled to said shaft, and foot rests supported from the rail, the resistor being carried by the rail between the foot rests and the seat.

3. An exercising machine comprising a frame including a lengthwise rail constituting a backbone of the frame, means at opposite ends of the rail for supporting the same, a second rail supported from the former rail and located below the same, a seat movable along the backbone rail and having bearings and coacting with the backbone rail, and also having additional bearings to contact the second rail, a resistor supported by the backbone rail and located in front of the seat, the resistor including a laterally extending actuator and an operating member located at one side of the backbone rail, and having a handle portion extending crosswise of the vertical plane of the backbone rail, the operating member being coupled to the resistor actuator.

4. An exercising machine comprising a frame including a single lengthwise rail constituting the backbone of the machine, and means at the front and rear ends of the rail for supporting the same, a slide seat movable along the single rail, means located in the vertical plane of the rail and coacting with the seat to hold the seat from turning laterally about the rail, a resistor supported by the rail and adjustable thereon and in front of the slide seat, the resistor including a shaft extending laterally on one side of the vertical plane of the backbone, an operating member connected to the shaft and extending upwardly therefrom and having a handle extending crosswise of the vertical plane of the backbone, said member having a fore-and-aft movement, and foot rests carried by the backbone in front of the resistor.

5. An exercising machine comprising a supporting frame including parallel rails located one above the other in the same vertical plane, a resistor supported by the frame, and an operating member connected to the resistor and having a fore-and-aft movement, a seat movable along the rails and including side plates extending on opposite sides of the rails, and a seat bottom carried by the side plates and also including bearing members carried by the side plates and coacting with the rails.

6. An exercising machine comprising a supporting frame including parallel rails located one above the other, a resistor supported by the frame, and an operating member for the resistor and having a fore-and-aft movement, a seat movable along the rails and including side plates extending on opposite sides of the rails and a seat bottom carried by the side plates and also including rollers carried by the side plates and coacting with the upper and lower surfaces and the side surfaces of the upper rail, and with the side surfaces of the lower rail.

7. An exercising machine comprising a supporting frame, a seat movable back and forth along the frame, a resistor carried by the frame including a horizontal shaft extending transversely of the frame, a pair of operating members including upwardly extending portions located out of and on opposite sides of the path of movement of the seat and on opposite sides of the frame, said members being connected at their lower ends to opposite ends of said shafts, and having handle portions extending toward each other crosswise of the path of movement of the seat, said operating members being movable fore-and-aft independently of each other.

ERNEST DAVIS.