Dec. 4, 1956 H. B. SAUNDERS 2,772,721

SEAT UNIT FOR BATHTUBS

Filed Nov. 9, 1954 2 Sheets-Sheet 1

Fig. 1

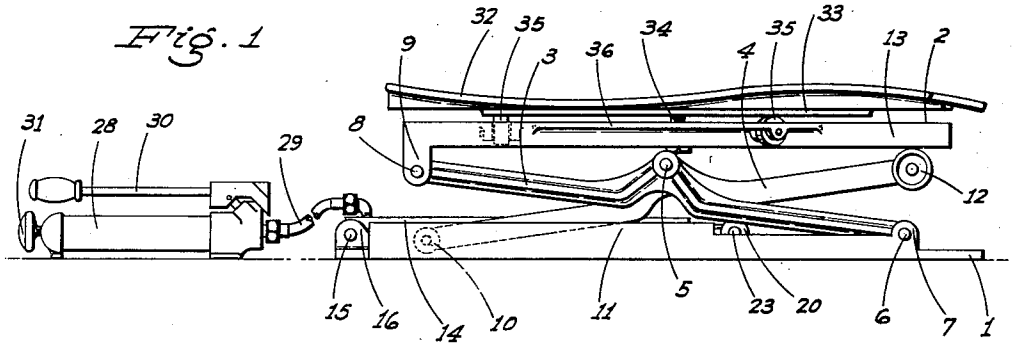

Fig. 2

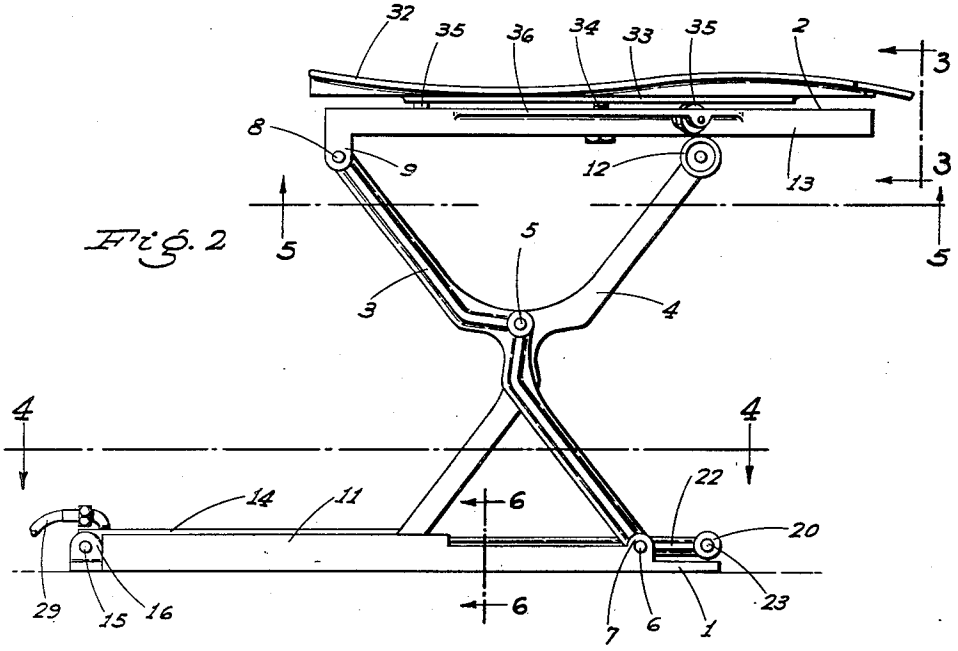

Fig. 3

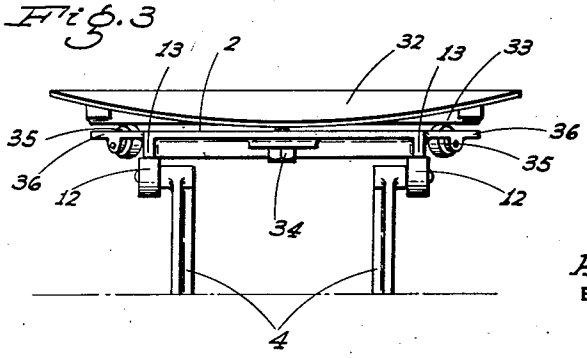

INVENTOR
Harry Baird Saunders
BY Webster & Webster
ATTYS.

Dec. 4, 1956 H. B. SAUNDERS 2,772,721

SEAT UNIT FOR BATHTUBS

Filed Nov. 9, 1954 2 Sheets-Sheet 2

Fig. 4

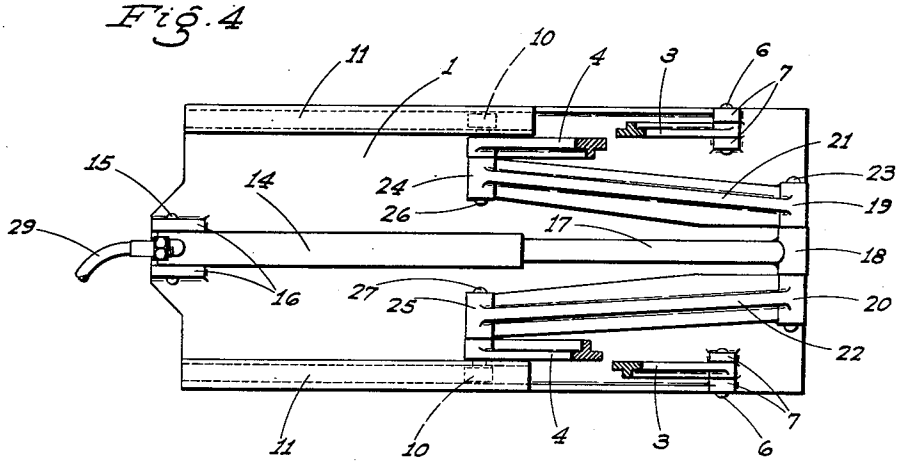

Fig. 5

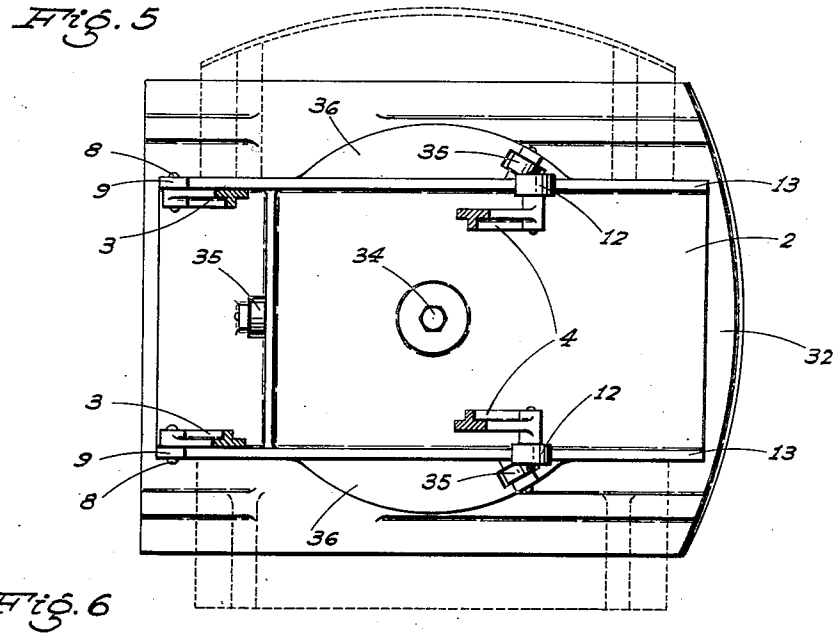

Fig. 6

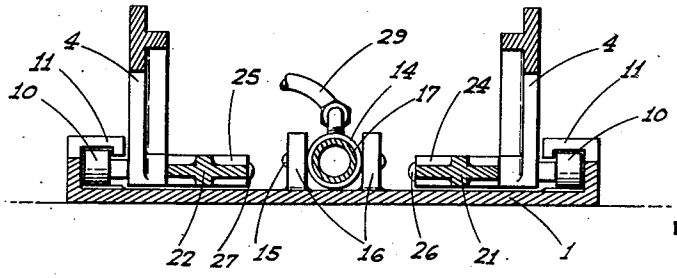

INVENTOR
Harry Baird Saunders
BY Webster & Webster
ATTYS.

United States Patent Office

2,772,721

Patented Dec. 4, 1956

2,772,721

SEAT UNIT FOR BATHTUBS

Harry Baird Saunders, Woodland, Calif.

Application November 9, 1954, Serial No. 467,763

4 Claims. (Cl. 155—36.5)

The principal object of this invention is to provide a seat unit which is operative to lower a seated person, such as an invalid, from an initial position at substantially normal chair height or level to a position relatively close to the surface on which the unit rests, and to thereafter return such seated person to said initial position.

Another important object of the invention is to provide a seat unit which is especially designed, but not limited, for use in a bathtub whereby to lower an invalid person into the tub for bathing and to thereafter raise such person to a position which facilitates his removal from the tub.

An additional object of the invention is to provide the seat unit with a novel power adjusted lever arm assembly for effecting the desired movement of the seat between different levels; such assembly including transversely spaced pairs of intersecting, pivotally connected lever arms whose vertical contraction or extension is accomplished by means of a fluid pressure actuated power cylinder associated with the unit.

A further object of the invention is to provide a seat unit which is compact and portable so that it can be readily placed in, or removed from, a bathtub.

It is also an object of the invention to provide a seat unit which is designed for ease and economy of manufacture, and simplicity of use.

Still another object of the invention is to provide a practical, reliable, and durable seat unit for bathtubs, and one which will be exceedingly effective for the purpose for which it is designed.

These objects are accomplished by means of such structure and relative arrangement of parts as will fully appear by a perusal of the following specification and claims.

In the drawings:

Fig. 1 is a side elevation of the seat unit in contracted or lowered position.

Fig. 2 is a similar view, but shows the unit in extended or raised position.

Fig. 3 is a fragmentary front end elevation of the seat unit taken on line 3—3 of Fig. 2.

Fig. 4 is a sectional plan view taken on line 4—4 of Fig. 2.

Fig. 5 is a horizontal section taken on line 5—5 of Fig. 2 looking upwardly at the bottom side of the platform and the seat plate supported thereby.

Fig. 6 is an enlarged transverse vertical section on line 6—6 of Fig. 2.

Referring now more particularly to the drawings, and to the characters of reference marked thereon, the novel seat unit comprises a rectangular, elongated base 1, and a horizontal, similarly elongated platform 2 is disposed above the base 1, being vertically adjustably supported from the latter as follows:

Between the base 1 and platform 2 the unit includes, in transversely spaced relation—i. e. at each side thereof—a pair of intersecting lever arms 3 and 4; each such pair of lever arms being pivotally connected, intermediate their ends, as at 5, for lazy-tong or scissors-like action.

The lower ends of the lever arms 3 are pivotally connected, as at 6, to ears 7 which upstand from the forward portion of the base 1, while at their upper ends said arms 3 are pivotally connected, as at 8, to ears 9 which depend from the rear of said platform 2.

The lower ends of the lever arms 4 are fitted in laterally outwardly projecting relation with rollers 10 which run in integral, laterally inwardly opening guide channels 11 which extend along opposite sides of the base 1 from its rear end forward a substantial distance.

At their upper ends the lever arms 4 are fitted with rollers 12 which ride corresponding depending side flanges 13 of the horizontal platform 2.

A fluid pressure actuated power cylinder 14 is pivoted at its rear end, as at 15, between ears 16 which upstand from the rear of the base 1; such power cylinder thence extending forwardly centrally of the sides of said base.

The power cylinder 14 includes a forwardly projecting piston rod 17, shown extended in Fig. 4. At its forward end the piston rod 17 is formed with a cross sleeve 18 which is alined with, and lies in abutment between, cross sleeves 19 and 20 on the forward ends of rearwardly extending links 21 and 22; the cross sleeves 18, 19, and 20 being secured together in pivotal relation by a transverse pin 23.

At their rear ends the links 21 and 22 are formed with cross sleeves 24 and 25 which are pivoted by pins 26 and 27 to the adjacent lower ends of the corresponding lever arms 4.

With the foregoing arrangement it will be recognized that when the power cylinder 14 is actuated to advance the piston rod 17, the lower ends of the lever arms 4 are forcefully pulled forwardly by the links 21 and 22, causing extension of the described lever arm assembly and elevation of the platform 2 from is lowered position, as in Fig. 1, to its raised position, as in Fig. 2.

With such action the rollers 10 run forwardly in the guide channels 11, while the rollers 12 run rearwardly on the depending side flanges 13.

The pivot 5 for each pair of intersecting lever arms 3 and 4 is offset from the major axis of said arms in a direction such that the pivot lies above said axis when said lever arms are contracted, as in Fig. 1. The purpose of this arrangement is to prevent any dead-center binding, and to provide a more advantageous starting leverage when the piston rod 17 and links 21 and 22 thrust forwardly for the purpose of accomplishing extension of the lever arm assembly from its contracted position, as in Fig. 1.

The power cylinder 14 is adapted to be actuated by a portable hydraulic pump 28 connected in communication with said cylinder by a flexible hose 29, preferably of substantial length.

The portable hydraulic pump 28 includes an operating lever 30, and a pressure release valve (not shown) which is opened or closed by a control knob 31.

A seat plate 32 formed on the under side with an integral downwardly facing turntable disc 33 is disposed above the horizontal platform 2; said plate 32 being connected to the platform 2 for rotary motion in a horizontal plane by a central pivot bolt 34.

In order to prevent any teetering or tilting of the seat plate 32 it is supported from below by a plurality of circumferentially spaced rollers 35 mounted in connection with the platform 2, and on which rollers the turntable disc 33 rests. Certain of said rollers 35 are carried in part-circle flanges 36 integral with, and projecting laterally from, opposite sides of the platform 2.

As so mounted, the seat plate 32 may be turned from a position extending lengthwise of the platform 2 to a position extending crosswise thereof, as shown in full lines and in dotted lines, respectively, in Fig. 5.

When the above described seat unit is in use, it is placed in a bathtub, with the base **1** resting on the bottom of said tub; the portable hydraulic pump **28** preferably being disposed outside the tub, and which is possible by reason of the length of the hose **29**.

After the initially contracted seat unit is placed in the tub, the pump **28** is worked to cause operation of the power cylinder **14**; i. e. projection or advance of the piston rod **17**. This results in the lever arm assembly being extended to raise the seat plate **32** to an initial or normal position at substantially chair height, and which is usually slightly above the rim of the bathtub.

The seat plate **32** is then turned to its crosswise position, which disposes its front edge adjacent the tub rim. The invalid person is then placed on the seat and the seat is turned back to its lengthwise position; the person then being in a position for lowering into the tub. This is accomplished by slowly releasing the pressure from power cylinder **14** by manipulation of the valve control knob **31**; the lever arm assembly then gradually contracting until the seat plate **32** is in fully lowered position, and at which time the supported invalid person is disposed at a proper level in the tub for bathing.

After the bathing of the invalid person is completed, the above described operation is reversed, whereby the invalid person may be removed from the bathtub with relative ease and comfort.

With the described seat unit an invalid person can be bathed in a bathtub without the usual difficulties encountered in placing the person in or removing him from the tub, and of course with much greater safety.

From the foregoing description it will be readily seen that there has been produced such a device as will substantially fulfill the objects of the invention, as set forth herein.

While this specification sets forth in detail the present and preferred construction of the device, still in practice such deviations therefrom may be resorted to as do not form a departure from the spirit of the invention, as defined by the appended claims.

Having thus described the invention the following is claimed as new and useful, and upon which Letters Patent are desired:

1. A portable, vertically adjustable seat unit adapted for use on a bathtub or the like, comprising a base, a platform disposed above the base, transversely spaced pairs of lever arms extending between the base and platform, the lever arms of each pair intersecting and being pivoted together intermediate their ends, means pivoting one arm of each pair at the adjacent ends to the base and platform, a roller on the lower end of the other arm of each pair, guide channels on the base corresponding to and having the corresponding rollers therein, a roller on the upper end of said other arm of each pair, said last named rollers supporting the platform from below, a fluid pressure actuated power cylinder extending along the base between the guide channels, means securing the power cylinder at one end to the base, links connected between the opposite end of the power cylinder and the lower ends of said other arms of the pairs, and a seat mounted on the platform.

2. A seat unit, as in claim 1, in which the seat is centrally pivoted on the platform for rotation about a vertical axis.

3. A portable, vertically adjustable seat unit adapted for use in a bathtub or the like, comprising a flat longitudinal base, a seat supporting longitudinal platform disposed above the base, a lever arm assembly including one pair of transversely spaced lever arms pivoted at their lower ends to the forward portion of the base and pivoted at their upper ends to the rearward portion of the platform, and another pair of transversely spaced lever arms provided with rollers at the ends thereof; transversely spaced longitudinal guide channels on the rearward portion of the base and in which channels the rollers at the lower ends of said other lever arms engage, the rollers on the upper ends of said other lever arms supporting the forward portion of the platform from beneath, the adjacent lever arms of said pairs intersecting and being pivoted together at their ends for vertical, scissors-like extension or contraction of said lever arm assembly, and power means between the base and said lever arm assembly operative to cause such extension or contraction thereof.

4. A seat unit, as in claim 3, in which said power means includes a longitudinal power cylinder connected between the base and said other arms adjacent the lower ends of the latter.

References Cited in the file of this patent

UNITED STATES PATENTS

213,512	Landis	Mar. 25, 1879
755,706	Schellenbach	Mar. 29, 1904
848,465	Homeyer	Mar. 26, 1907
1,039,134	Jenkins	Sept. 24, 1912
1,191,772	Dickerson	July 18, 1916
2,370,887	Soskin	Mar. 6, 1945
2,547,827	Logan	Apr. 3, 1951
2,625,839	Coleman	Jan. 20, 1953

FOREIGN PATENTS

291,776	Switzerland	Oct. 1, 1953
807,849	France	Jan. 22, 1937