Jan. 28, 1958 P. A. LONG 2,821,122

LAUNDRY MARKING AND STAPLING MACHINE SHUT-OFF DEVICE

Filed Feb. 9, 1956 2 Sheets-Sheet 1

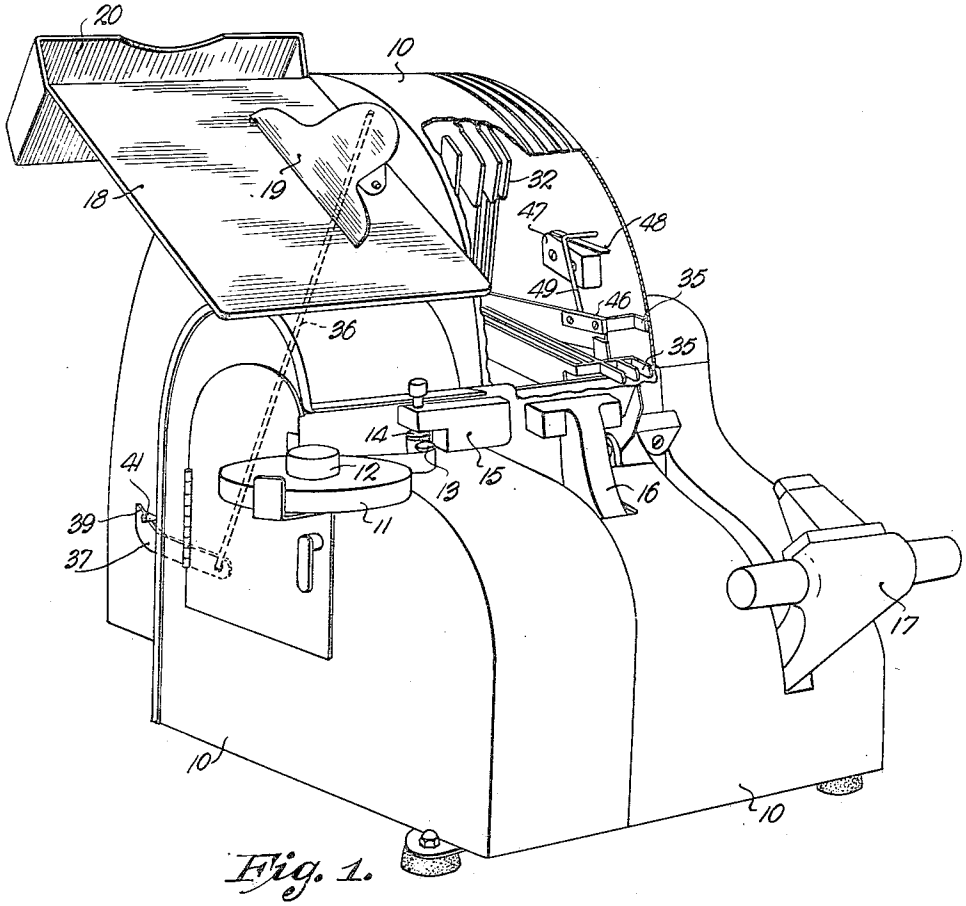

Fig. 1.

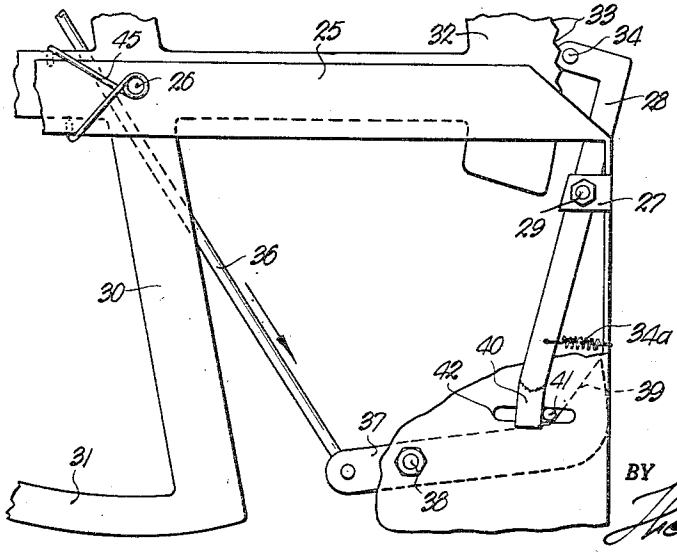

Fig. 3.

INVENTOR.
Phil A. Long
BY
Thos E. Scofield
ATTORNEY.

Jan. 28, 1958 P. A. LONG 2,821,122

LAUNDRY MARKING AND STAPLING MACHINE SHUT-OFF DEVICE

Filed Feb. 9, 1956 2 Sheets-Sheet 2

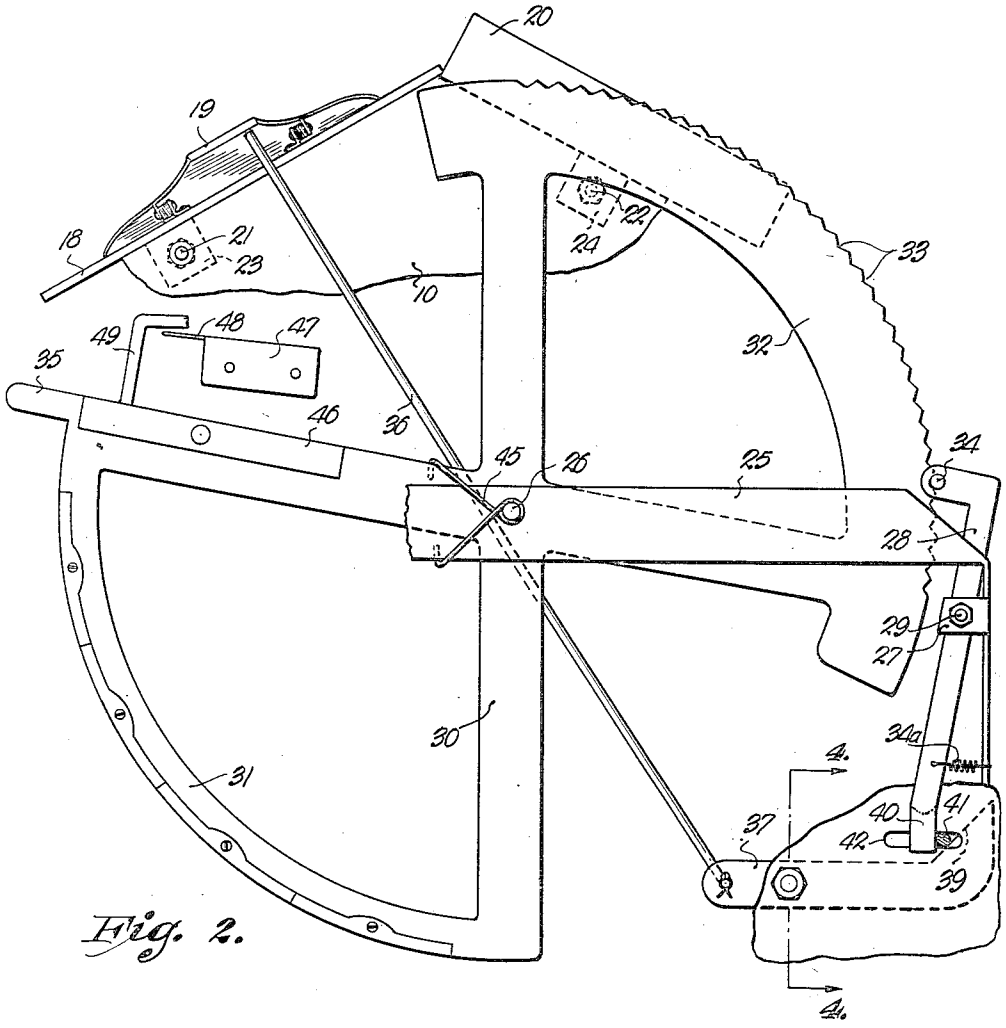

Fig. 2.

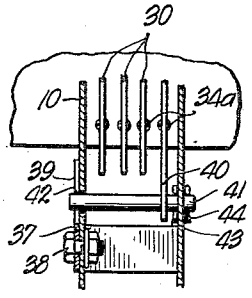

Fig. 4.

INVENTOR.
Phil A. Long
BY
Thos. E. Scofield
ATTORNEY.

United States Patent Office 2,821,122 Patented Jan. 28, 1958

2,821,122

LAUNDRY MARKING AND STAPLING MACHINE SHUT-OFF DEVICE

Phil A. Long, Kansas City, Mo., assignor of one-half to A. O. Long, Jr., Johnson County, Kans., and one-half to Phil A. Long, Kansas City, Mo.

Application February 9, 1956, Serial No. 564,523

6 Claims. (Cl. 93—88)

This invention relates to power-operated machines for simultaneously marking laundry identification tags and stapling such tags to garments or laundry pieces in laundries to provide identification thereof and refers more particularly to an improvement in such power operated marking and stapling machines wherein errors of marking different laundry batches with a single number or mark are prevented.

Most laundries today employ power-operated marking and stapling machines for the purpose of indicating on each garment an identifying number or mark so that when the cleaning process is finished, the various types of garments may be reassembled into separate bundles to be returned to the respective owners. Proper identification of each garment with a given bundle number is very essential to avoid confusion and losing of garments.

Perhaps the most common type of marking and stapling machine in use employs a mechanism whereby the number to be stamped on the tags for a given laundry batch is hand set by the machine operator. When such batch has been tagged with this number, it is the operator's duty to set a new number on the machine to properly mark the tags for the next laundry batch. Unfortunately, it is not uncommon for even an experienced marking and stapling machine operator to forget or neglect to reset the numbering device on the machine for a multiplicity of different laundry batches, thereby marking the identification tags attached thereto all with the same number. This sort of error can cause the most serious type of confusion and delay in the laundry operation. The most prevalent structure in marking and stapling machines for providing a number to be stamped on the laundry tag comprises a set of rotatable wheels called type segment wheels, each having a series of numbers on the periphery thereof as well as a handle manipulable by the operator to rotate the wheel to register any desired peripheral number with the laundry tag marking position. Thus, by proper adjustment of the type segment wheel handles, the operator may set up any desired number for a given batch of laundry. His primary duty consists in resetting the type segment wheels to a new number with each batch to provide the proper identification therefor.

Universally, with this type of machine, there is provided or may easily be provided a clip board platform or its equivalent mounted on the casing of the marking and stapling machine on which the operator places and clips the laundry list for a given laundry batch. With every new batch, the old list is unclipped and removed from the platform and a new list is placed thereon and clipped thereto. This operation is necessary for the machine operator to check off the items of the batch against the list and there is no problem of the operator not removing and replacing the list with each new batch. It should be noted, therefore, that the operator necessarily operates the clip on a clip board platform after each batch of laundry is processed with his marking and stapling machine.

Therefore, an object of the present invention is to provide means for a power operated marking and stapling machine for attaching laundry tags to laundry which will insure that the operator will have to set a new number thereon after the marking and stapling of tags to a given batch of laundry to properly identify the following batch of laundry, thereby obviating the possibility of confusion between the batches.

Another object of the present invention is to provide means operable in a power operated marking and stapling machine employing rotatable type segment wheels to set the number to be marked on the tags for a given laundry batch whereby the machine is made inoperable after each laundry batch until the operator resets the type segment wheels for a new number, thereby obviating the possibility of mismarking a purality of different laundry batches with a single number.

Still another object of the present invention is to provide means operable by depression of the clip on the clip board platform of a power operated marking and stapling machine employing rotatable type segment wheels to set the number to be marked on the tags for a given laundry batch whereby the machine is rendered inoperable after each laundry batch until the operator resets the type segment wheels for a new number thereby preventing mismarking a plurality of different laundry batches with a single number.

Other and further objects of the present invention will appear in the course of the following description thereof.

In the drawings, which form a part of the instant specification and are to be read in conjunction therewith, an embodiment of the invention is shown and, in the various views, like numerals are employed to indicate like parts.

Fig. 1 is a three-quarter perspective view with parts in section of a power operated laundry tag marking and stapling machine having a clip board laundry list platform and the inventive apparatus for preventing repetitive misnumbering of laundry tags mounted thereon.

Fig. 2 is a side sectional view of the machine of Fig. 1 with all parts omitted except the number setting type segment wheel assembly, the clip board platform assembly, and the inventive shut off apparatus.

Fig. 3 is an enlarged detail of the lower right hand corner of Fig. 2.

Fig. 4 is a view taken along the lines 4—4 of Fig. 2 in the direction of the arrows.

The invention comprises an apparatus providing an automatic power shut off and required type segment wheel resetting in a power driven laundry tag marking and stapling machine. The inventive apparatus is adaptable to any power operated marking and stapling machine which employs manually set type segment wheels to designate the laundry tag marking or number and has a clip board platform or its equivalent mounted thereon. As examples of such machines are the Dual-Duty Tag-O-Electric Marking and Stapling Machines, Series 2B and S3, manufactured by the Textile Marking Machine Company, Inc., of 246 Walton Street, Syracuse 2, New York. These statements are intended as illustrative and are not to be construed in a limiting sense. Such a typical power operated marking and stapling machine is shown in Fig. 1.

Referring to the drawings and, more particularly, to Fig. 1, the numeral 10 designates the housing of a conventional power operated marking and stapling machine for marking laundry tags with a number and stapling them to laundry items for identification thereof. The internal structure and operating parts of this machine will be described only insofar as they relate to the present invention, as such assembly is conventional and well known to the art. A roll of marking tape 11 is mounted

on post 12 and is fed around rollers 13 and 14 and positioner 15 in front of marking head 16 and then stapling head 17 where sections of tape 11 are numbered and marked and then stapled to a piece of laundry which is inserted in front of stapling head 17. The front portion if the upper housing is cut away to show the type segment wheel assembly which will be described in greater detail relative the other figures. Mounted on housing 10 is clip board platform 18 having clip 19 and laundry list receiving box 20 thereon. Bolts 21 and 22 engaging flanges 23 and 24 (Fig. 2) support platform 18 and box 20 respectively.

Fig. 2 shows the type segment wheel system (only the outside type segment wheel 32 is illustrated for simplicity) from the side view. Type segment support frame 25 has type segment shaft 26 mounted thereon. Type aligner frame 27 has type aligner pawls 28 mounted on post 29 thereon. Type segment wheel 30 has type carrying arc 31 and type arc 32. Type carrying arc 31 is conventionally divided into four sections, blank to 8, 9 to F, G to Q, and R to Z, and conventionally has correspondingly marked 18-point type bars thereon. Type aligning arc 32 has detents 33 thereon to engage studs 34 on pawls 28 thereby permitting fixing of the angular position of type segment wheels 30. Springs 34*a*, attaching pawls 28 to frame 25, tend to force studs 34 against detents 33. Handles 35 are attached to the type carrying arc 31 next the blank marking and serve to permit the operator to manually adjust the type segment wheels to the desired letter or number combinations. Handles 35 extend through slots in housing (not shown in Fig. 1 because of the cutaway portion of the housing). The slots are marked to permit proper adjustment of the type bars relative the marking head 16. Fig. 1 shows three of the four type bar handles positioned in the blank position with the outside handle 35 near said blank position. The above described structure is standard with these types of machines.

The inventive apparatus consists of means cooperating between a clip 19 on the clip board platform 18 and the outside type segment wheels 30 whereby depression of the clip frees the type segment wheel from its given set position; means operable on release of said outside type segment wheel to return it to its blank position, and means operable by return of the said type segment wheel to its blank position to render the marking and stapling mechanisms inoperable until said wheel is reset from said blank position.

The means cooperating between the clip 19 and the type segment wheel to free said wheel from its set position comprise a rod 36 having its upper end abutting clip 19 and its lower end connected to arm 37 mounted on the outside of casing 10 by bolt 38. Arm 37 has cam 39 at the opposite end thereof. Outer type segment pawl 28 has extension 40 welded thereto. Horizontal rod 41 is inserted completely through opposite sides of the back portion of casing 10 relative extension 40 (see Figs. 2 and 4) with one end in a relatively snug fitting hole (not shown) and the other end fitting into elongated slot 42 (slot 42 may be in either side of casing 10). Pins 43 and 44 position the confined end of rod 41 relative the casing 10. Cam 39 engages rod 41 and upon depression of clip 19 releases stud 34 from detent 33 as illustrated in Fig. 3.

The means operable on release of said type segment wheel to return it to its blank position comprises a three turn spring 45 which is coiled around the segment wheel axle 26 and has one end connected to the type wheel 30 and the other connected to the axle carrier frame 25. Adjacent the type segment wheel handle 35 a weight 46 is bolted to the wheel spoke to add weight to the type segment side thereof. The purpose of the weight 46 is to eliminate bounce caused by the spring 45 returning the wheel 30 to blank position when the pawl 28 is released.

The means operable to render the marking and stapling mechanisms inoperable (shut off power to the power driven parts of the machine if said machine is power driven) on return of the outer type segment wheel 30 to its base position comprise a microswitch 47 having trip 48 wired into the input power circuit of the marking and stapling machine so that activation of the switch 47 breaks said conventional power circuit and release thereof remakes the said circuit. The switch 47 may be connected into any desired effective part of the circuit. Preferably, the entire power supply to the machine may be shut off or as a variation merely the printing and power stapler solenoids deenergized (if the machine is so equipped).

It should be understood that the marking head 16 and stapling head 17 are moved by conventional electromagnet drives—that is, making the power connection to an electro-magnet draws either or both of the heads 16 and 17 forwardly to mark and/or staple as desired. Breaking the power connection to the electro-magnet permits the heads to return to the rest positions, as shown in Fig. 1. If switch 47 is wired into the power supply line to the electro-magnet(s) (not shown) when the switch 47 is open (0 position of the last type segment wheel) the power circuit of the electro-magnet is disarmed and the marking and stapling operation cannot occur. If the switch is closed (any other wheel position) the operation can occur.

If switch 47 is put into the main power supply to all the parts of the machine, opening it (0 position of the wheel) shuts off the machine entirely and closing it (any other wheel position) restarts the machine.

Details of such a circuit are thus not shown, it being understood that any of several such circuits would be adequate to meet the described purpose and it not being intended to limit the disclosure to any particular one. Hook 49 is attached to type segment wheel 30 so it will contact trip 48 when the wheel returns to blank position. If the marking and stapling mechanisms are hand driven, means should be attached to the type segment wheel to disarm such hand driving means on return to zero.

In operation, the listing ticket is placed under clip 19 on platform 19 so that the operator can list all the articles in a laundry bundle. The operator sets the machine to the desired lot and bundle number and, after listing all articles, then attaches tag identifications to said articles by means of the marking and stapling machine. Upon completion of the bundle, the operator removes the listing ticket by depressing the clip 19. Through the linkage of rod 36, arm 37 and horizontal rod 41, the type segment wheel pawl 28 is released and through spring tension and weight, the outer type segment wheel is returned to blank position. This return causes hook 49 to trip microswitch 47, thus de-energizing the operation of the machine. In order to re-energize the machine, the operator has only to set the machine to the next bundle number by moving the outer type segment wheel from its blank position.

From the foregoing it will be seen that this invention is one well adapted to attain all of the ends and objects hereinabove set forth together with other advantages which are obvious and which are inherent to the structure.

It will be understood that certain features and subcombinations are of utility and may be employed without reference to other features and subcombinations. This is contemplated by and is within the scope of the claims.

As many possible embodiments may be made of the invention without departing from the scope thereof, it is to be understood that all matter hereinabove set forth or shown in the accompanying drawing is to be interpreted as illustrative and not in a limiting sense.

Having thus described my invention, I claim:

1. In a marking and stapling machine for laundry tags of the type employing hand set type segment wheels to register a number relative a marking head and marking

zone, said wheels having each a blank position and a plurality of number indicating positions, said machine having marking and stapling heads to mark numbers on laundry tags and staple said tags to laundry pieces, said machine also having a clip board platform with a clip mounted on the frame thereof; the combination of means cooperating between the clip on the clip board platform and one type segment wheel whereby depression of the clip frees the type segment wheel from its marking position, means operable on release of said type segment wheel to return it to its blank position and means operable by the return of said type segment wheel to its blank position to render the marking and stapling mechanisms inoperable until said wheel is reset from said blank position.

2. A machine as in claim 1 wherein the machine and the marking and stapling heads are power operated.

3. In a power operated marking and stapling machine of the type employing hand set type segment wheels to register a number relative a marking head and a marking zone, said wheels having each a blank position and a plurality of number indicating positions, said machine having power operated marking and stapling heads to mark numbers on laundry tags and staple said tags to laundry pieces and said machine also having a clip board platform with a clip mounted on the frame thereof; the combination of means cooperating between the clip on the clip board platform and one type segment wheel whereby depression of the clip frees the type segment wheel from its marking position, means operable on release of said type segment wheel to return it to its blank position and means operable by the return of said type segment wheel to its blank position to shut off the power to at least some of the power driven parts of the machine until said type segment wheel is reset from said blank position.

4. In a marking and stapling machine of the type employing hand set type segment wheels to register a number relative a marking head and a marking zone, said wheels having each a blank position and a plurality of number indicating positions, type segment wheel pawls engageable with the peripheries of said wheels to hold them in a set position, and disengageable therewith to permit resetting thereof, said machine having marking and stapling heads to mark numbers on laundry tags and staple said tags to said laundry pieces, said machine also having a clip board platform with a clip mounted on the frame thereof; the combination of means cooperating between the clip on the clip board platform and one type segment wheel thereby depression of the clip frees the type segment wheel from its marking position, said means cooperating between the clip and the type segment wheel comprising a mechanical attachment between the clip and the type segment wheel pawl of one of the type segment wheels whereby depression of said clip causes disengagement of the pawl from the periphery of the wheel, means operable on release of said type segment wheel to return it to its blank position and means operable by the return of said type segment wheel to its blank position to render the marking and stapling mechanisms inoperable until said wheel is reset from said blank position.

5. Apparatus as in claim 3 wherein the means operable on release of said type segment wheel to return it to its base position comprises resilient means cooperating between the type segment wheel frame and the type segment wheel constantly urging the selected type segment wheel towards its base position.

6. Apparatus as in claim 3 wherein the machine and the marking and stapling heads are power operated and said means operable to render the marking and stapling mechanisms inoperable by return of the selected type segment wheel to its blank position comprises a switch wired into the power circuit and means on said selected type segment wheel to activate said switch to cut off the power supply to at least the marking and stapling heads in the blank position of the wheel and to restore the power supply when said wheel is out of its blank position.

References Cited in the file of this patent

UNITED STATES PATENTS

2,439,679	Silverman	Apr. 13, 1948
2,528,740	Carothers et al.	Nov. 7, 1950
2,672,810	Keuper	Mar. 23, 1954