US00D762754S

(12) United States Design Patent

Kita

(10) Patent No.: US D762,754 S
(45) Date of Patent: ** Aug. 2, 2016

(54) **CONTROLLER FOR DESOLDERING TOOL**

(71) Applicant: **Hakko Corporation**, Osaka-shi, Osaka (JP)

(72) Inventor: **Toshiyuki Kita**, Osaka (JP)

(73) Assignee: **Hakko Corporation**, Osaka-shi, Osaka (JP)

(**) Term: **15 Years**

(21) Appl. No.: **29/529,638**

(22) Filed: **Jun. 9, 2015**

(30) **Foreign Application Priority Data**

Dec. 17, 2014 (JP) D2014-028108

(51) **LOC (10) Cl.** **15-09**

(52) **U.S. Cl.**
USPC **D15/144.2**

(58) **Field of Classification Search**
USPC D8/29.1, 29.2, 30; D10/78; D14/126; D15/122, 144, 144.1, 144.2
See application file for complete search history.

(56) **References Cited**

U.S. PATENT DOCUMENTS

4,418,268	A	*	11/1983	Munshaw	B23K 3/027 219/240
D274,819	S	*	7/1984	Bouman	D15/144
D274,882	S	*	7/1984	Rittmann	D15/144
D398,016	S	*	9/1998	Neef	D15/144.2
D424,077	S	*	5/2000	Abed	D15/144
D428,427	S	*	7/2000	Neef	D15/144.2
D490,448	S	*	5/2004	Ishihara	D15/144
D497,527	S	*	10/2004	Masaki	D8/30
D508,930	S	*	8/2005	Crisler, III	D15/144
D527,402	S	*	8/2006	Loch	D15/144.2
D530,349	S	*	10/2006	Ishihara	D15/144.2
D576,459	S	*	9/2008	Mochizuki	D8/30
D620,328	S	*	7/2010	Masaki	D8/30
D656,525	S	*	3/2012	Mochizuki	D15/144.2
D666,645	S	*	9/2012	Sugiyama	15/30
D703,715	S	*	4/2014	Kita	D15/144
D740,339	S	*	10/2015	Teraoka	D15/144.2
2005/0263512	A1	*	12/2005	Fosbinder	B23K 9/1087 219/132

FOREIGN PATENT DOCUMENTS

KR	D30-0683413	3/2013

* cited by examiner

Primary Examiner — Patricia Palasik
(74) *Attorney, Agent, or Firm* — Squire Patton Boggs (US) LLP

(57) **CLAIM**

The ornamental design for a controller for desoldering tool, as shown and described.

DESCRIPTION

FIG. **1** is a first perspective view of a controller for desoldering tool;
FIG. **2** is a second perspective view thereof;
FIG. **3** is a front view thereof;
FIG. **4** is a left side view thereof;
FIG. **5** is a right side view thereof;
FIG. **6** is a top view thereof; and,
FIG. **7** is a bottom view thereof.

The broken lines in the drawings depict unclaimed environmental subject matter.

The dashed lines in the drawings depict the boundaries of the claimed design and form no part thereof.

1 Claim, 7 Drawing Sheets

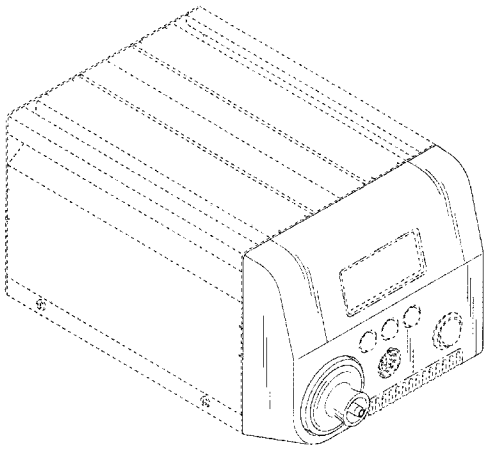

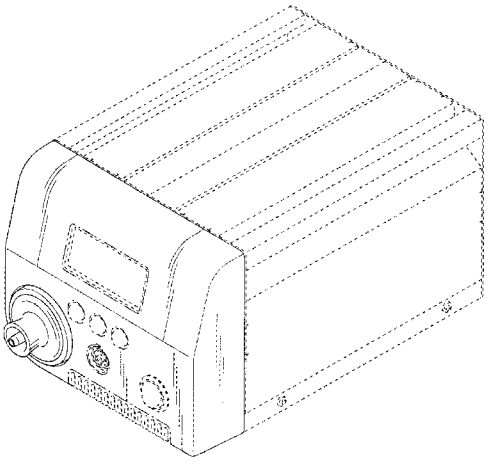

FIG.1

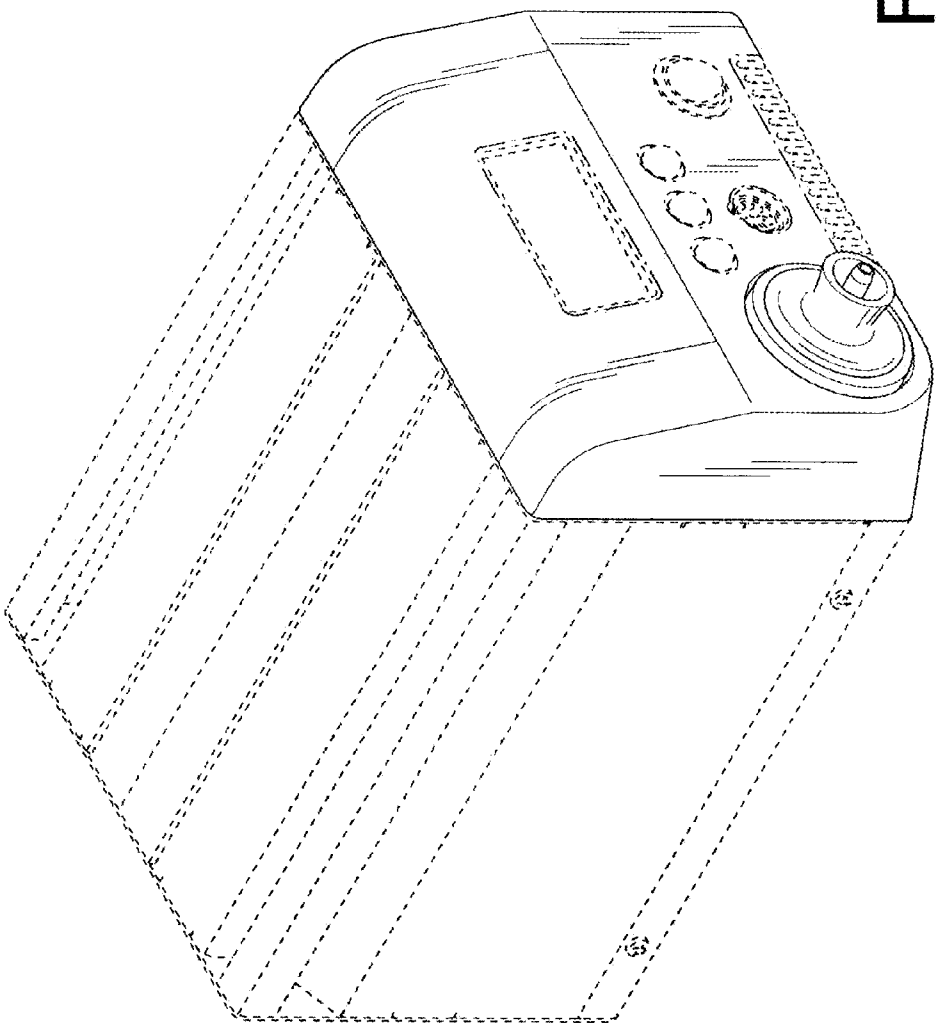

FIG.2

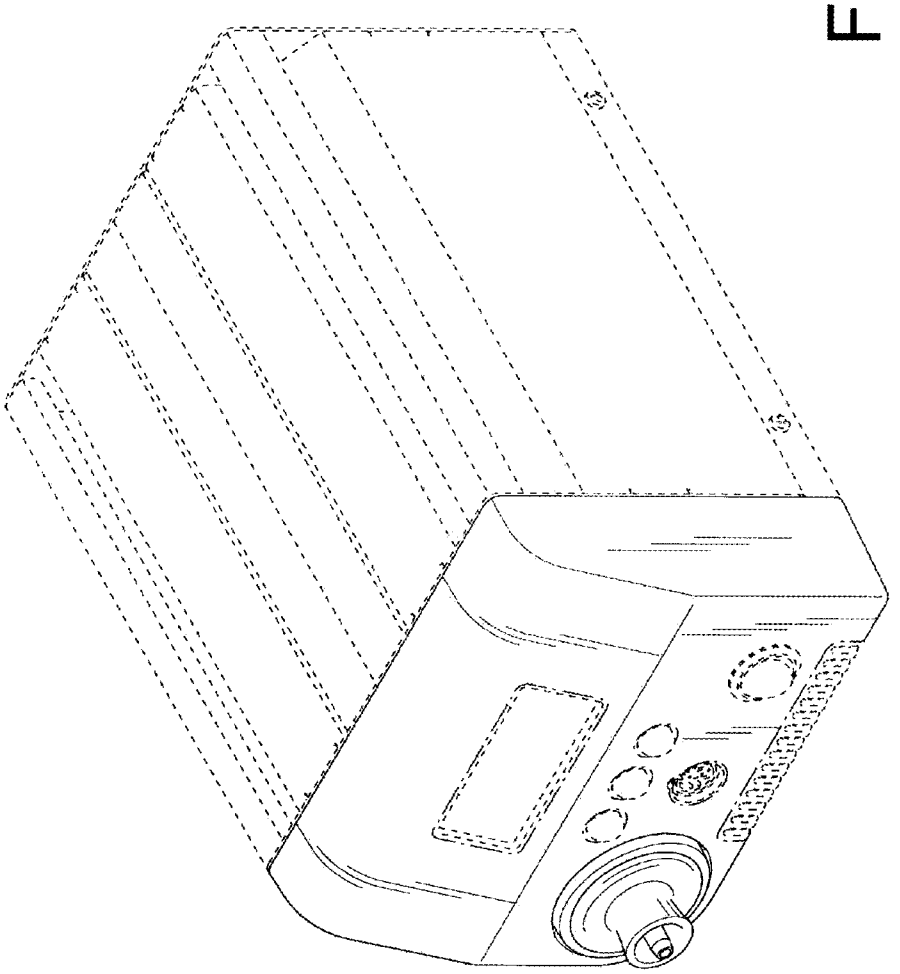

FIG.3

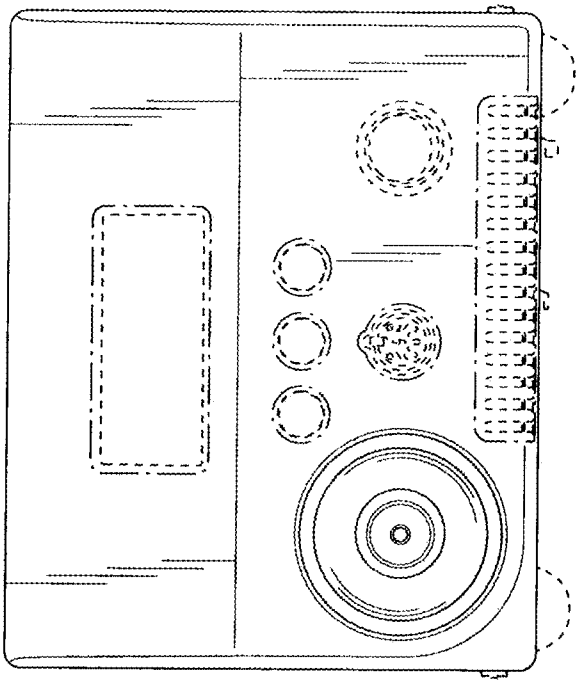

FIG.4

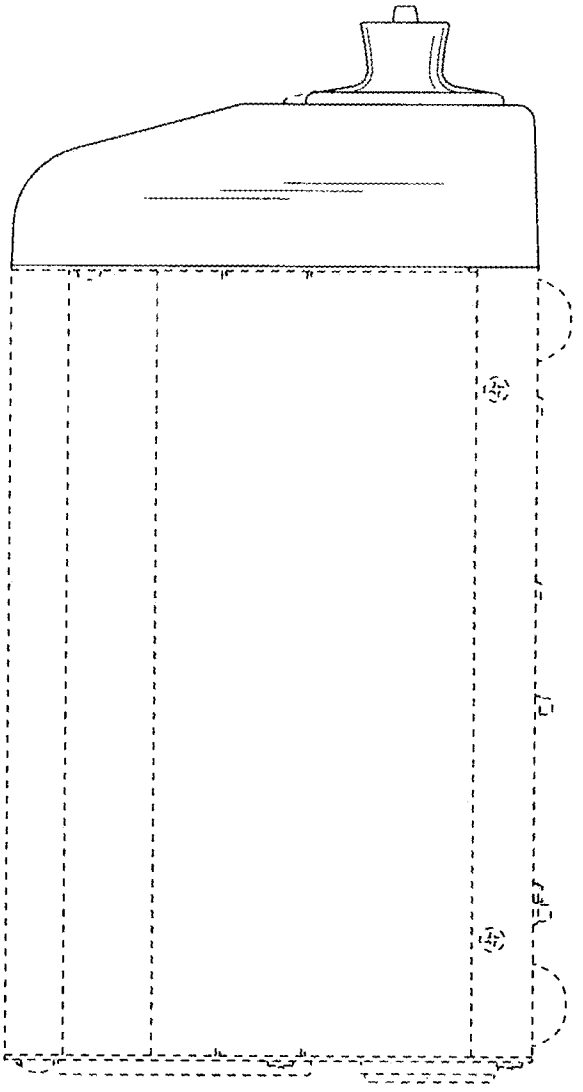

FIG.5

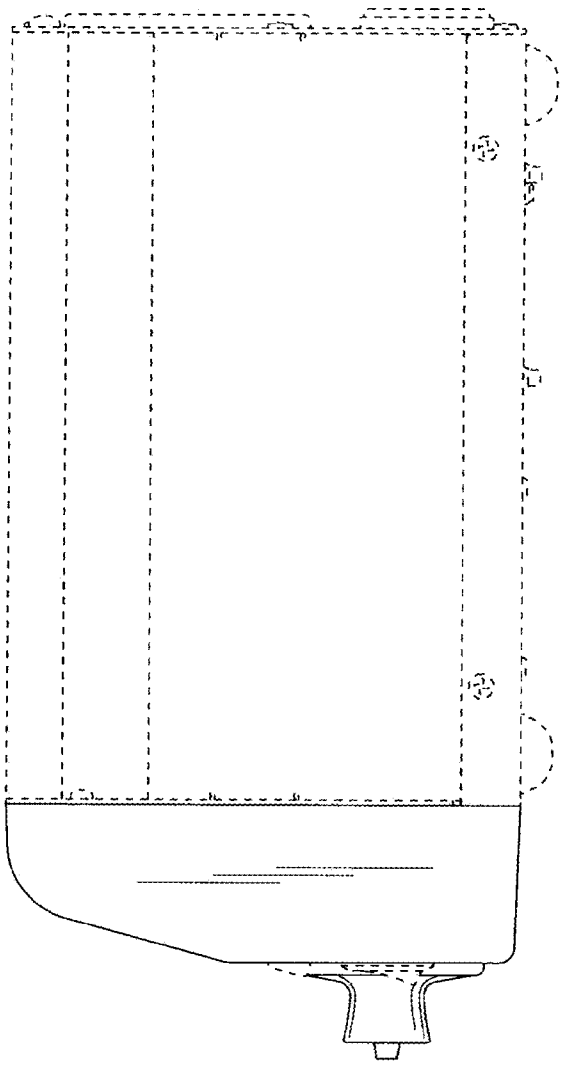

FIG.6

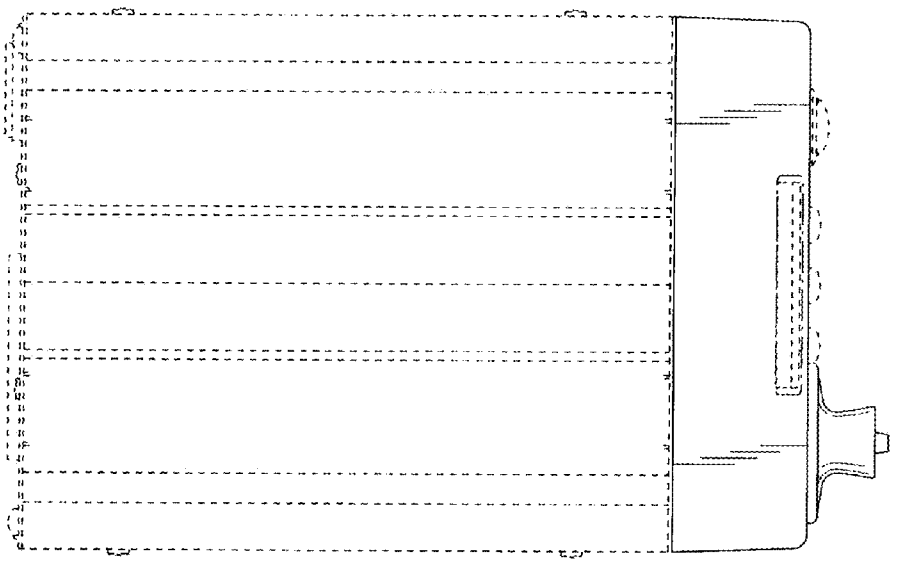

FIG.7

