United States Patent

Huthwaite

[15] **3,662,474**

[45] **May 16, 1972**

[54] **DRYERS AND METHOD OF OPERATION**

[72] Inventor: **John Alan Huthwaite,** Stoke-On-Trent, England

[73] Assignee: **Calmic Engineering Company Limited,** Crewe, Cheshire, England

[22] Filed: **Aug. 24, 1970**

[21] Appl. No.: **66,339**

[30] **Foreign Application Priority Data**

Aug. 27, 1969 Great Britain 42,662/69

[52] **U.S. Cl.** **34/9**

[51] **Int. Cl.** **F26b 3/00**

[58] **Field of Search** .....34/9, 10, 57 A; 159/4 E, DIG. 3

[56] **References Cited**

UNITED STATES PATENTS

2,561,394	7/1951	Marshall	159/4 E
2,193,570	3/1940	Seaton	34/9
3,112,220	11/1963	Heiser, Jr. et al.	159/4 E
3,110,626	11/1963	Larson et al	159/4 E

Primary Examiner—John J. Camby

Attorney—Beveridge & De Grandi

[57] **ABSTRACT**

There is disclosed a method and apparatus for drying materials such as pastes and slurries in which the material is coated onto discrete bodies which are fluidized by an upward stream of gaseous drying agent, the dried material being continuously removed from the fluidized bodies by impacts arising from the motion of the fluidized bodies.

16 Claims, 4 Drawing Figures

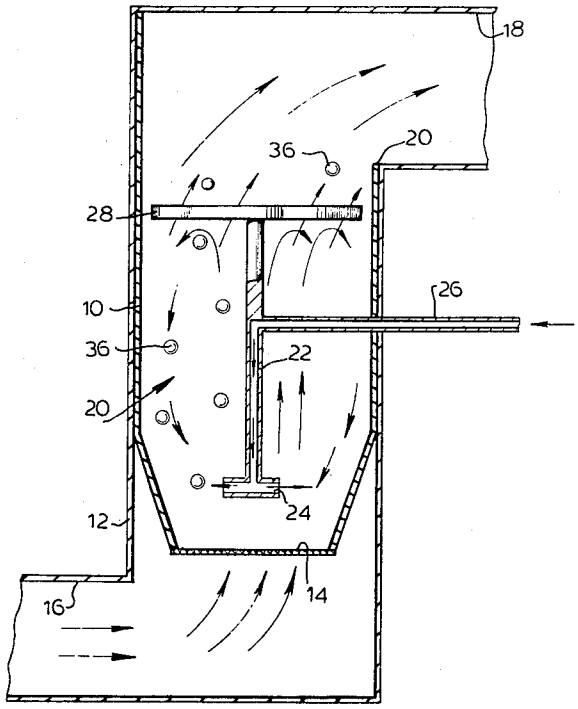

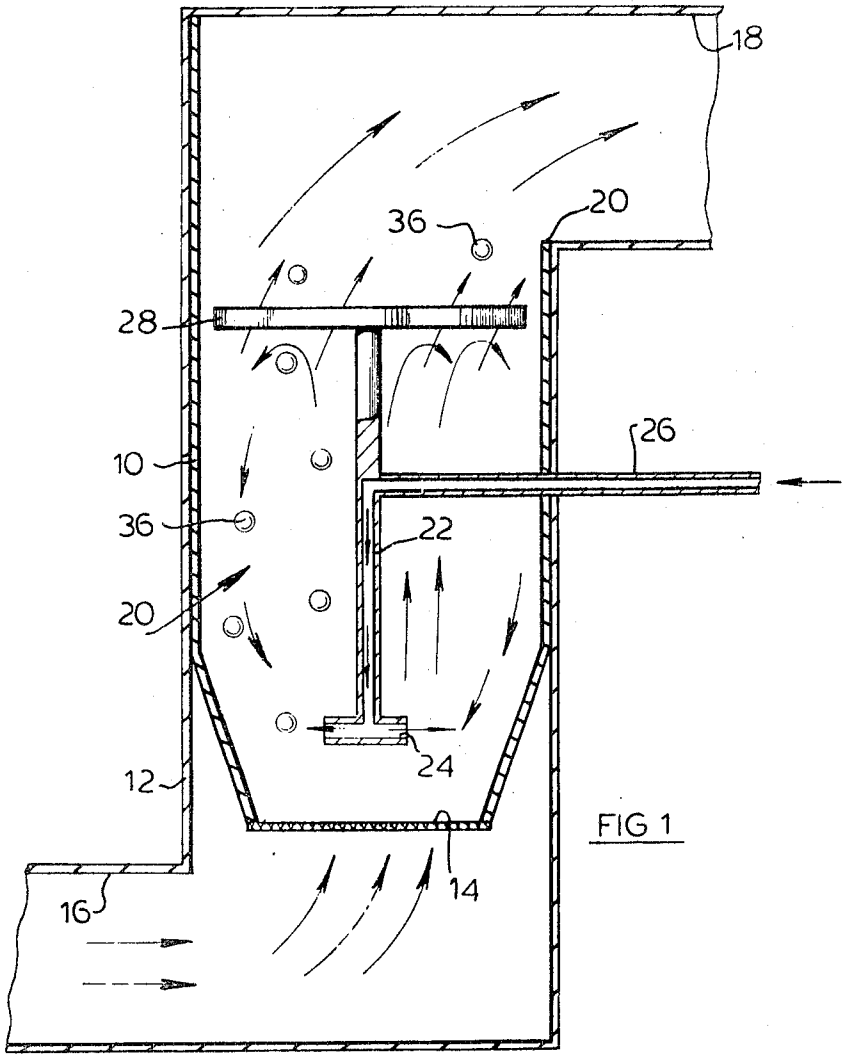

FIG 1

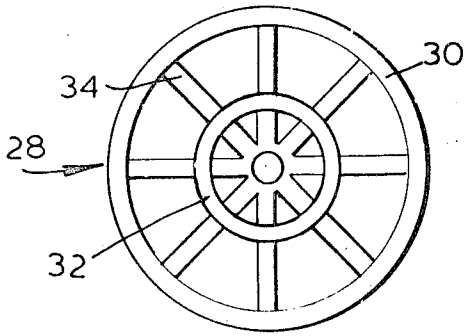

FIG. 2.

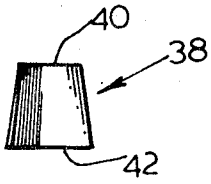

FIG. 3.

INVENTOR:
JOHN ALAN HUTHWAITE
BY
Beveridge + De Grandi
Attorneys

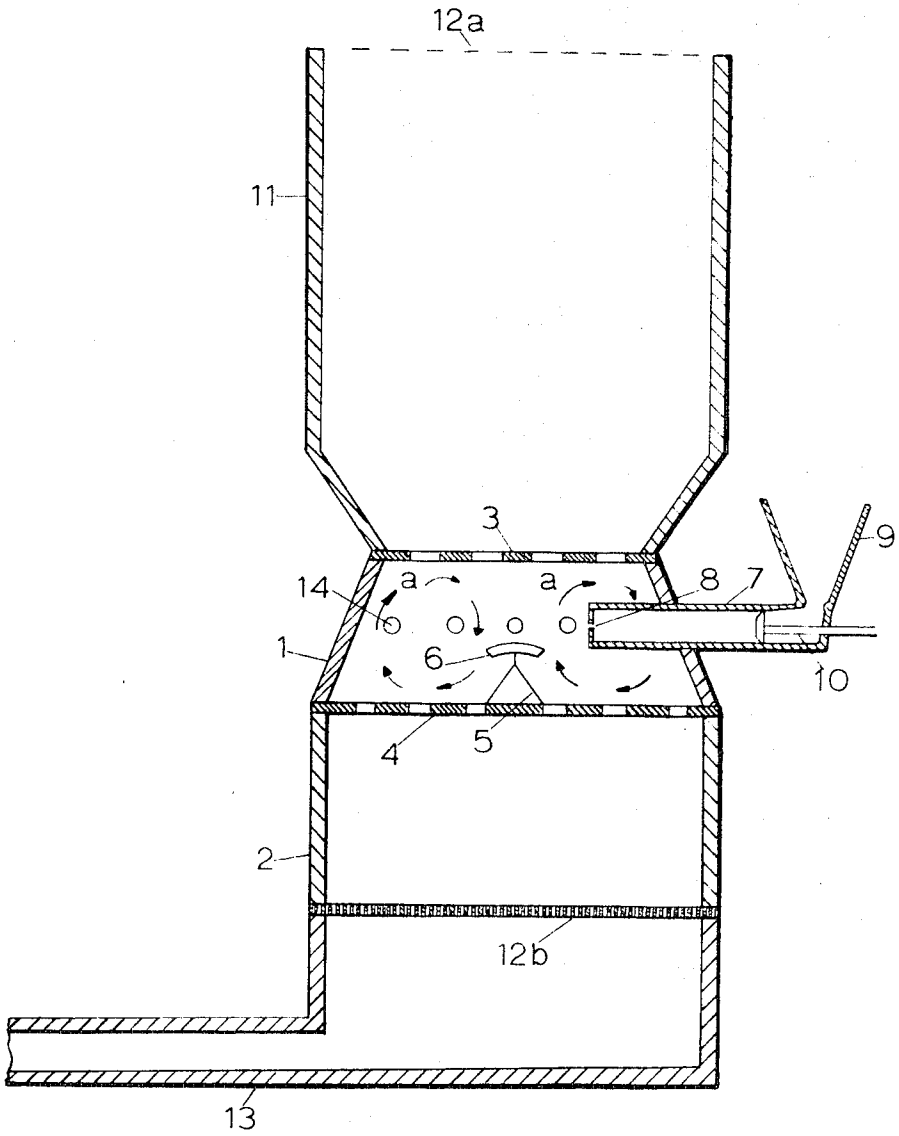

FIG. 4.

INVENTOR:
JOHN ALAN HUTHWAITE
BY
Beveridge + De Grandi
Attorneys

DRYERS AND METHOD OF OPERATION

The invention concerns driers and relates more particularly to an apparatus and method for reducing the liquid content of a flowable material such as a paste or slurry.

The known process of spray drying wherein a flowable material is allowed to fall in the form of a spray down a tower has the disadvantage that, owing to the large size of the tower necessary to provide efficient drying, capital costs are considerable and the process is only economically attractive if large quantities of paste or slurry are to be dried. A spray drying tower also requires a substantial amount of cleaning.

Filtration processes for the reduction of the liquid content of flowable materials are generally time consuming.

It is known from French Pat. No. 1483141 to dry a granular material by passing a stream of air upwardly through a bed of the granular material to fluidize the bed and bring the granules into intimate contact with the air stream. This process is clearly applicable only to granular materials.

It is also known from British Pat. No. 423934 to coat metal or ceramic balls with slurry and to subject the coated balls to heat treatment in a drying chamber, the dried coatings subsequently being separated from the balls. This process requires complex apparatus with the attendant risk of frequent mal-function.

It is an object of the present invention to provide a method and apparatus for drying pastes, slurries and the like which is not subject to the above disadvantage.

According to the present invention, there is provided a method of reducing the liquid content of a flowable material, such as a paste or slurry, in which the material is caused to impinge upon and adhere to discrete bodies which are held in suspension in an upward stream of a gas which serves to effect reduction of liquid content of material adhering to said bodies.

The invention is further described, by way of example, with reference to the accompanying generally diagrammatic drawings, in which:

FIG. 1 is a cross-sectional side elevation of a drying apparatus constructed in accordance with one embodiment of the present invention,

FIG. 2 is a plan view of a detail of FIG. 1,

FIG. 3 shows a cup-shaped body which may be used in the apparatus, and

FIG. 4 is a cross-sectional side elevation of a drying apparatus constructed in accordance with a second embodiment of the invention.

Referring to FIG. 1, a drying chamber **10** is secured within an outer casing **12**. The lower end of the drying chamber **10** takes the form of an inverted frustrum of a cone and is closed by a mesh screen **14**.

An air inlet **16** is formed at the base of the outer casing **12** and an air outlet **18** which registers with an opening **20** at the upper end of the drying chamber **10** is formed at the top of the outer casing **12**.

A feed assembly generally designated **20** is supported within the drying chamber **10** and comprises a vertical feed pipe **22**, a number of circularly spaced outlets **24** and an inlet pipe **26**. Arranged above the pipe **22** is a reticulate member **28** which is shown in elevation in FIG. **1** and in top plan in FIG. **2**. In the illustrated embodiment, the reticulate member **28** comprises two coaxial annular portions **30, 32** and spokes **34**.

A number of light bodies **36** such as hollow balls of plastics material is loosely contained within the chamber **10**. As one alternative to plastics balls, the bodies contained within the chamber **10** may take the form illustrated in FIG. **3** which shows a cup-shaped body **38** which is closed at one end **40** and open at its other end **42**. The use of other light bodies is possible and is included within the scope of the invention. Furthermore, bodies of several different configurations may be used in combination.

In operation of the apparatus depicted in the drawings a prior heated, dry air stream is passed through the inlet **16** and upwardly into the drying chamber **10**, so that the bodies **36** therein become suspended or fluidized. The inverted frustroconical configuration of the lower end of the drying chamber **10** causes the air to rise initially in the center of the chamber **10** and to diffuse gradually over the width of the chamber **10**, the motion of the bodies **36** being constrained by the mesh screen **14** and reticulate member **28**. The apertures between the annular portions **30, 32** and spokes **34** of the reticulate member **28** are sufficiently large to permit the bodies **36** to pass through and then fall back thus preventing an undesirable accumulation of bodies such as would occur if the reticulate member **28** were constructed as a mesh such as **14**. To promote turbulence in the fluidized bodies, one or more additional reticulate members such as **28** may be provided. While the bodies **36** are in motion, paste, slurry, or like material is passed into the chamber **10** from the outlets **24** of the feed assembly **20**. The material impinges on the bodies **36**, adheres thereto and is thereby exposed with a large surface area relative to its thickness, to the heated, dry air stream and is dried. The dried material becomes detached from the bodies **36** and is carried by the air stream through the outlet **18** to be separated from the air stream in a conventional manner. The detachment of the dried paste from the bodies **36** is facilitated by the collisions of the bodies **36** with one another during their motion.

FIG. 4 shows a drying apparatus having a frustoconical housing **1** secured onto a receiving container **2**. The housing **1** is open at its upper and lower ends, the upper open end being covered by a mesh screen **3** and the lower open end being covered by a second mesh screen **4**. In the center of the second mesh screen **4** is situated an upright cone **5**, which is provided with a small cap **6**. A number of plastics balls **14** are loosely contained within the housing **1** between the two mesh screens **3** and **4**.

A paste injector **7** is secured in the side wall of the housing **1**. The injector **7** has a nozzle **8** positioned inside the housing **1** and a hopper **9** positioned outside the housing **1**, and is provided with an internal piston **10**.

An expansion chamber **11** is positioned on the upper end of the housing **1** and is provided with a plastics mesh filter **12*a***.

The receiving container **2** is provided with a fine mesh screen **12*b*** and communicates with an air supply conduit **13**.

In operation of the apparatus depicted in FIG. **4** a prior heated, dry air stream is passed along the conduit **13**, into the receiving container **2** and upwardly into the housing **1**, so that the plastic balls **14** therein become suspended or fluidized. The mesh screens **3** and **4** serve to constrain the motion of the balls **14**. The shape of the housing **1** and the provision of the cone **5** cause the motion of the balls **14** to be in the general direction indicated by the arrows *a*. While the balls **14** are in motion, paste is injected into the housing **1** from the nozzle **8** of the injector **7** by displacement of the piston **10**. The injected paste impinges on the balls **14** and adheres thereto. The paste is thereby exposed with a large surface area relative to its thickness, to the heated, dry air stream and is dried. The dried paste becomes detached from the balls **14** and falls through the mesh screen **4** to be collected in the receiving container **2**. The detachment of the dried paste from the balls **14** is facilitated by the collisions of the balls **14** with one another during their motion. The cap **6** serves to prevent material from accumulating on the cone **5**.

The velocity of the air stream is reduced on passing through the expansion chamber **11** and the filter **12** removes any solid matter from the air stream before it leaves the apparatus, the expansion chamber **11** being of sufficient height to ensure that most of the material entrained in the air stream is able to fall back under the influence of gravity before reaching the filter **12*a***.

In order to permit removal from the apparatus of dried material, a tray or trolley may be positioned beneath the fine mesh screen **12*b*** and be sealed to the apparatus, for example, manually or pneumatically.

Provision may be made, by means, for example, of an area of transparent material comprising part of the side wall of the apparatus, for inspecting internal components of the ap-

paratus and the stream of material issuing from the outlets **24** or nozzle **8**.

It is envisaged that the quantity of liquids other than water, for example acetone and alcohols which may be vaporized at temperatures in the order of substantially 70° to 150° C., be reduced in flowable materials by an apparatus and method according to the invention.

I claim:

1. A method of reducing the liquid content of a flowable material, such as a paste or slurry, in which the material is caused to impinge upon and adhere to discrete bodies held in suspension in an upward stream of a gas which serves to effect reduction of the liquid content of material adhering to said bodies and thereby form on the bodies a layer of dried material which is removed from said bodies by collision between said bodies, said bodies being formed of a material different from said dried material.

2. A method according to claim **1** wherein said gas is heated.

3. An apparatus for reducing the liquid content of a flowable material, such as a paste or slurry, comprising a housing having reticulate top and bottom walls, a plurality of discrete bodies contained within said housing, means to pass a gas stream upwardly through said housing at a flow rate sufficient to cause said bodies to be entrained in and suspended by said gas stream, and means to introduce said flowable material into said housing and cause said flowable material to adhere to said discrete bodies, whereby said gas stream serves to effect reduction of the liquid content of material adhering to said bodies and thereby form on the bodies a layer of dried material which is dislodged from said bodies by mechanical agitation, the bodies being formed of a material different from said dried material.

4. An apparatus according to claim **3** wherein said bodies are hollow shells of plastics material.

5. An apparatus according to claim **3** wherein said bodies are hollow spherical balls.

6. An apparatus according to claim **3** wherein at least one of said top and bottom walls of said housing comprises a mesh screen.

7. An apparatus according to claim **5** wherein said bottom wall comprises a mesh screen and said top wall comprises a reticulate member having apertures with dimensions greater than those of said bodies.

8. An apparatus according to claim **7** wherein said reticulate member has a series of spokes radiating from a central region.

9. An apparatus according to claim **7** wherein said housing is generally cylindrical.

10. An apparatus according to claim **9** wherein said housing has a lower part which takes the form of an inverted frustrum of a cone.

11. An apparatus according to claim **3** wherein said housing is generally frusto-conical.

12. An apparatus according to claim **11** wherein said bottom wall of said housing is provided at the center of its upper surface with an upright conical member.

13. An apparatus according to claim **12** wherein said conical member has a cap.

14. An apparatus according to claim **12** wherein said means to pass a gas stream through said housing includes a relatively fine mesh screen located upstream of said housing.

15. An apparatus according to claim **11** wherein an expansion chamber is located downstream of said housing whereby to lower the velocity of the gas issuing from said housing.

16. An apparatus according to claim **15** wherein a relatively fine mesh filter is located in said expansion chamber.

* * * * *