Feb. 15, 1955 C. A. HUGHES 2,702,077

ADJUSTABLE RECLINING CHAIR

Filed June 17, 1952 2 Sheets-Sheet 1

FIG. 1.

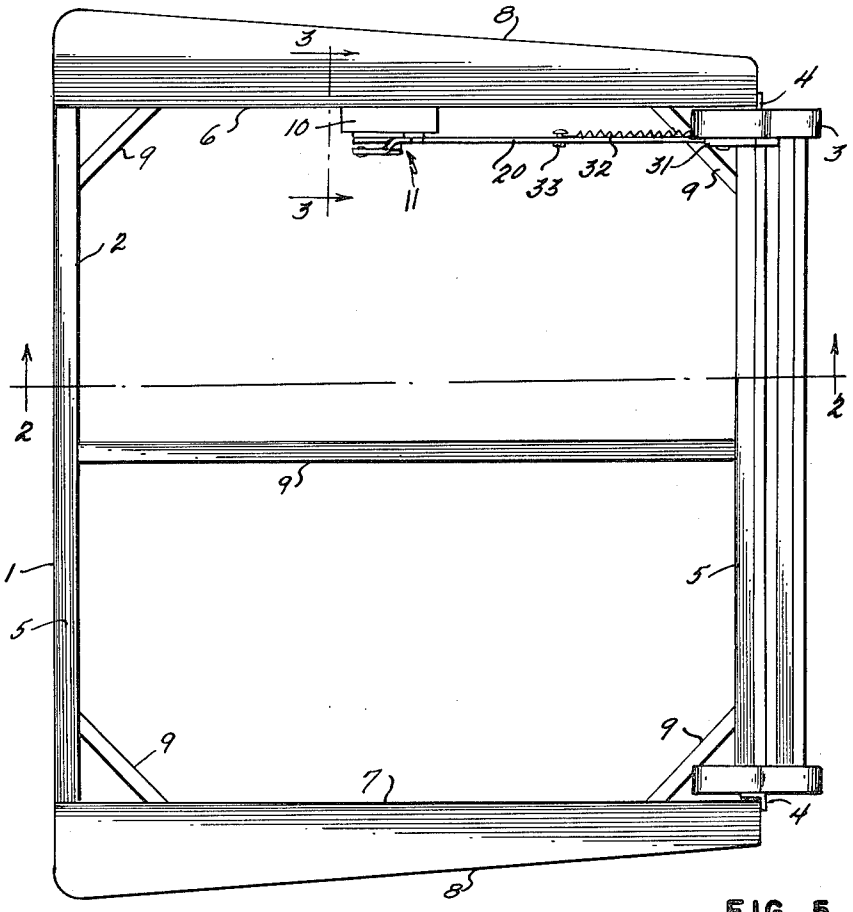

FIG. 5.

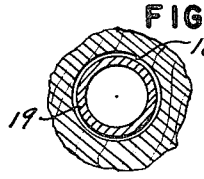

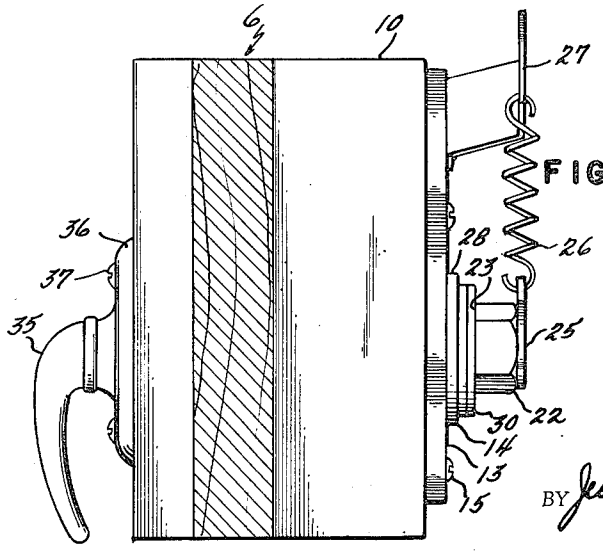

FIG. 3.

FIG. 6.

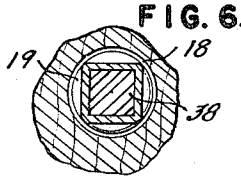

INVENTOR

CLAUDE A. HUGHES

BY Jewett, Mead, Browne & Schuyler

ATTORNEYS

Feb. 15, 1955 C. A. HUGHES 2,702,077

ADJUSTABLE RECLINING CHAIR

Filed June 17, 1952 2 Sheets-Sheet 2

FIG. 2.

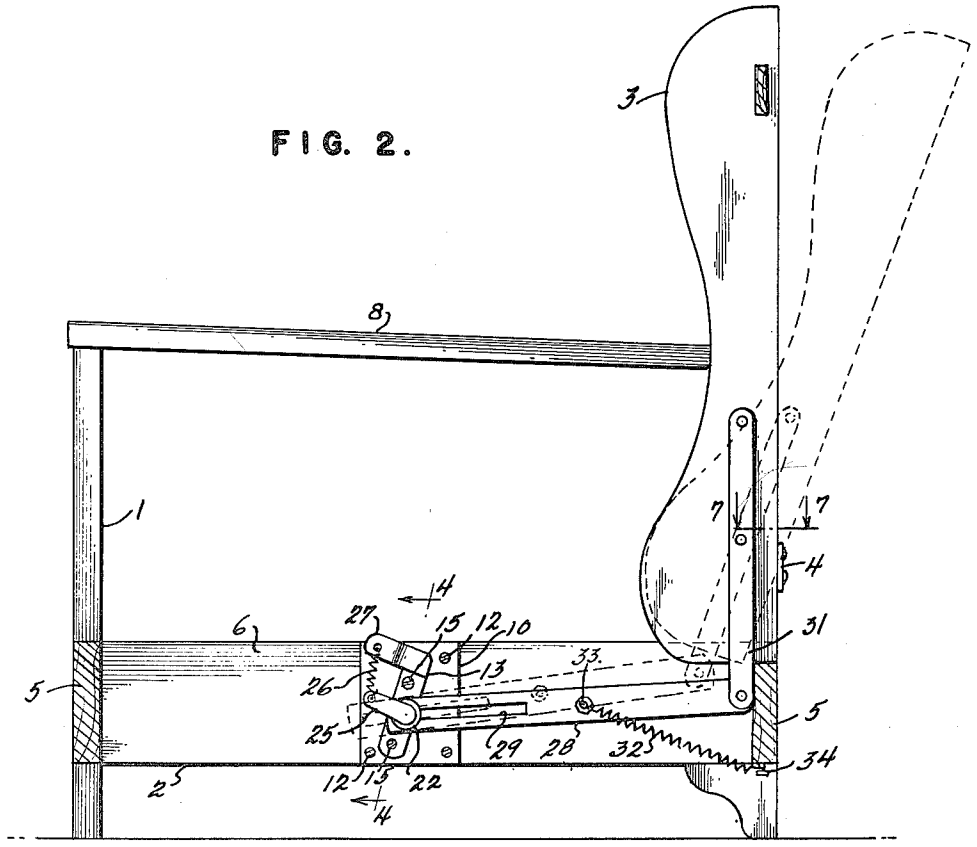

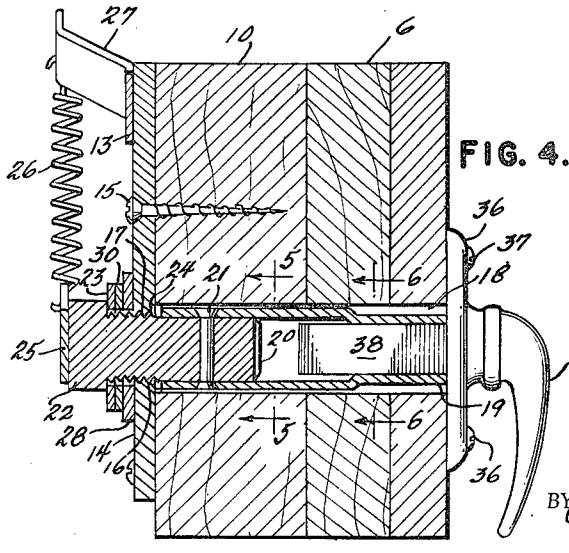

FIG. 4.

FIG. 7.

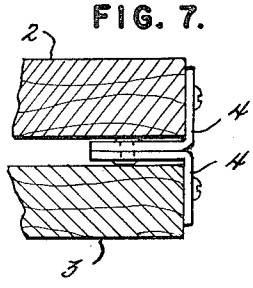

INVENTOR
CLAUDE A. HUGHES

BY Jewett, Mead, Browne & Schuyler

ATTORNEYS

United States Patent Office 2,702,077
Patented Feb. 15, 1955

2,702,077

ADJUSTABLE RECLINING CHAIR

Claude A. Hughes, High Point, N. C.

Application June 17, 1952, Serial No. 293,993

7 Claims. (Cl. 155—161)

This invention relates to reclining chairs having adjustable backs and, more particularly, to a back adjustment apparatus which permits securing the back of such chairs in any desired position.

In reclining chairs of the type having a back adjustment, the adjustment is usually one of two types, either a step by step adjustment permitting positioning the back in any one of a number of possible positions, or a continuous adjustment permitting positioning of the back in any position between two defined limits. This invention concerns improvements in the second type of chair.

Mechanisms for this type of chair usually depend upon frictional engagement between a member attached to the back and a member attached to the seat to secure the back in the desired position, the members being moved out of engagement with each other during the adjustment and into engagement when the desired position is attained. However, such mechanisms have not been entirely satisfactory due to a variety of reasons, such as difficulty in maintaining the frictional engagement sufficiently positive to prevent slippage, difficulty in overcoming the force holding the parts in engagement so as to permit adjustment, and general complexity of structure resulting in increased manufacturing expense and necessitating frequent adjustments and repairs.

An important object of this invention is to provide a back adjustment apparatus which is easy to operate and does not require the application of any great force by the operator.

A further object of the present invention is to provide a back adjustment apparatus of simple construction which is easily manufactured and assembled, and which requires a minimum of adjustment and repair during the life of the chair.

In the attainment of these objects, one feature of my invention resides in an adjustment apparatus having a slotted member disposed between two bearing surfaces and coupled to the back of the chair for movement therewith. The bearing surfaces are normally urged by a biasing force into frictional engagement with the slotted member to clamp it firmly in position. Another feature of my invention concerns the provision of a releasing device with an operating handle easily accessible to a person sitting in the chair for overcoming the biasing force to move the bearing surfaces out of engagement with the slotted member and permitting easy adjustment of the back to a selected position.

These and other objects and features of my invention will become apparent from the following description of the preferred embodiment illustrated in the accompanying drawings in which

Fig. 1 is a plan view of a reclining chair embodying the present invention in its preferred form;

Fig. 2 is a vertical sectional view along the line 2—2 of Fig. 1 showing the back adjustment apparatus mounted in position;

Fig. 3 is a fragmentary sectional view along the line 3—3 of Fig. 1 showing the relation of the operating handle to the clamping members;

Fig. 4 is a fragmentary sectional view along the line 4—4 of Fig. 2 showing the operative parts of the adjustment unit;

Fig. 5 is a fragmentary sectional view along the line 5—5 of Fig. 4;

Fig. 6 is a fragmentary sectional view along the line 6—6 of Fig. 4; and

Fig. 7 is a fragmentary sectional view along the line 7—7 of Fig. 2 showing the method of pivotally joining the back and seat members of the chair.

Referring now to Fig. 1, a reclining chair frame 1 is shown having a seat frame 2 and a back frame 3 pivotally connected thereto to rotate about a horizontal axis by pivot members 4. The seat frame 2 is constructed with front and rear stringers 5, 5 connected by side rails 6 and 7 at each side of the seat frame and has arms 8 and brace members 9 of conventional design which form no part of the present invention.

A spacer block 10 is mounted on the inner face of side rail 6 of the seat frame 2 at a point approximately midway between the front and rear of the seat frame as shown. Mounted on spacer block 10 is a back adjustment apparatus 11 which will be described more fully hereinafter.

Referring now to Figs. 2 and 4, the spacer block 10 is shown mounted in position on the seat frame 2 by means of wood screws 12. The back adjustment apparatus 11 includes a bearing member 13 having a bearing surface 14 mounted on the spacer block 10 by means of screws 15. Bearing member 13 has a hole 16 bored therethrough, the hole having threads 17 on the inner circumference thereof. A hole 18 is bored through the spacer block and seat frame, and the member 13 is so mounted that the hole 16 is co-axial with the hole 18. A hollow shaft 19 passes through the hole 18 and is connected at the end nearest the bearing member 13 to a rod 20 by means of a pin 21.

Rod 20 has a head 22 formed thereon, the head having shoulders which provide a bearing surface 23. Starting at the shoulders and extending for a portion of the length of rod 20 are threads 24 which co-act with threads 17 in bearing member 13 in a manner which will be more fully explained hereinafter. Extending transversely from head 22 is an arm 25. A coil tension spring 26 connects arm 25 with arm 27 extending laterally from bearing member 13 so arm 25, rod 20 and shaft 19 are biased to rotate in a clockwise direction as viewed in Fig. 2.

A link member 28 having a slot 29 is disposed between the bearing surface 23 on the head 22 of rod 20 and the bearing surface 14 on bearing member 13. Rod 20 is disposed within the slot 29. Washers 30 may be arranged between to properly space bearing surface 23 and link member 28. It is to be understood, however, that these washers are not essential to the invention.

Link member 28 is pivotally connected at one end to a bracket 31 which is attached to back frame 3 and extends below pivots 4 as shown. A coil tension spring 32 is connected between link member 28 at point 33 and seat frame 2 at point 34. Inasmuch as member 28 is pivotally connected to bracket 31 below the pivot member 4 the tension of spring 32 will tend to force back member 3 into its upright or vertical position.

A handle 35 is carried by a mounting plate 36 which is secured to the outer face of side rail 6 by screws 37. A square shaft 38 passes inwardly from handle 35 through mounting plate 36 and into the hole 18 in the seat frame. Hollow shaft 19, of square cross section for a portion of its length, mates with shaft 38 as best seen in Fig. 6 so rotation of handle 35 rotates square shaft 38 as well as shaft 19.

In operation, when the person sitting in the chair wishes to adjust the back, he rotates handle 35 in a direction to cause counter-clockwise rotation of shaft 19 and rod 20, as viewed in Fig. 2, against the action of tension spring 26. The threads 24 on rod 20 cooperate with the threads 17 in bearing member 13 to axially shift rod 20 away from bearing member 13 thereby freeing link member 28 from the clamping action of bearing surfaces 23 and 14. Due to the method of connecting shaft 38 to shaft 19, shaft 19 is free to move axially with respect to shaft 38 without causing any axial movement of shaft 38 or handle 35. While holding the handle the operator merely leans against the back until he has achieved the desired angle of inclination, at which time he releases the handle. The action of spring 26 will then rotate rod 20 in a clockwise direction as viewed in Fig. 2, the threads 24 on rod 20 coacting with the threads 17 in bearing member 13 to

axially shift rod 20 and shaft 19 in a direction to bring bearing surfaces 23 and 14 into engagement with link member 28, thereby clamping it firmly in position. While it is necessary that spring member 26 be of sufficient strength to cause a strong clamping action, the leverage afforded by handle 35 is such that little effort is required on the part of the operator to overcome the force of spring 26.

When it is desired to move the back of the chair into its upright position, the same procedure is followed with the exception that the operator does not lean against the back, thereby allowing spring 32 to pull link member 28 toward the rear of the chair, forcing back frame 3 into its upright position.

In order to properly pivot back member 3 with respect to seat frame 2 about a horizontal axis, I have provided hinges of a well-known type which turn about pivots 4 as shown in Fig. 7. It is to be understood that any type of pivoting members of sufficient strength to withstand the various stresses to which the pivot point is subjected may be used and the pivot members 4 are shown in Fig. 7 merely by way of example.

Other changes and modifications may be made to the details of construction without departing from the general spirit and scope of my invention as set forth in the appended claims.

What I claim is:

1. In an adjustable chair having a seat frame, a back frame pivoted on said seat frame to swing about a horizontal axis, and a bracket secured to said back frame and extending below the pivot; a back adjustment apparatus comprising a slotted link member pivotally connected to said bracket below the pivot point of the frames, a bearing member mounted on said seat frame, a shaft extending through the seat frame, the bearing member and the slot in said link member, said shaft having a bearing surface thereon for engagement with said link member, means for axially shifting said bearing surface relative to said bearing member upon rotation of the shaft, a handle coupled to said shaft for rotation thereof, and biasing means tending to rotate said shaft in a direction to shift said bearing surface toward said bearing member to clamp said link member therebetween to hold the back frame in a selected position.

2. In an adjustable chair having a seat frame, a back frame pivoted on said seat frame to swing about a horizontal axis, and a bracket secured to said back frame and extending below the pivot; a back adjustment apparatus comprising a slotted link member pivotally connected to said bracket below the pivot point of the frames, a bearing member having a bearing surface mounted on said seat frame, a shaft extending through the seat frame, the bearing member and the slot in said link member, said shaft having a head forming a bearing surface for engagement with said link member, means for axially shifting said bearing surfaces relative to each other upon relative rotation of the shaft and the bearing member, and biasing means tending to rotate said shaft and said bearing member relative to each other in a direction to clamp the slotted link member between the bearing surfaces and hold the back frame in a selected position.

3. In an adjustable chair having a seat frame, a back frame pivoted on said seat frame to swing about a horizontal axis, and a bracket secured to said back frame and extending below the pivot; a back adjustment apparatus comprising a slotted link member pivotally connected to said bracket below the pivot point of the frames, a bearing member mounted on said seat frame and having a hole bored therethrough, threads formed in the inner surface of said hole, a shaft extending through the seat frame, the bearing member and the slot in said link member, said shaft having a bearing surface thereon for engagement with said link member and having a threaded portion in engagement with the threads in the hole in said bearing member to axially shift the bearing surface on the shaft relative to said bearing member upon rotation of the shaft, a handle coupled to said shaft for rotation thereof, and biasing means tending to rotate said shaft in a direction to shift the bearing surface on said shaft toward said bearing member and into engagement with the slotted link member whereby the link member is clamped between the bearing surfaces to hold the back frame in fixed position.

4. In an adjustable chair having a seat frame, a back frame pivoted on said seat frame to swing about a horizontal axis, and a bracket secured to said back frame and extending below the pivot; a back adjustment apparatus comprising a slotted link member pivotally connected to said bracket below the pivot point of the frames, a bearing member mounted on said seat frame, a bearing surface on said bearing member for engaging one side of said link member, a shaft extending through the seat frame, said shaft having a head thereon forming a bearing surface for engaging the other side of said link member, means for axially shifting said head relative to said bearing member upon rotation of the shaft, an arm extending from said shaft, a tension spring connecting said arm with the seat frame, said spring being arranged in a manner tending to rotate said shaft in a direction to shift said bearing surfaces toward each other and into engagement with said slotted link member to clamp the link member and hold the back frame in fixed position, and a handle coupled to said shaft outside of said seat frame for rotating said shaft against the action of said spring and for releasing said link from said bearing surfaces.

5. In an adjustable chair having a seat frame, a back frame pivoted on said seat frame to swing about a horizontal axis, and a bracket secured to said back frame and extending below the pivot; a back adjustment apparatus comprising a slotted link member pivotally connected to said bracket below the pivot point of the frames, an L-shaped bearing member mounted on said seat frame, a shaft extending through the seat frame, the bearing member and the slot in said link member, said shaft having a head thereon forming a bearing surface for engagement with said link member, means for axially shifting the bearing surface on the shaft relative to said bearing member upon rotation of said shaft, a handle coupled to said shaft for rotation thereof, an arm mounted on the head of the shaft, and a coil spring under tension connecting said arm with said L-shaped bearing member and tending to rotate said shaft in a direction to shift said bearing surface toward said bearing member to clamp said link member therebetween to hold the back frame fixed in a selected position.

6. In an adjustable chair having a seat frame, a back frame pivoted on said seat frame to swing about a horizontal axis, and a bracket secured to said back frame and extending below the pivot; a back adjustment apparatus comprising a slotted link member pivotally connected to said bracket below the pivot point of the frames, an L-shaped bearing member mounted on said seat frame and having a hole bored therethrough, threads formed on the inner surface on the hole, a shaft extending through the seat frame, the bearing member and the slot in said link member, said shaft having a head thereon forming a bearing surface for engagement with said link member and having a threaded portion in engagement with the threaded hole in said bearing member to axially shift the bearing surface on the shaft relative to said bearing member upon rotation of the shaft, a handle coupled to said shaft for rotation thereof, an arm mounted on the head of said shaft, and a coil spring under tension connecting said arm with said L-shaped member and tending to rotate said shaft in a direction to shift said bearing surface toward said bearing member to clamp said link member therebetween to hold the back frame fixed in a selected position.

7. In an adjustable chair having a seat frame, a back frame pivoted on said seat frame to swing about a horizontal axis, and a bracket secured to said back frame at one side thereof and extending below the pivot; a back adjustment apparatus comprising a slotted link member pivotally connected to said bracket below the pivot point of the frames, an L-shaped bearing member mounted on said seat frame and having a hole bored therethrough, threads formed on the inner surface of the hole, a hollow shaft extending through the seat frame and being rotatable therein, a rod having a head thereon forming shoulders, the rod having threads extending from the shoulders for a portion of its length, said rod being insertable through the slotted link member and the L-shaped bearing member into said hollow shaft and being secured thereto, the threads on the rod co-acting with the threaded hole in the L-shaped bearing member to axially shift the shoulders on said rod relative to said bearing member upon rotation of the hollow shaft, a handle for rotating said shaft mounted on the outside of the seat frame, said handle having a shaft portion of rectangular cross-

section attached thereto, said hollow shaft having a portion of rectangular cross-section, said shaft portion and said portion of said hollow shaft being coaxially arranged and relatively axially movable but engageable upon rotary movement whereby rotary motion of said handle is imparted to said hollow shaft, a tension member connecting the slotted link member with the seat frame in a manner to urge the back frame towards its vertical position, an arm mounted on the head of the rod and a coil spring connecting the arm with the L-shaped bearing member and tending to rotate the rod in a direction to

shift the shoulders on said rod toward said bearing member to clamp said link member therebetween to hold the back frame fixed in a selected position.

References Cited in the file of this patent

UNITED STATES PATENTS

809,944	Hanger	Jan. 16, 1906
2,177,408	Haslup	Oct. 24, 1939
2,539,034	Ruby	Jan. 23, 1951
2,596,760	Bryant	May 13, 1952