Nov. 20, 1923. 1,475,029

L. RISK

PROCESS OF APPLYING CEMENT PATCHES

Filed July 27, 1922

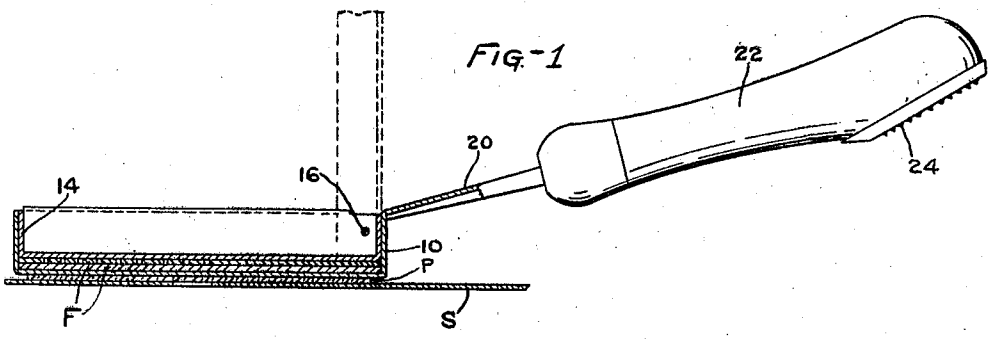

FIG.-1

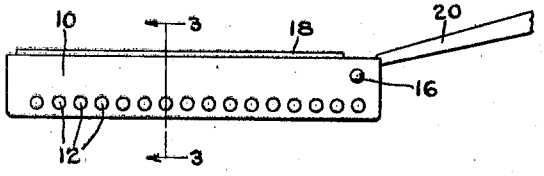

FIG.-2

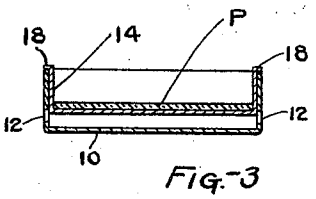

FIG.-3

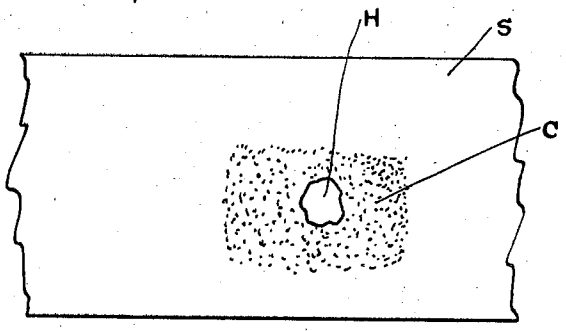

FIG.-4

FIG.-5



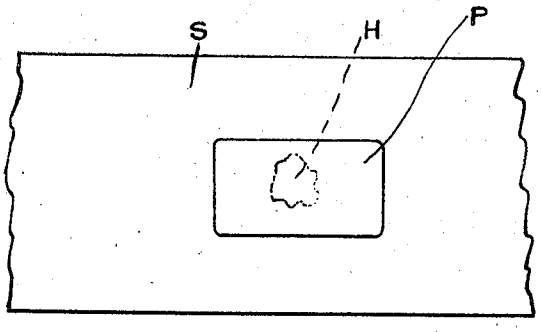

FIG.-6.

FIG.-7

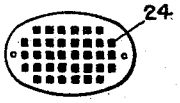

INVENTOR:
LOREN RISK.
BY Whiteley and Ruckman
ATTORNEYS

Patented Nov. 20, 1923. 1,475,029

UNITED STATES PATENT OFFICE.

LOREN RISK, OF MINNEAPOLIS, MINNESOTA.

PROCESS OF APPLYING CEMENT PATCHES.

Application filed July 27, 1922. Serial No. 577,877.

To all whom it may concern:

Be it known that I, LOREN RISK, a citizen of the United States, residing at Minneapolis, in the county of Hennepin and State of Minnesota, have invented certain new and useful Improvements in Processes of Applying Cement Patches, of which the following is a specification.

My invention relates to the process of applying cement patches, and an object is to provide for repairing articles having holes or defective places without the employment of any vulcanizing operation. While intended more particularly for repairing rubber inner tubes of pneumatic tires, my invention may be used for repairing other flexible material such as canvas and leather. Heretofore, it has been customary to apply cement patches to rubber without the employment of any preliminary heating. It requires a considerable length of time for the cement to dry when the repair is made in such manner and the patch does not adhere as firmly as desirable. I have found that when the surface to be repaired is heated just prior to the application of the cement and the patch, much less time is required before the article is ready for use. In fact, with the use of my invention, the article is ready for use as soon as the patch is applied and the patch adheres much more firmly than when applied in the old way.

The full objects and advantages of my invention will appear in connection with the detailed description, and the novel features embodied in my inventive idea will be particularly pointed out in the claims.

In the accompanying drawings which illustrate the application of my invention, Fig. 1 is a view of the device partly in vertical section and partly in side elevation. Fig. 2 is a view in side elevation of the portion of the device which is shown in section in Fig. 1. Fig. 3 is a view in transverse section on the line 3—3 of Fig. 2. Fig. 4 is a plan view showing a surface to which a patch is to be applied. Fig. 5 is a plan view of a patch. Fig. 6 is a view showing the patch applied. Fig. 7 is a bottom plan view of the rear end of the tool handle.

Referring to the construction shown in the drawings, the numeral 10 designates the body portion of a tool which may be used in carrying out my process, this portion being in the form of a receptacle having perforations 12 in its walls, near the bottom thereof. The cover 14 is hinged to the rear of the body portion 10 by a pintle 16. The cover 14 has a bottom member with upstanding walls around its margin, and the side walls are provided with horizontal flanges 18 which limit the extent to which the cover can be pushed into the receptacle 10 as will be apparent from Fig. 3. Secured to the rear of the receptacle is a tank 20, the rear end of which is received in an opening in a handle 22. The rear end of the handle is cut on an incline and provided with a scraper or buffer 24.

In the use of my invention, the cover 14 is placed in open position as shown in dotted lines in Fig. 1 and solid fuel is placed in the receptacle 10. This solid fuel may be in the form of fuses such as disclosed in my prior Patent No. 1,209,206 dated Dec. 19, 1916. As shown in Fig. 1, two of these fuses indicated by the character F may be employed. These fuses after being placed in the receptacle are ignited and the cover is closed, the smoke and gases escaping from the perforations 12. The fuses continue to glow and keep the tool hot for a considerable period of time. The surface to be repaired is cleaned and roughened by the use of the buffer 24 and is then washed over with suitable material such as gasoline or benzine. The surface thus prepared is heated by the use of the tool and then a specially prepared cement is applied to the hot surface of the material which is being repaired and is also preferably applied to the heated surface of the patch. In the drawings, S designates the surface of the article to be repaired, the defect in this case being shown as a hole H. The cement is indicated at C and the patch by the character P. The cement when spread on the heated surface dries almost immediately to a sticky or tacky condition, and the patch is then applied over the place to be repaired. A piece of cloth may be placed over the patch and briskly rubbed with the heated tool. The repair thus made is allowed to cool and the article is ready for immediate use. The patch, previous to the application of the cement thereto, may be heated by placing it in the depression of the cover or if of large size may be heated by rubbing the hot tool over the patch. My invention is of special advantage in cold or damp weather. In the winter time, the material to be patched is cold, stiff and frosty, and requires a long time to dry. By heating the

surface to be repaired with the heating tool, this surface will be dry, warm, and pliable and until the repair is completed, thus causing perfect adhesion of the patch. In damp weather, cement patches will not stick satisfactorily on the damp surface but by the use of the heated tool, the surface to be repaired will be dry and will take the patch at once so that it becomes firmly attached. The cover may be employed as a pan for heating certain kinds of cement. By the use of heat, the pores of the material to be repaired are expanded and the cement is thinned. The result is that the cement penetrates the material more readily, sets immediately and causes a more perfect adhesion of the patch.

I claim:

1. A process for applying cement patches which consists in heating the surface to be repaired, applying cement to the heated surface, and pressing the patch upon the cement-coated surface.

2. A process for applying cement patches which consists in heating the surface to be repaired, applying cement to the heated surface, heating a patch, and pressing the patch upon the cement-coated surface.

3. A process for applying cement patches which consists in heating the surface to be repaired, applying cement to the heated surface, heating a patch, applying cement to the heated patch, and pressing the patch upon the cement-coated surface.

4. A process for applying cement patches which consists in heating the surface to be repaired, applying cement to the heated surface, and pressing a patch upon the cement-coated surface while applying heat.

5. A process for applying cement patches which consists in heating the surface to be repaired, applying cement to the heated surface, placing a patch upon the cement-coated surface, placing a piece of cloth over the patch, and pressing the patch upon the cement-coated surface while applying heat.

In testimony whereof I hereunto affix my signature.

LOREN RISK.