June 14, 1927. 1,632,353

W. C. TODD ET AL.

TRAVELING SPRINKLER

Filed Dec. 31, 1925

Fig. 1.

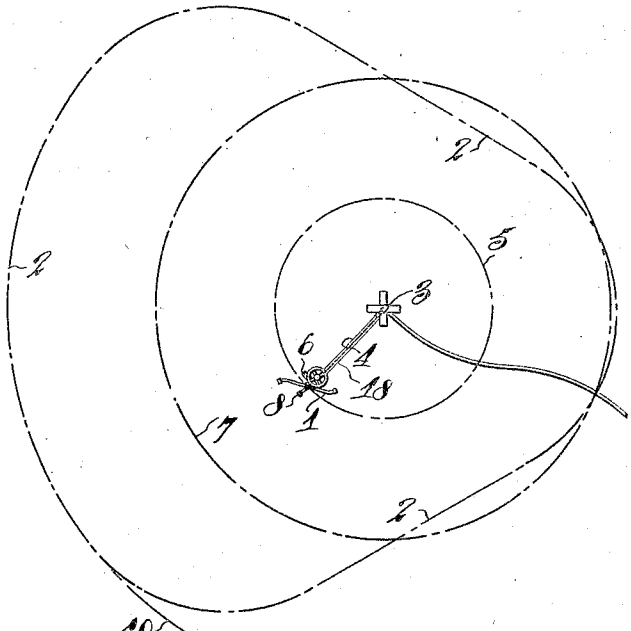

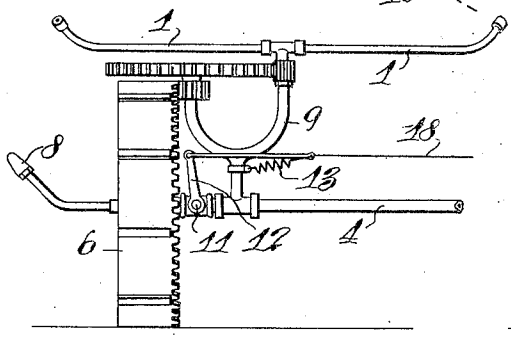

Fig. 2.

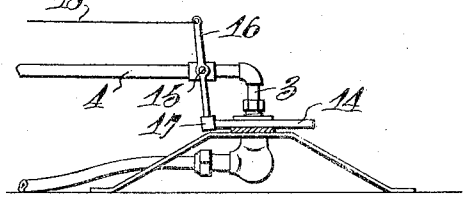

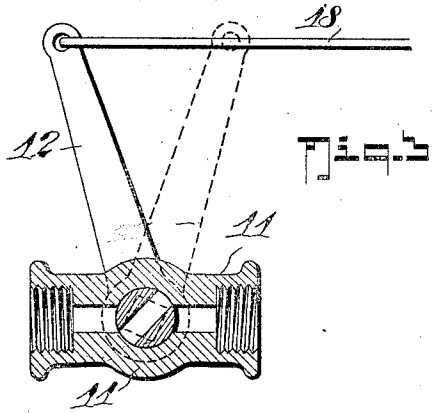

Fig. 3.

Fig. 4.

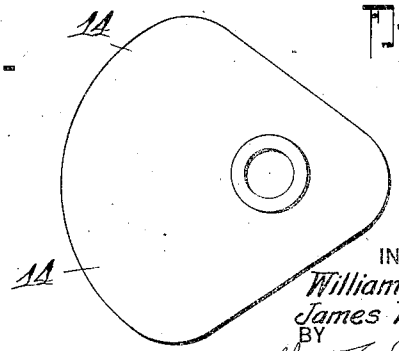

INVENTOR
William C. Todd,
James W. Pomeroy,
BY
Albert E. Drumm
ATTORNEY

Patented June 14, 1927. 1,632,353

UNITED STATES PATENT OFFICE.

WILLIAM C. TODD AND JAMES WILLIAM POMEROY, OF VICTORIA, BRITISH COLUMBIA, CANADA.

TRAVELING SPRINKLER.

Application filed December 31, 1925. Serial No. 78,606.

This invention relates to a water sprinkler of that class wherein a reaction sprinkler head is carried on the free end of a radial pipe which moves around a central pivot through which the water service is delivered, the free end of the radial pipe and its sprinkler head being supported on a driving wheel operated by the rotation of the sprinkler.

As the sprinkler head travels around the circle the area within and without the circle of its travel is effectively sprinkled by this reaction sprinkler head.

To increase the sprinkled area a supplementary jet pipe is directed upward and radially outward from the end of the pipe on which the reaction sprinkler head is mounted.

While with the sprinkling device as described, the sprinkled area is necessarily circular, it is frequently necessary to sprinkle an area which is irregular in outline, to accomplish which the improvement, which is the subject of this application, has been devised.

The means by which this desired result is obtained is fully set forth in the following specification, reference being made to the drawings by which it is accompanied, in which:

Fig. 1 is a plan to a small scale showing the sprinkler as applied to sprinkle an irregularly shaped area.

Fig. 2 is an elevation of the sprinkler to an enlarged scale.

Figure 3 is an enlarged detail cross section of the valve.

Figure 4 is an enlarged plan view of the form plate.

In these drawings the line 2 2 2 indicates the irregular outline of the area which it is required to sprinkle, and 3 the central pipe, served with water by a base pipe or otherwise, about which the radial pipe 4 moves.

On the upwardly turned outer end 9 of this pipe 4 is mounted the reaction sprinkler 1 which, by suitable gearing, drives the wheel 6 which supports the outer end of 4 and carries it around the circular track 5.

The reaction sprinkler 1 thus waters the area on each side of the circle 5 within the limit of the outer circle 7.

To extend this sprinkled area a jet pipe 8 is directed upward and radially outward from the end of the radial pipe 4 to project its spray to a limit indicated by the arc 10. Obviously this limit would be circular unless controlled by the device which is the particular subject of this application.

This control comprises a stop-cock or valve 11 in the pipe 4, beyond the pipe 9 on the plug of which stop-cock is a lever 12 with a spring 13 normally holding the valve in the closed position. On the stand of the central pipe 3 is secured a form plate 14, the outline of which corresponds in miniature with that 2 2 2 of the area to be sprinkled, and on the pipe 4 over the edge of this plate is secured a pivot 15 on which a lever 16 is mounted, having at its lower end a roller 17 to engage the edge of the form plate 14 and at its upper end connected by a wire 18 to the end of the lever 12 of the stop-cock 11 on the jet pipe 8.

In use, the sprinkler is placed with the form plate 14 concentrically within the area 2 2 2. When the water is turned on the radial pipe 4 will be carried slowly round the central pipe 3 and where the outline 2 2 2 lies beyond the circle 7 sprinkled by 1, the lower end of the lever 16 is moved outward and the upper end inward to pull the valve 11 open by the wire 18 against the resistance of its spring 13 which tends to hold it closed, and thereby sprinkle the outlying parts of the area by the jet pipe 8.

Obviously, a separate form plate 14 will be required for each different shape of 2 2 2 which may be of any form—square, triangular or otherwise, so long as its extreme limits fall within the range limits of the jet pipe 8 of the sprinkler.

Having now particularly described our invention, we hereby declare that what we claim as new and desire to be protected in by Letters Patent, is:

In a traveling lawn sprinkler, a central support, a horizontal pipe rotatably mounted at one end on said support, means for delivering water to said end of said pipe, means on said pipe for moving it around the support as an axis, said means including a reaction sprinkler mounted on said pipe, a traction wheel mounted on said pipe and gear connected with said reaction sprinkler, a supplementary jet pipe extending from the outer end of said horizontal pipe, a valve

between said jet pipe and the place where said reaction sprinkler is mounted so as to control water passing through said jet pipe without effecting the flow of water to said reaction sprinkler, a cam plate on said support, a lever pivoted to said horizontal pipe and having an end to cooperate with said cam plate, a rod connecting said lever to said valve, and a spring for holding the lever in cooperative relation to said cam plate and for continuously tending to close said valve.

WILLIAM C. TODD.
JAMES WILLIAM POMEROY.