No. 796,439.

PATENTED AUG. 8, 1905.

C. D. LOVELACE.

TRAP GUN.

APPLICATION FILED OCT. 31, 1904.

2 SHEETS—SHEET 1.

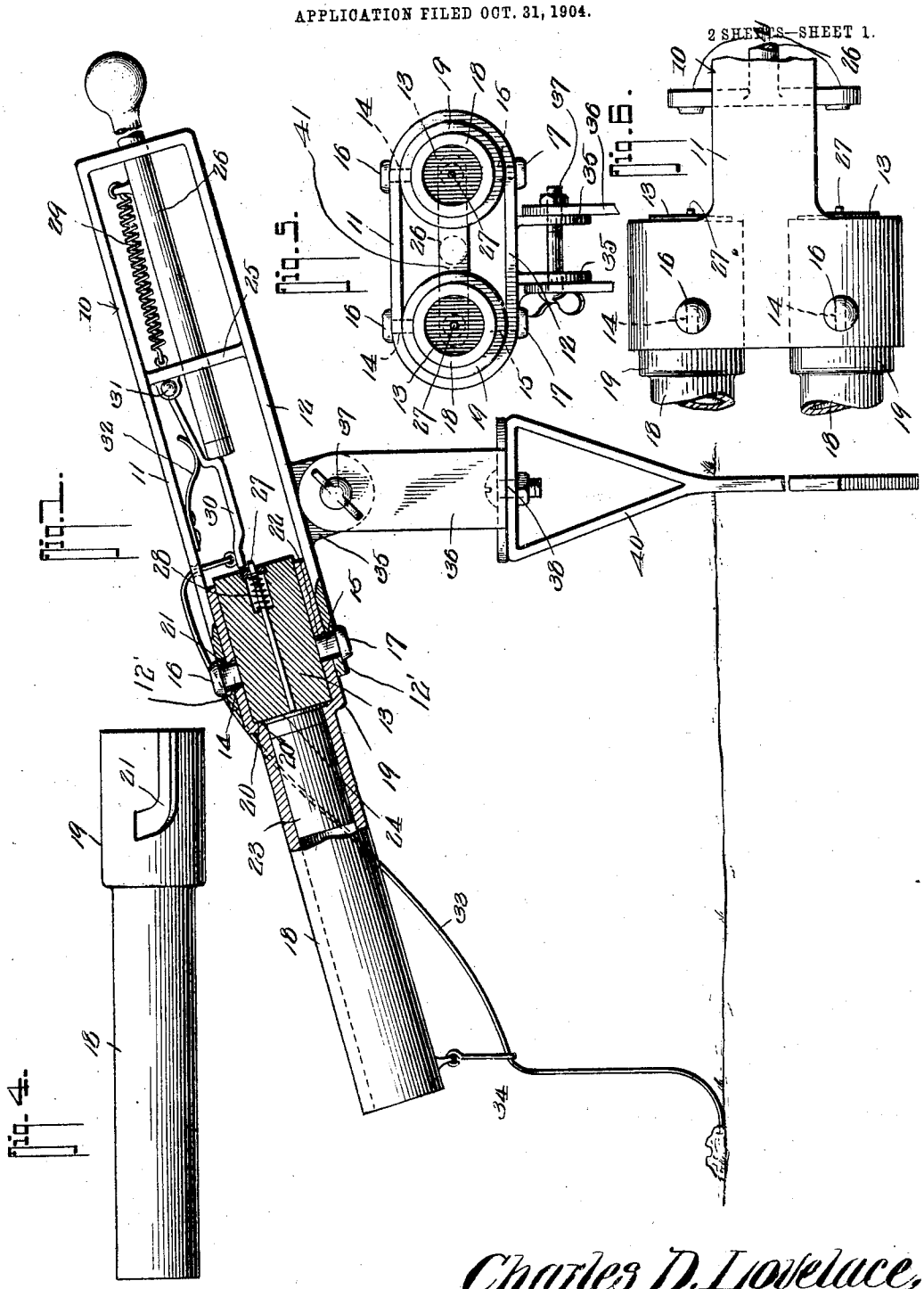

Witnesses

E. H. Stewart

E. H. Woodward

Charles D. Lovelace,
Inventor.

by C. A. Snow & Co.
Attorneys

ANDREW B. GRAHAM CO., PHOTO-LITHOGRAPHERS, WASHINGTON, D. C.

No. 796,439. PATENTED AUG. 8, 1905.

C. D. LOVELACE.

TRAP GUN.

APPLICATION FILED OCT. 31, 1904.

2 SHEETS—SHEET 2.

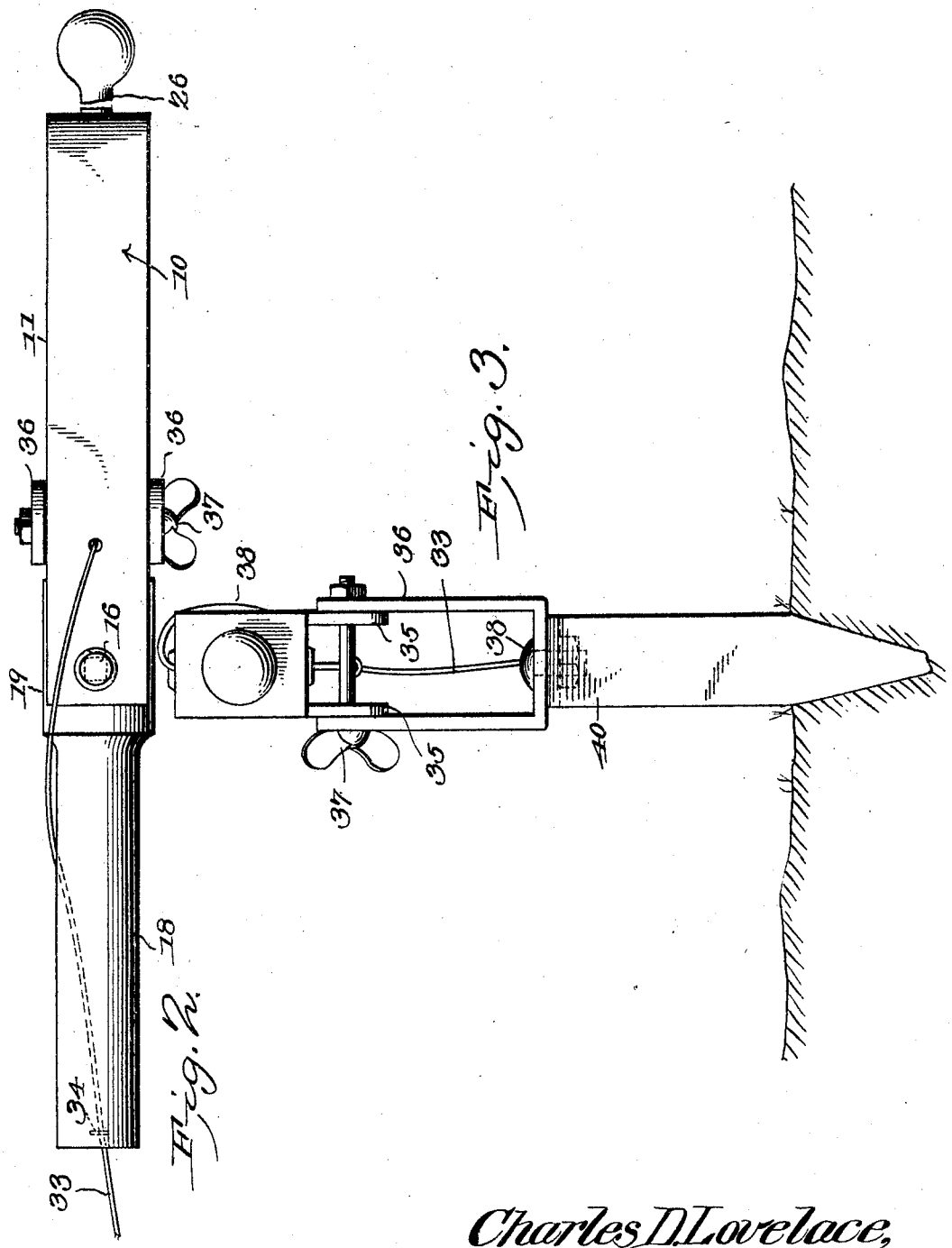

Fig. 2.

Fig. 3.

Witnesses

E. F. Stewart

S. M. Acker

Charles D. Lovelace,
Inventor.

by C. A. Snow & Co
Attorneys

ANDREW B. GRAHAM CO., PHOTO-LITHOGRAPHERS, WASHINGTON, D. C.

UNITED STATES PATENT OFFICE.

CHARLES D. LOVELACE, OF OMAHA, NEBRASKA.

TRAP-GUN.

No. 796,439. Specification of Letters Patent. Patented Aug. 8, 1905.

Application filed October 31, 1904. Serial No. 230,814.

To all whom it may concern:

Be it known that I, CHARLES D. LOVELACE, a citizen of the United States, residing at Omaha, in the county of Douglas and State of Nebraska, have invented a new and useful Trap-Gun, of which the following is a specification.

This invention relates to improvements in trap-guns operative by the action of the animal to be destroyed, and has for its object to simplify and improve the construction and increase the general efficiency and utility of traps of this character.

With these and other objects in view, which will appear as the nature of the invention is better understood, the same consists in certain novel features of construction, as hereinafter fully described and claimed.

In the accompanying drawings, forming a part of this specification, and in which corresponding parts are denoted by like designating characters, is illustrated the preferred form of embodiment of the invention capable of carrying the same into practical operation, it being understood that the invention is not necessarily limited thereto, as various changes in shape, proportion, and general assemblage of parts may be resorted to without departing from the principle of the invention or sacrificing any of the advantages.

In the accompanying drawings, Figure 1 is a side elevation, partially in section, of the improved device. Fig. 2 is a top plan view of the same. Fig. 3 is a rear elevation. Fig. 4 is a plan view of the barrel of the gun portion detached. Fig. 5 is a front elevation illustrating a modified form of the device. Fig. 6 is a detail plan view of Fig. 4.

The improved device comprises an oblong supporting-frame 10, preferably formed of steel or other resilient material and constructed with spaced members 11 and 12, connected at one end and having their free ends provided with oppositely-disposed rectangular apertures 12′.

Disposed between the free ends of the frame members 11 and 12 is a breech-block 13, provided with oppositely-disposed rectangular studs 14 and 15, which extend through the rectangular apertures in the members 11 and 12 and terminate in laterally-extending heads 16 17, adapted to limit the outward movement of the side members.

The barrel member 18 is formed with an enlarged butt-end 19, whereby internal shoulders 20 and 20′ are formed, the enlarged end of said barrel being adapted to engage the members 11 and 12 and the breech-block 13, while the latter bears against the shoulder 20, as shown.

The enlarged end of the barrel 18 is provided with oppositely-disposed bayonet-joints or cam-slots 21, the inner terminals of which are inclined and adapted to receive the studs 14 and 15, thereby forming a bayonet-joint locking means between the barrel and breech-block.

The rectangular form of the studs 14 and 15 prevents any swinging movement between the breech-block and supporting-frame, while at the same time the resiliency of the members 11 and 12 firmly binds the parts together when the barrel is coupled to the breech-block. Then, again, the inclined form of the inner ends of the cam-slots causes the breech-block to be compressed very tightly against the shoulder 20 when the barrel is given a partial rotation to lock the same, as will be obvious.

The cartridge (represented at 23) just fills the bore of the barrel, while the rear rim 24 of cartridge engages the shoulder 20′ and is held in place by the breech-block, which latter is compressed thereon, as before stated. By this arrangement it will be obvious that the barrel can be quickly attached and detached when the trap is to be reset and firmly held in place after being coupled to the breech-block.

The frame 10 is provided with an intermediate transverse web 25 and slidably mounted in coincident openings in said web, and the rear end of the frame 10 is a reciprocatory firing-bolt 26, the latter being actuated by a spring 29 to engage the firing-pin 27. The firing-pin 27 is mounted in the breech-block 13 and is controlled by a suitable spring 28.

A trigger 30 is hinged at 31 within the frame 10 and operated by a spring 32 to hold the bolts 26 in set position. The trigger is provided with a pull-cord 33, leading through a swinging guide-loop 34 to any desired point, and to the end of said cord is secured the bait for the animal. The frame 10 is provided with spaced depending ears 35, to which a standard 36 is coupled by a clamp-bolt 37, the standard in turn being swiveled, as at 38, upon a post 40, adapted to be driven into the ground to support the trap. By this means the supporting-frame carrying the barrel is free to rotate horizontally upon the post 40 and swing vertically upon the bolt 37, so that as the animal seizes the bait and carries it away the

tension on the cord 33 will swing the barrel around and point the muzzle directly at the animal and at the same time release the trigger and cause the load from the gun to strike the animal, as will be readily understood. Thus it makes no material difference where the bait is located, as the action of the animal in attempting to carry off the bait will turn the gun in alinement with the bait and effectually disable the animal after it takes said bait.

In Figs. 3 and 4 a modified form of the structure is shown, wherein two separate and independent barrels are employed having separate and independent breech-blocks and firing-pins, but with one firing-bolt 26, which is broadened at its forward end, as at 41, to reach both firing-pins at once. By this means two charges may be fired at the same time, or a barrel for shot and another for a bullet may be provided to suit the device to the species of animal to be trapped. If the device is to be employed for animals requiring a bullet to trap them, then one barrel is charged with a bullet and the other left empty, and then when the trap is sprung one barrel only will be discharged, as will be obvious, or if a charge of shot only is required the shot-barrel only will be loaded. The barrel always points downward when set, as illustrated in Fig. 1, so that if accidentally discharged the load will be driven into the ground and not in the direction of persons or valuable animals which may be in its path.

It will be noted that the firing mechanism, except the outer end of the firing-bolt 26, is within the frame 10 and the members 11 and 12, so that the tendency of the device to become accidentally discharged is materially lessened.

Having thus described the invention, what is claimed is—

1. The combination with a barrel having one end thereof enlarged and provided with a pair of shoulders one of which is adapted to receive the head of a cartridge, a breech-block fitting within the enlarged end of the barrel and engaging the second shoulder for retaining the cartridge in position, means for detachably connecting the barrel and breech-block, a firing mechanism, and means for releasing the firing mechanism.

2. In a trap-gun, a breech-frame having spaced resilient side members provided with apertures, a breech-block provided with trunnions extending through the apertures in said side members, a barrel having one end thereof enlarged for the reception of the breech-block and provided with cam-slots for locking engagement with said studs, firing mechanism carried by said breech-frame, and means for releasing said firing mechanism.

3. In a trap-gun, a breech-frame having spaced resilient side members provided with apertures, a breech-block provided with oppositely-disposed trunnions extending through the apertures in said side members and held thereby from rotation, a barrel having one end thereof enlarged for the reception of the breech-block and provided with cam-slots for locking engagement with said studs, a firing-pin carried by the breech-block, a spring-actuated bolt mounted on the breech-frame, a trigger for holding said bolt in withdrawn position, and means for releasing said trigger.

4. In a trap-gun, a breech-frame provided with spaced depending ears, a standard pivotally connected to said ears, a post having a swivel connection with the standard, a breech-block carried by the frame, a barrel having one end thereof enlarged for the reception of the breech-block and detachably secured to the latter, firing mechanism carried by said breech-frame, means for releasing the firing mechanism, and means for clamping the standard to the depending ears of the breech-frame.

In testimony that I claim the foregoing as my own I have hereto affixed my signature in the presence of two witnesses.

CHARLES D. LOVELACE.

Witnesses:
J. WALLACE WILLIAMS,
D. P. SMITH.