US 20050177182A1

(19) United States

(12) Patent Application Publication (10) Pub. No.: US 2005/0177182 A1

van der Burg et al. (43) Pub. Date: Aug. 11, 2005

(54) SYSTEM AND METHOD FOR DELIVERING A LEFT ATRIAL APPENDAGE CONTAINMENT DEVICE

(76) Inventors: **Erik J. van der Burg**, Los Gatos, CA (US); **Stewart M. Kume**, Belmont, CA (US)

Correspondence Address:
KNOBBE MARTENS OLSON & BEAR LLP
2040 MAIN STREET
FOURTEENTH FLOOR
IRVINE, CA 92614 (US)

(21) Appl. No.: **11/003,696**

(22) Filed: **Dec. 3, 2004**

Related U.S. Application Data

(60) Provisional application No. 60/526,960, filed on Dec. 4, 2003.

Publication Classification

(51) **Int. Cl.**[7] **A61B 17/08**

(52) **U.S. Cl.** **606/157**

(57) **ABSTRACT**

A method of delivering and deploying the device for containing the emboli during a surgical procedure proximate to the heart. Access is gained to the heart and the left atrium such that a distal end of the delivery sheath can be located near the left atrial appendage. A distal end of a delivery catheter can be loaded with the device in a collapsed position and passed through the delivery sheath thereby delivering the device within the left atrial appendage. The device is expanded to contain emboli in the left atrium appendage.

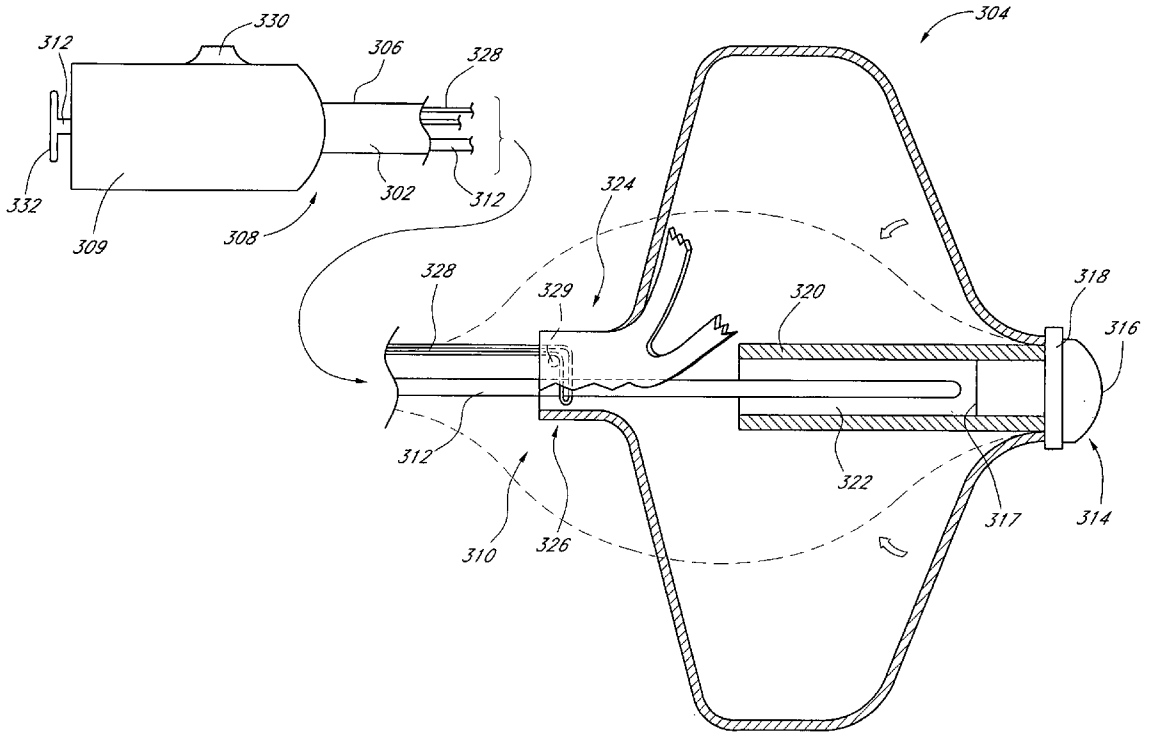

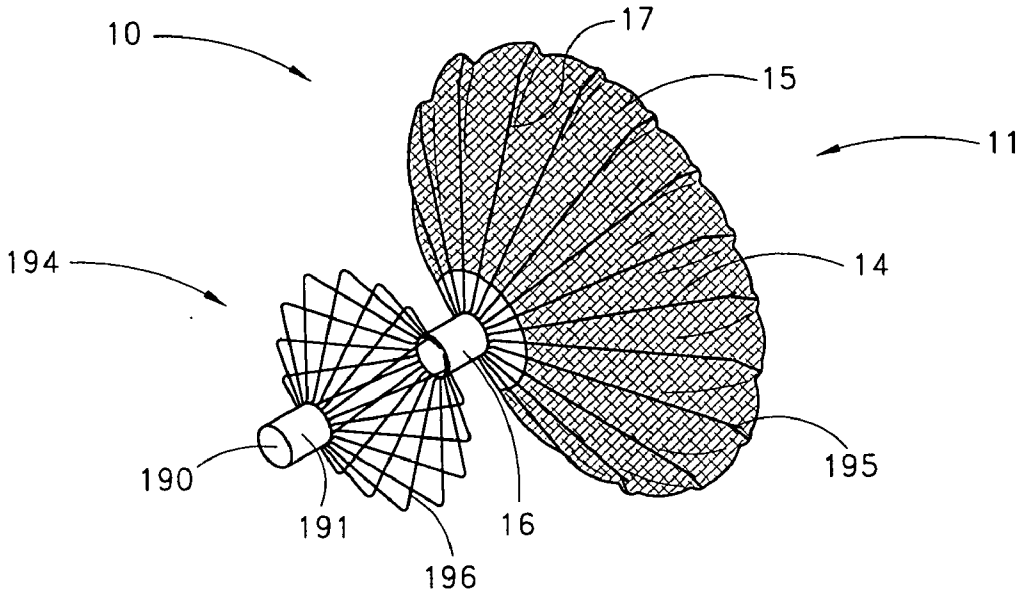
10
17
15
11
194
14
195
190
191
16
196

FIG. 1

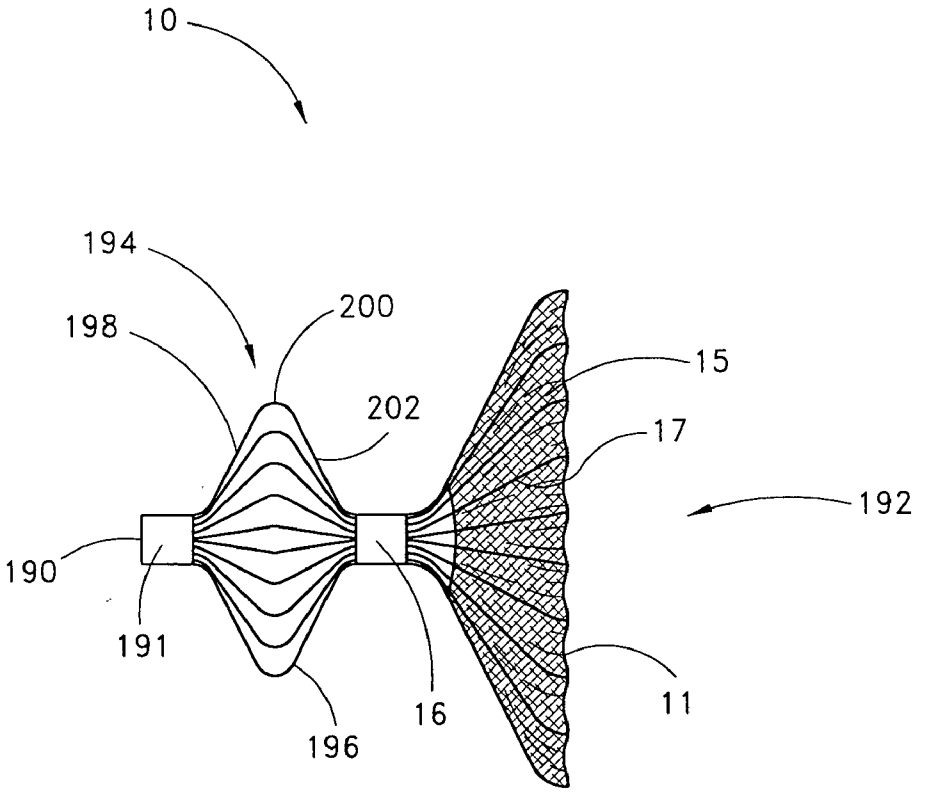
10
194
200
198
15
202
17
192
190
191
16
11
196

FIG. 2

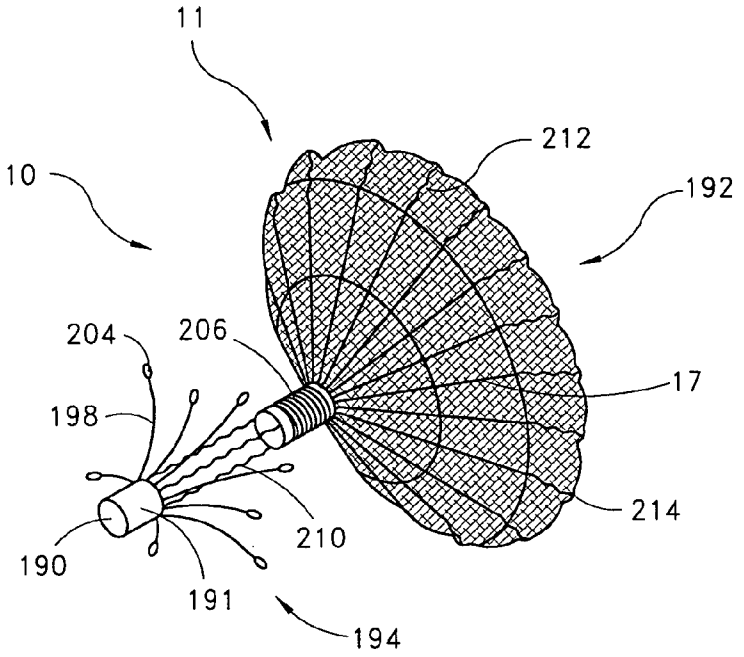
11
212
10
192
204
206
17
198
214
210
190
191
194

FIG. 3

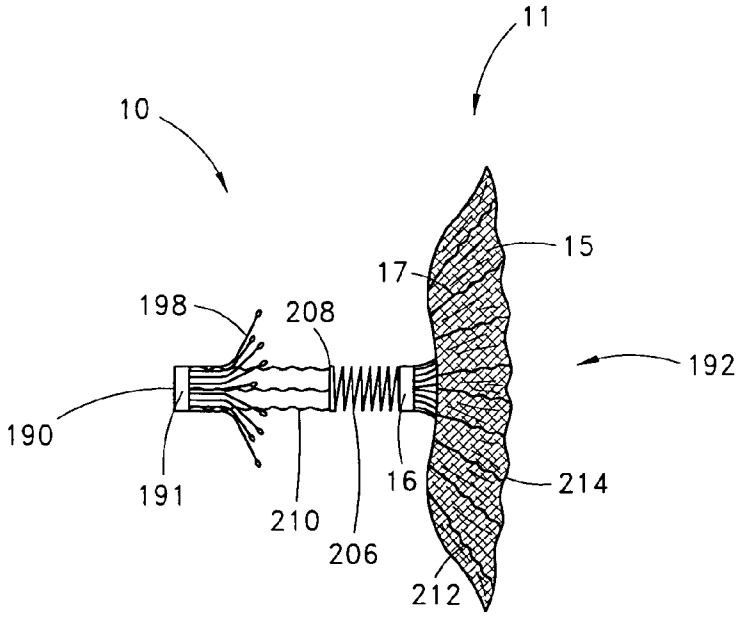
11
10
15
17
198
208
192
190
16
214
191
210
206
212

FIG. 4

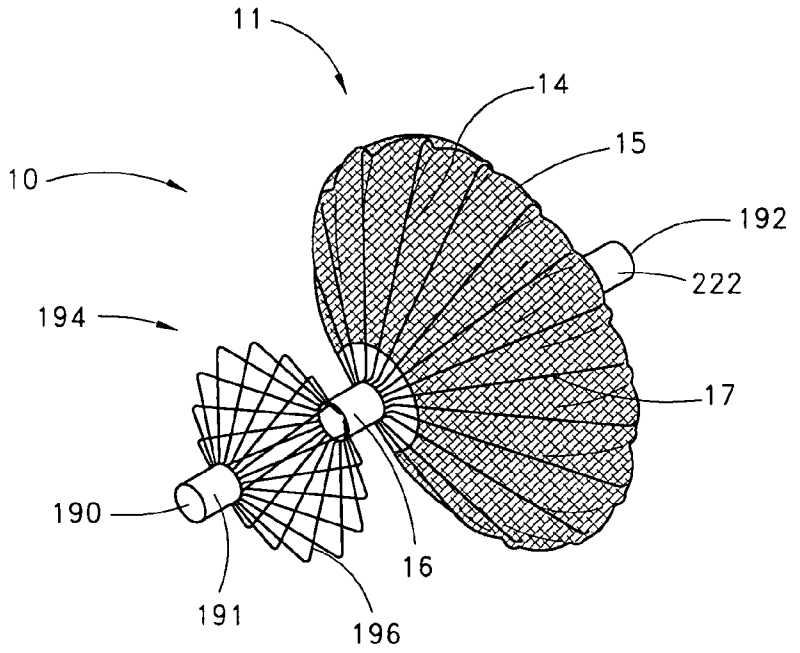
11
14
15
10
192
222
194
17
190
16
191
196

FIG. 5

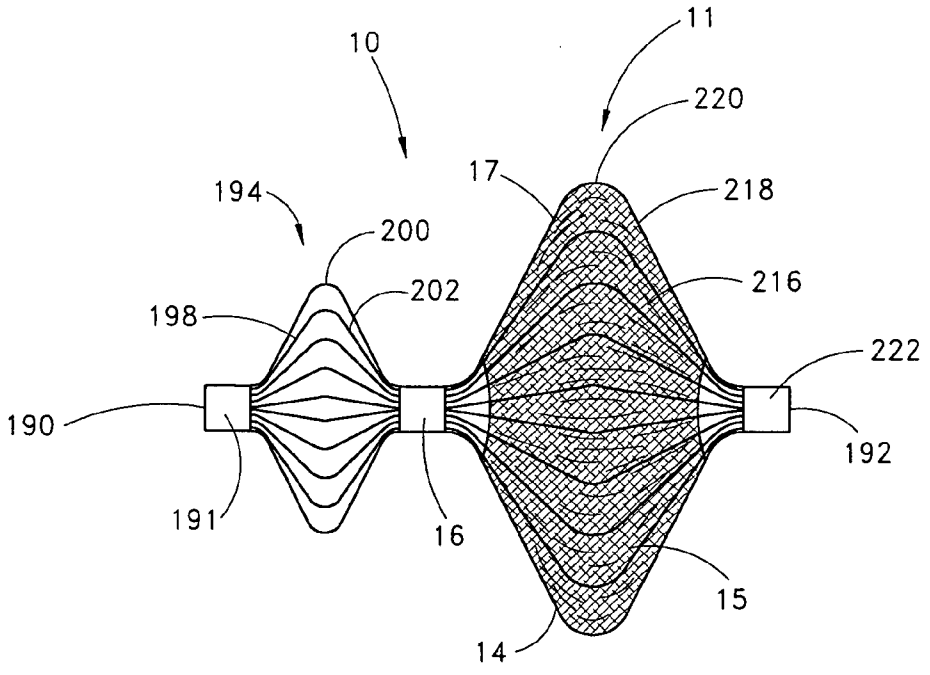
10
11
220
17
194
218
200
216
202
198
222
190
192
191
16
15
14

FIG. 6

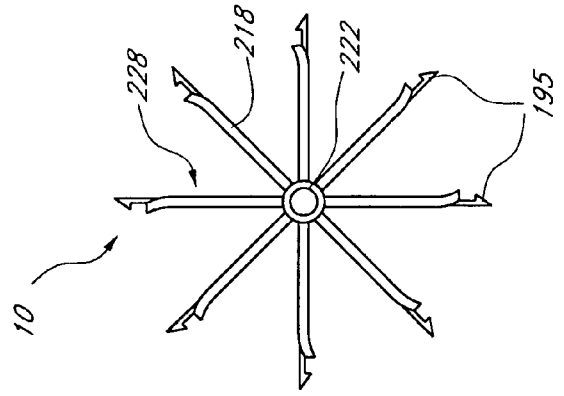

FIG. 7B

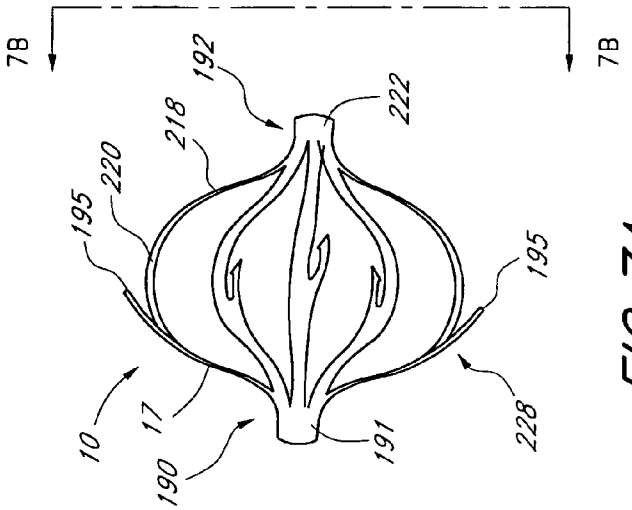

FIG. 7A

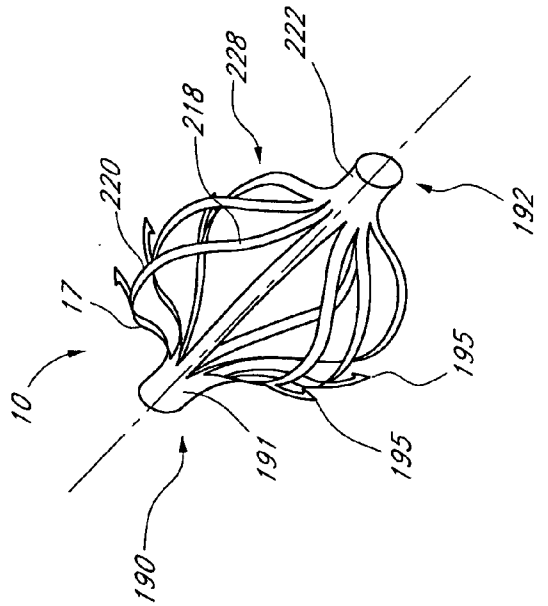

FIG. 7

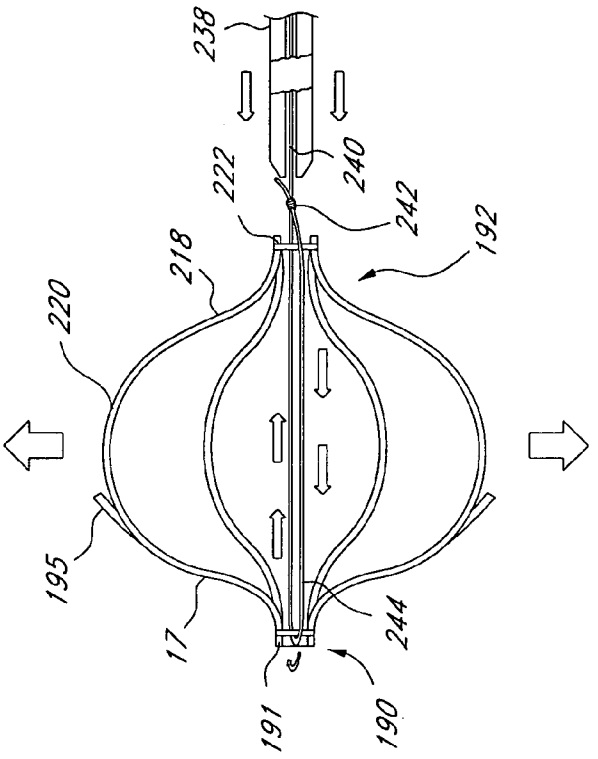
238
240
242
222
218
192
220
195
17
244
191
190

FIG. 9

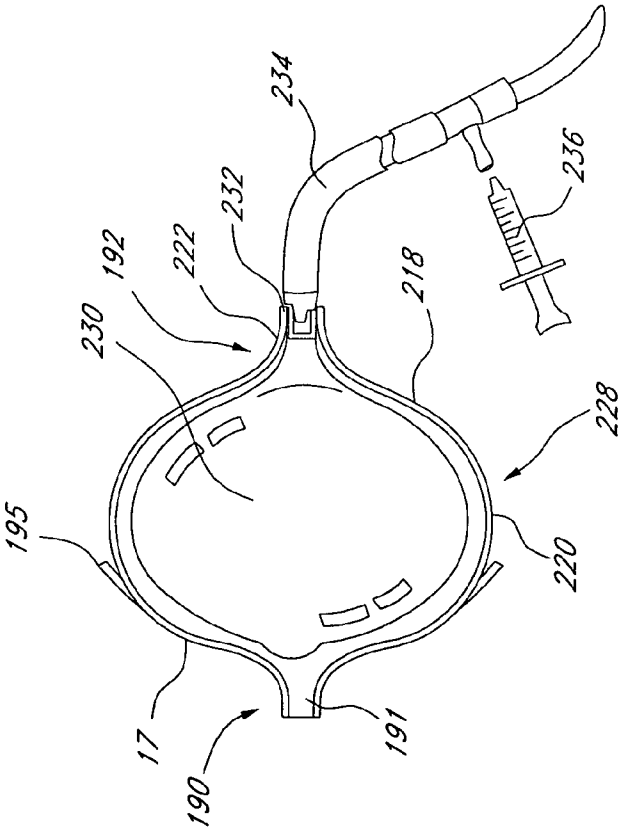
234
236
232
192
222
218
230
228
195
220
17
191
190

FIG. 8

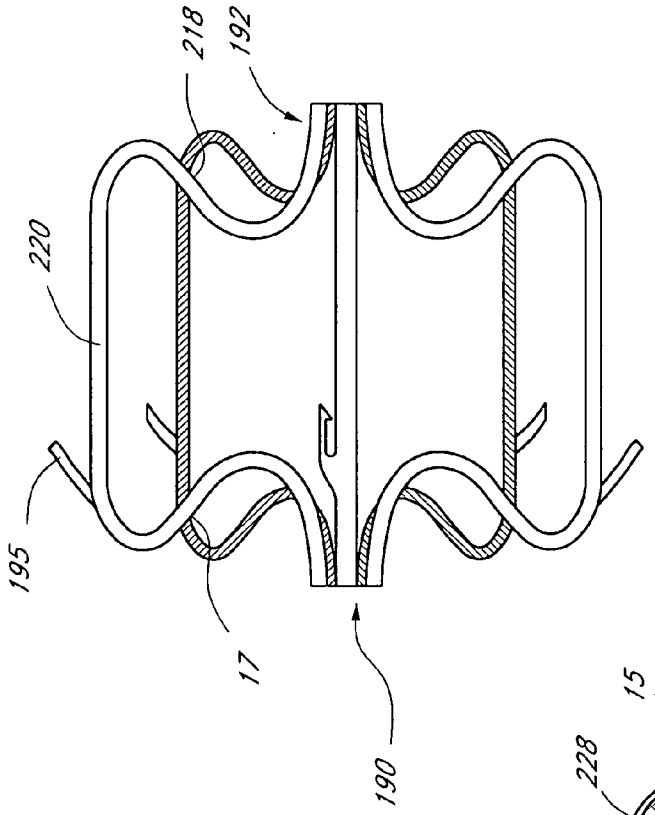

FIG. 12

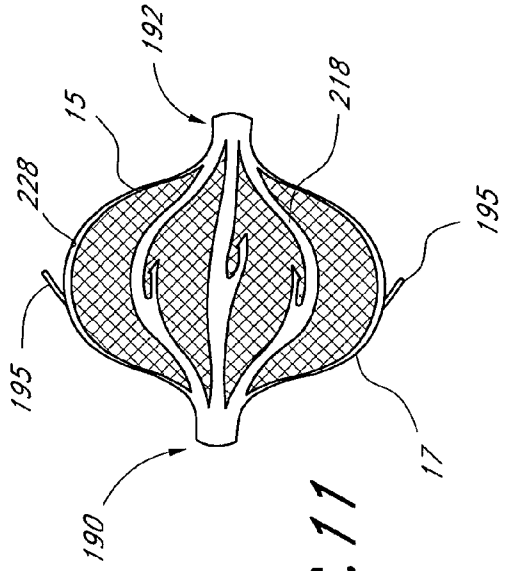

FIG. 11

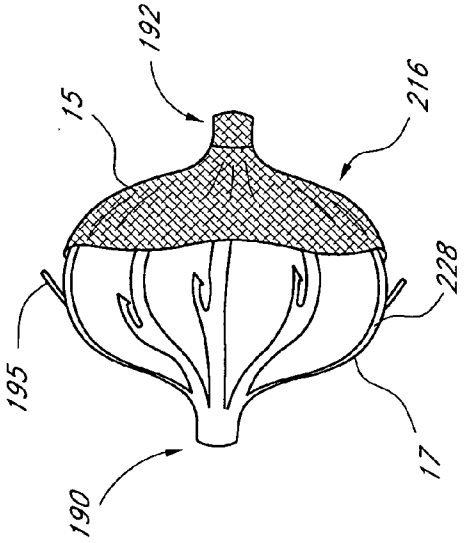

FIG. 10

FIG. 13

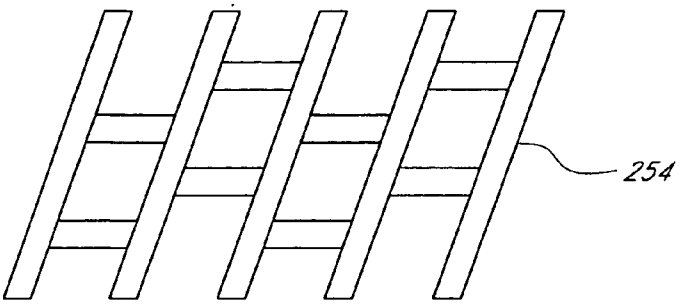

FIG. 14

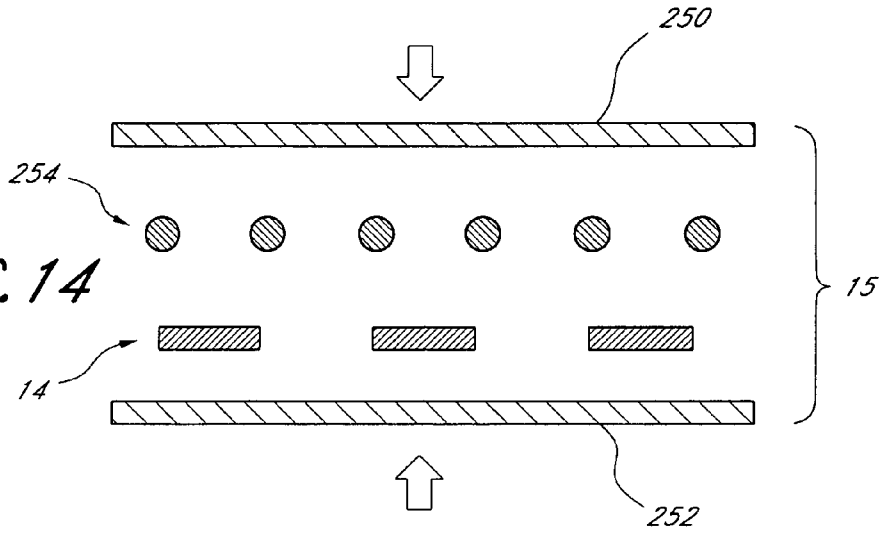

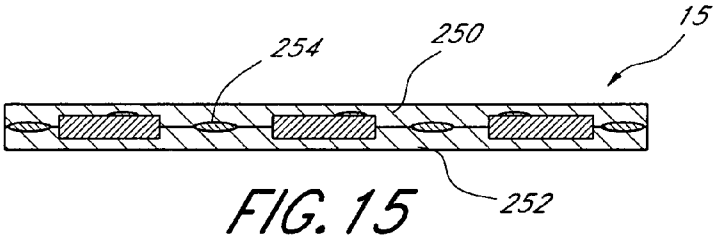

FIG. 15

FIG. 16

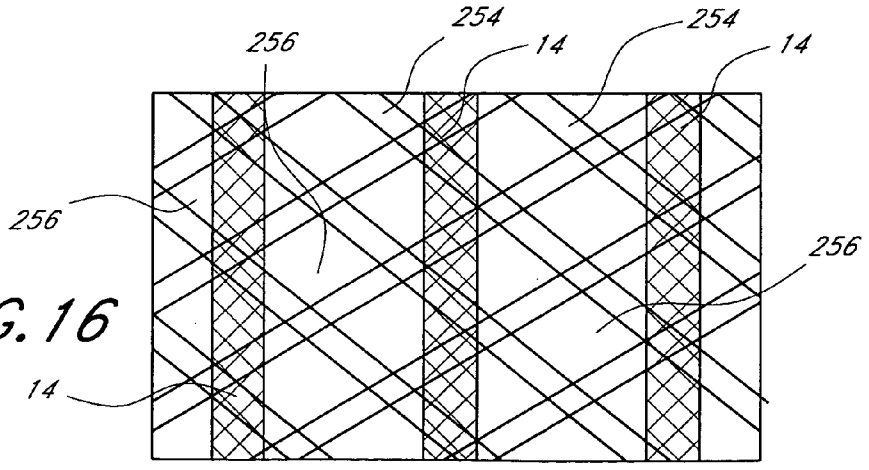

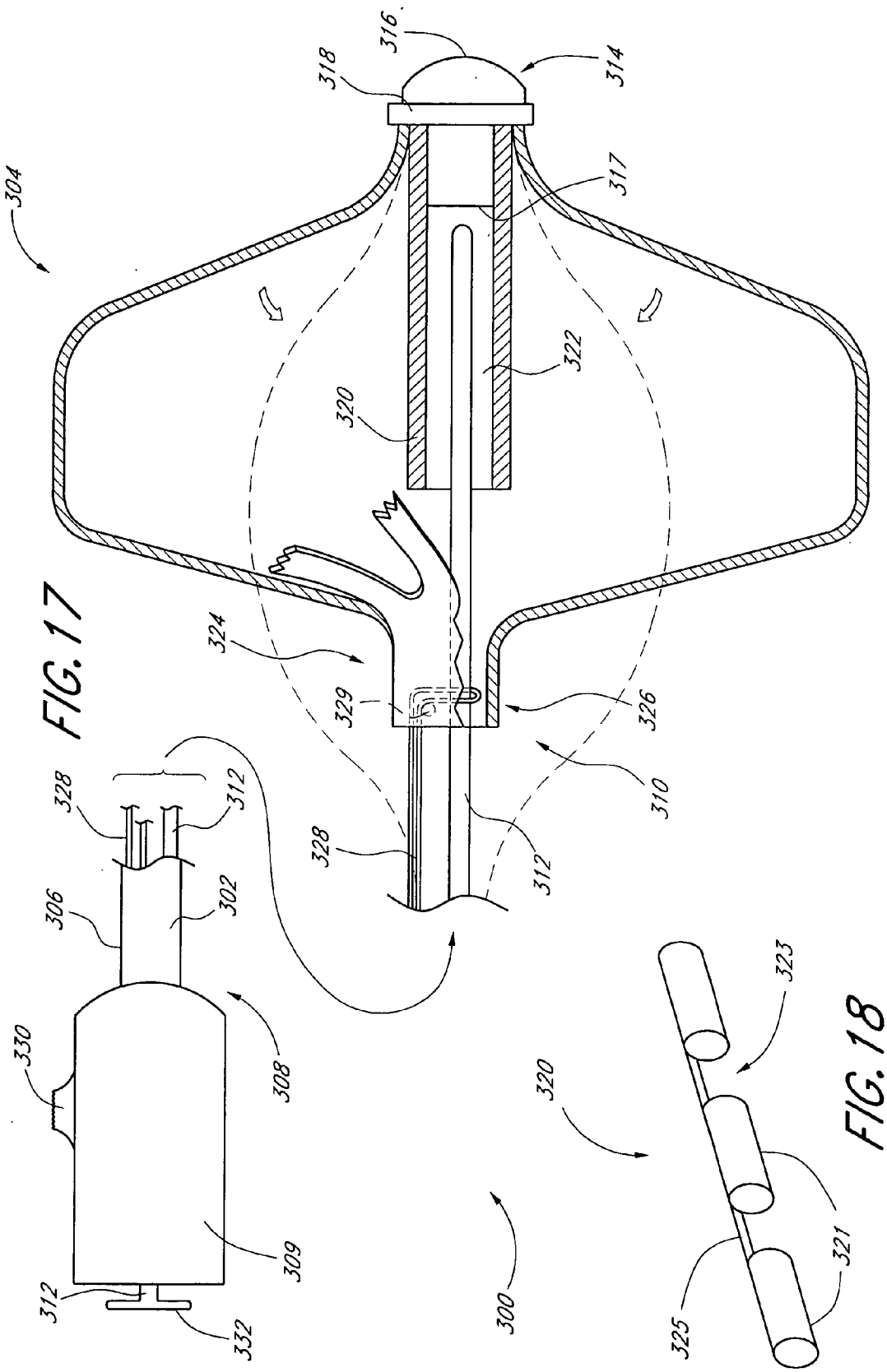
316
318
314
304
317
322
320
324
329
326
310
328
312
328
312
306
302
330
308
309
312
332
300
320
323
321
325

FIG. 17

FIG. 18

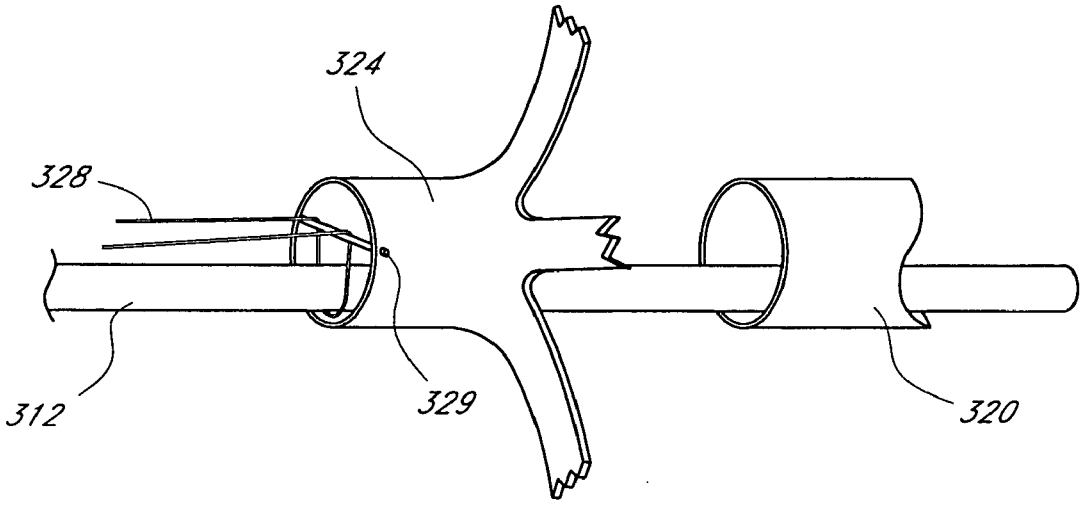

FIG. 17A

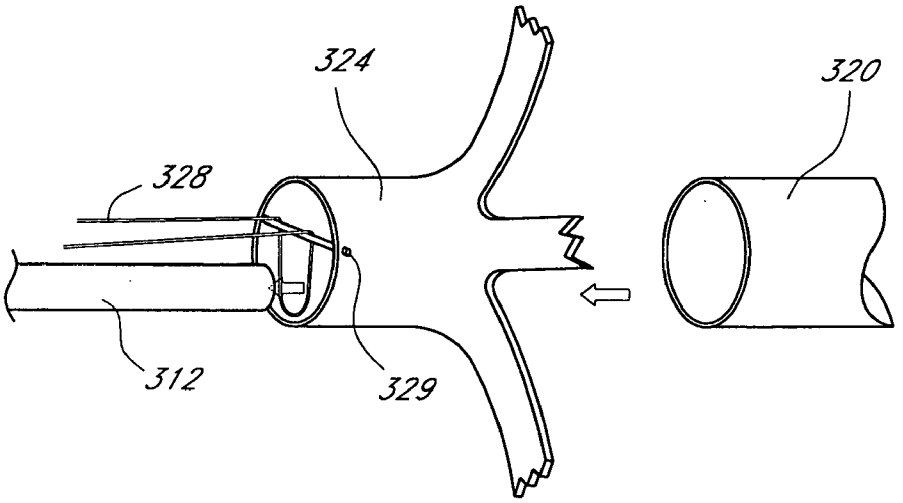

FIG. 17B

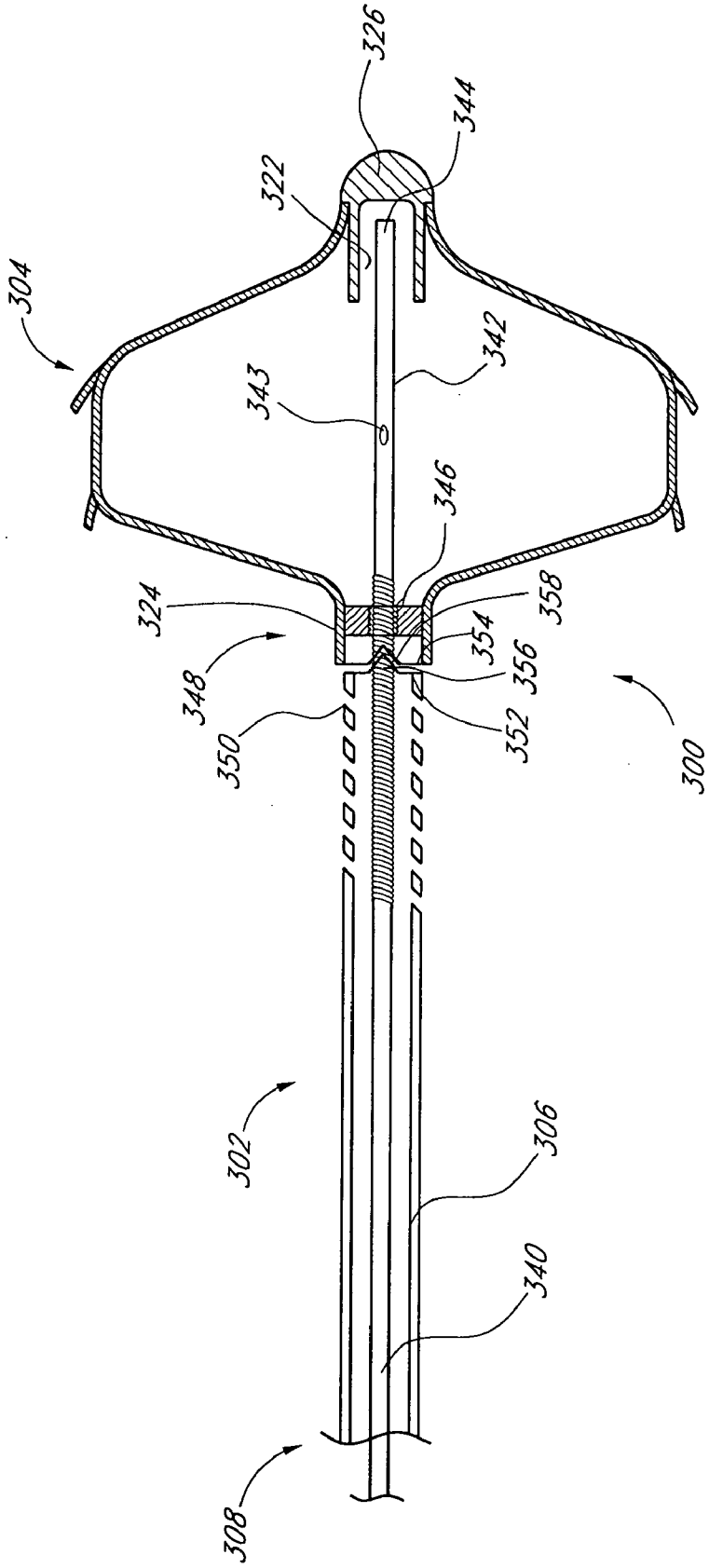
326
344
322
304
342
343
346
324
358
354
356
348
350
352
300
302
306
340
308

FIG. 19

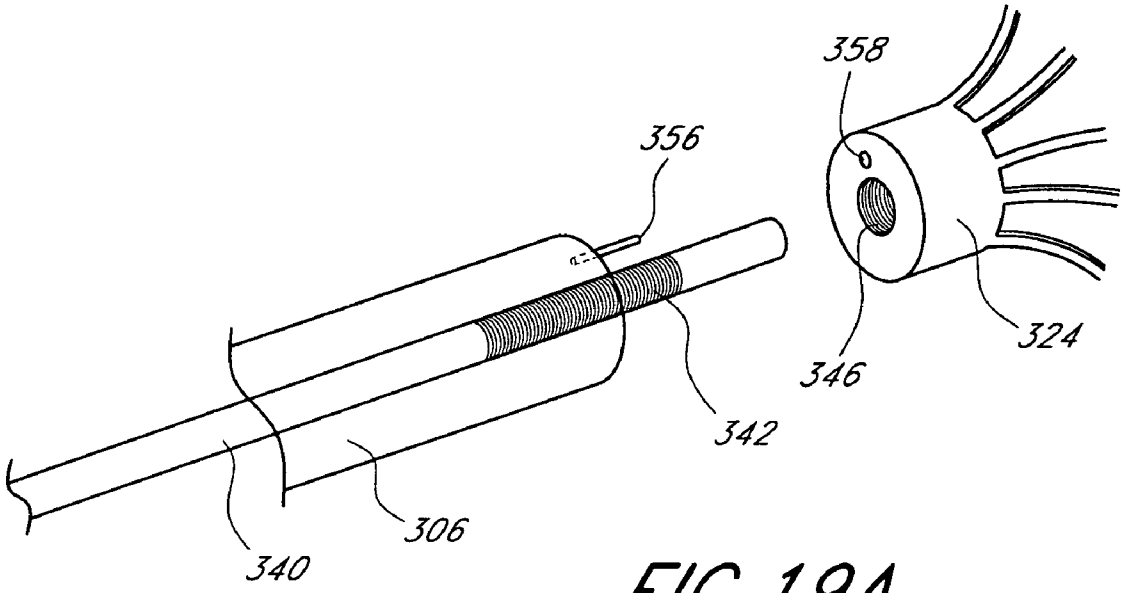

FIG. 19A

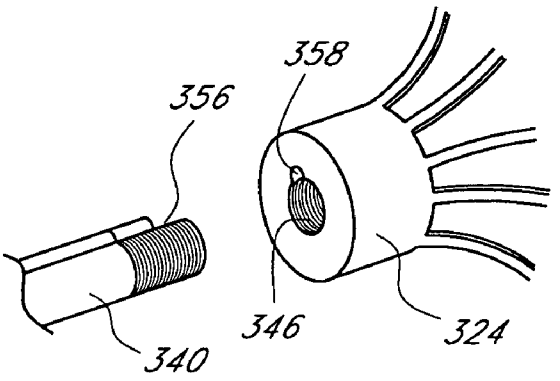

FIG. 19B

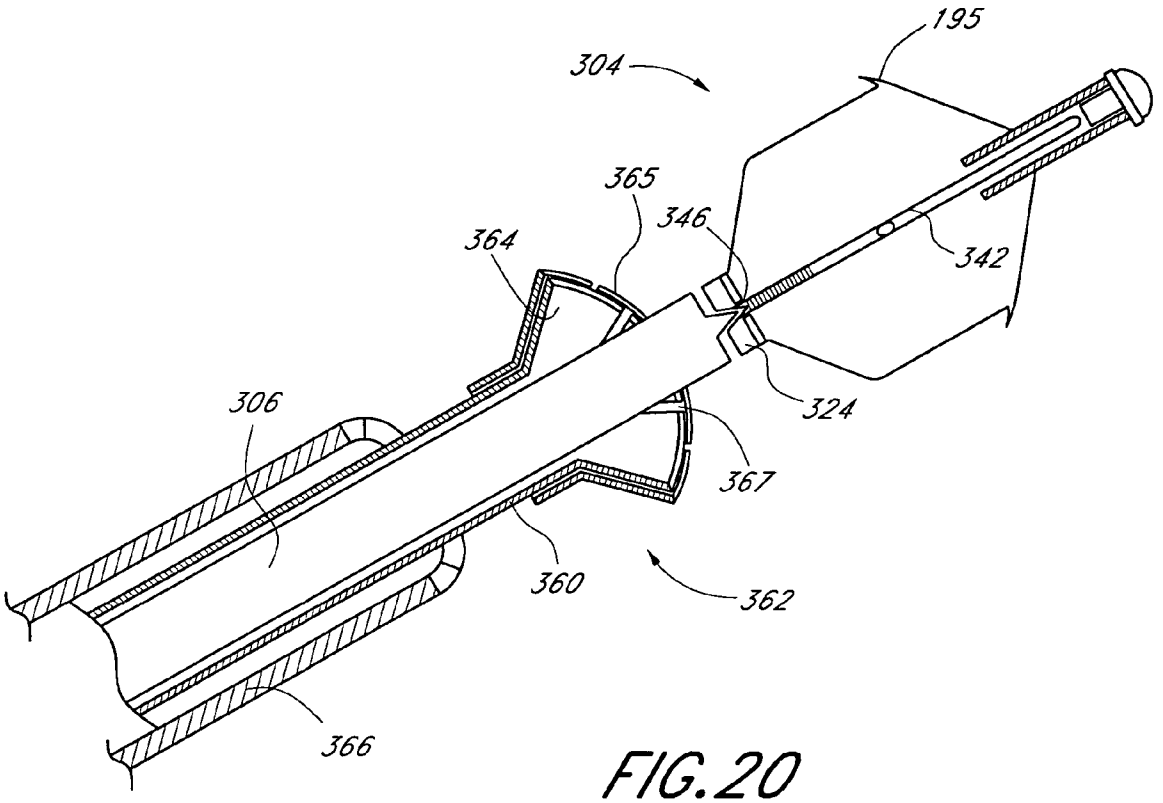

FIG. 20

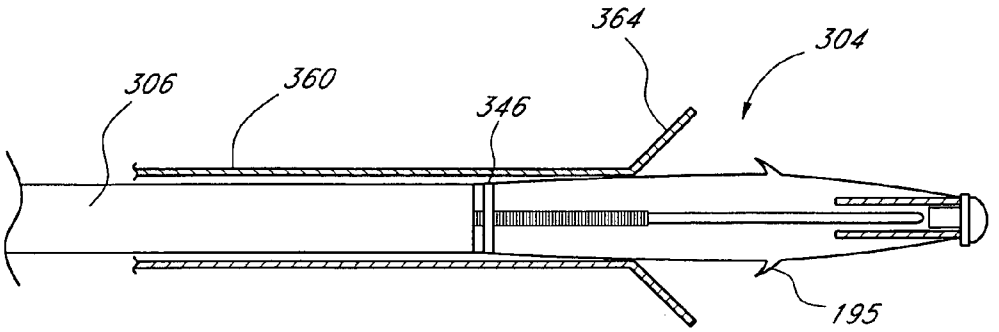

FIG. 20A

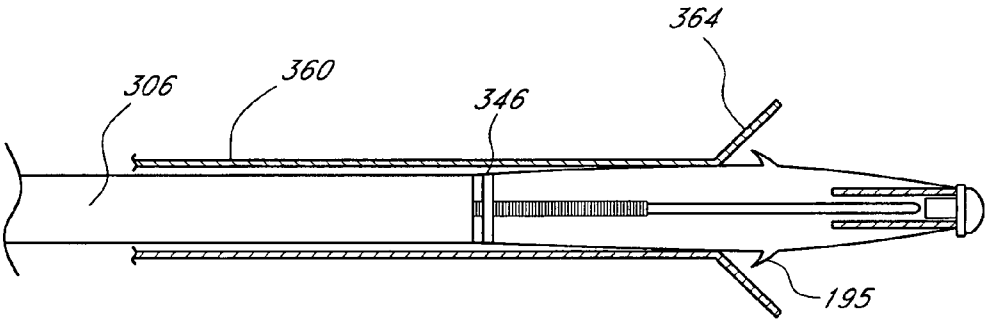

FIG. 20B

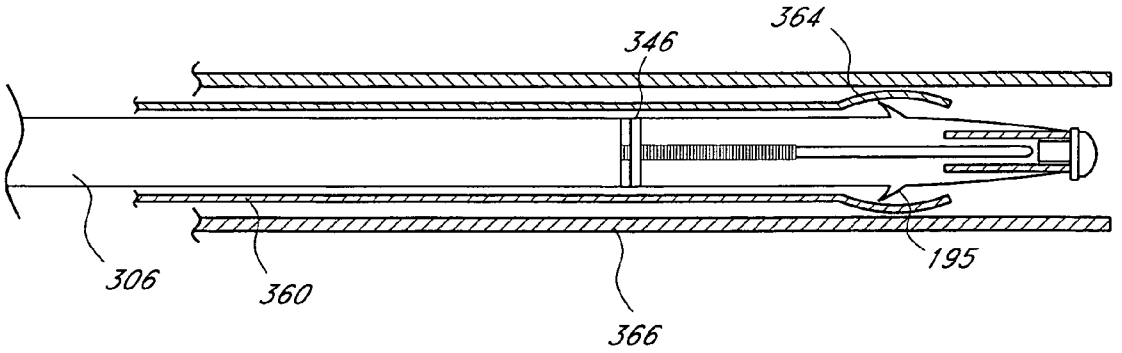

FIG. 20C

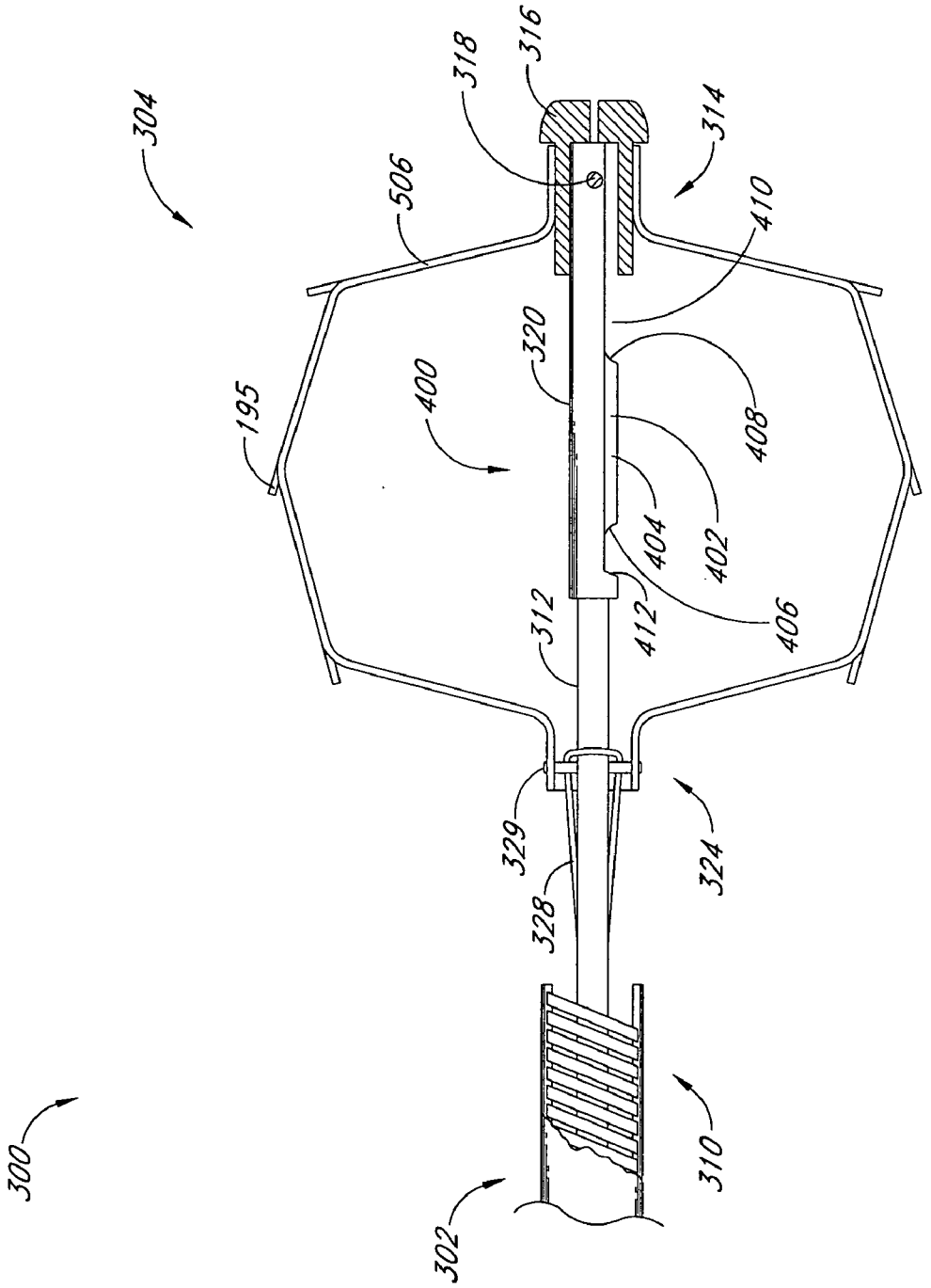
304
318
316
314
506
410
320
400
195
408
404
402
312
412
406
329
324
328
300
310
302

FIG. 21

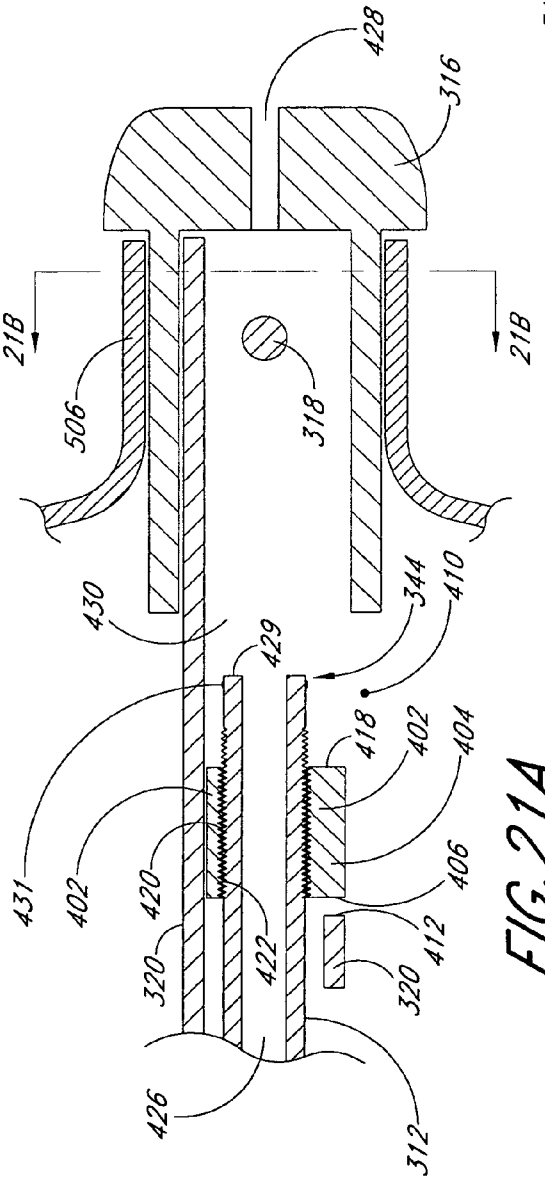

FIG.21A

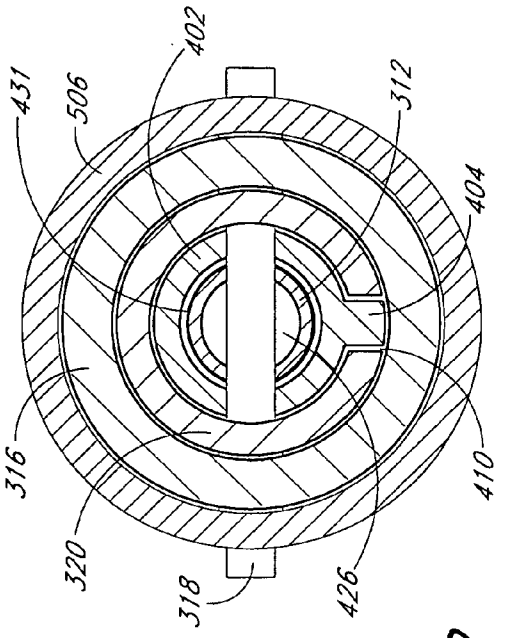

FIG.21B

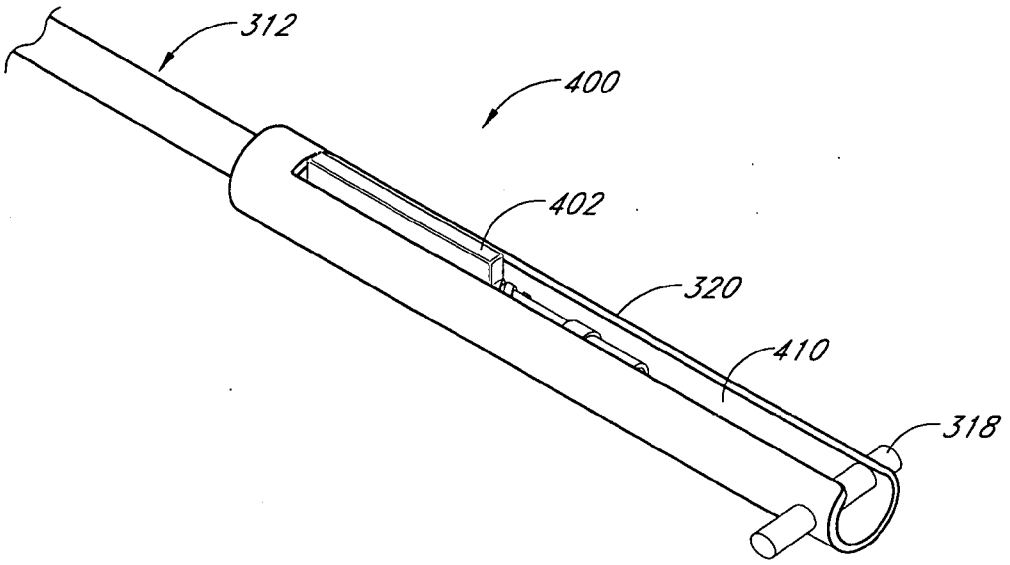

FIG. 21C

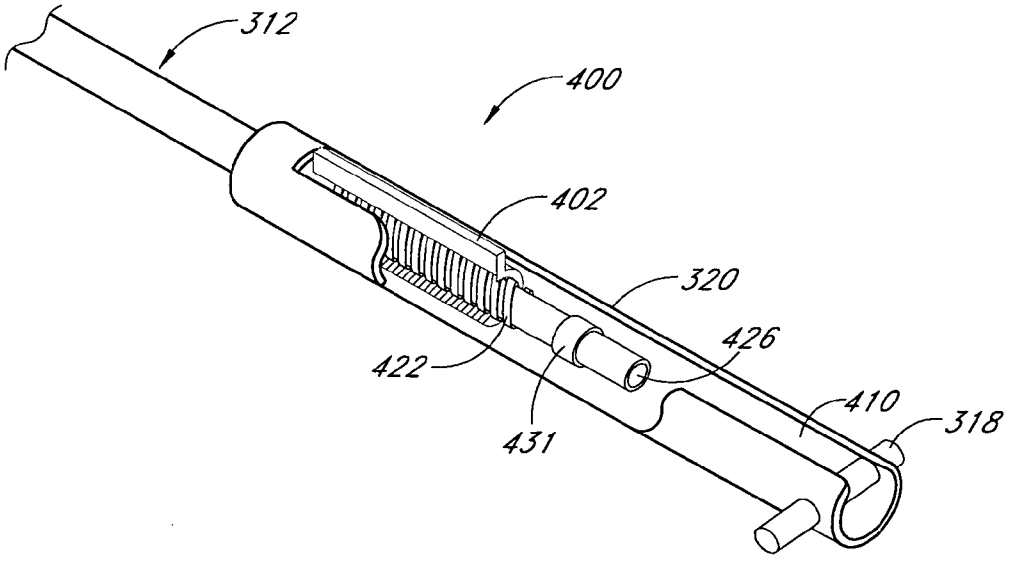

FIG. 21D

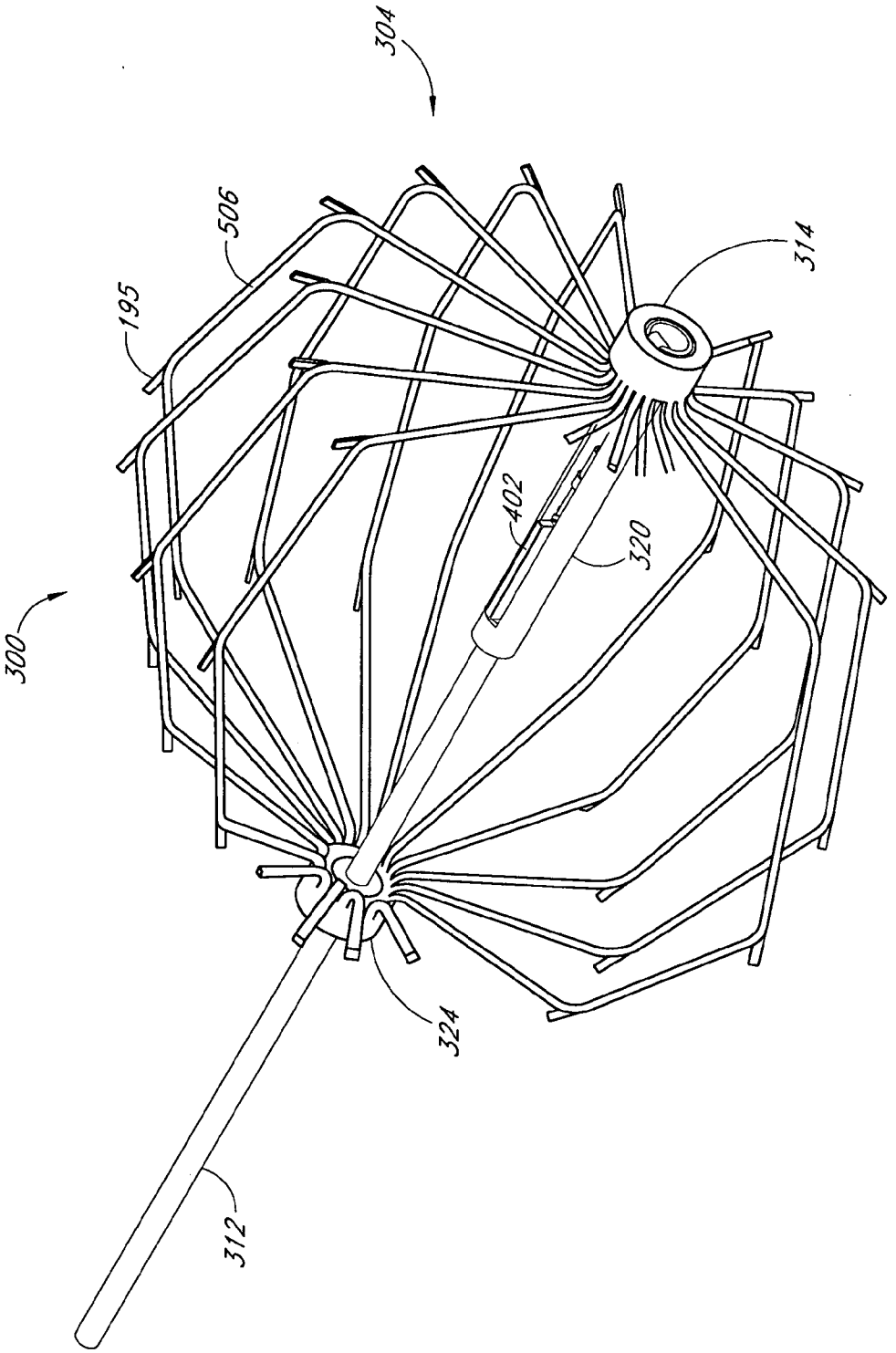

FIG.21E

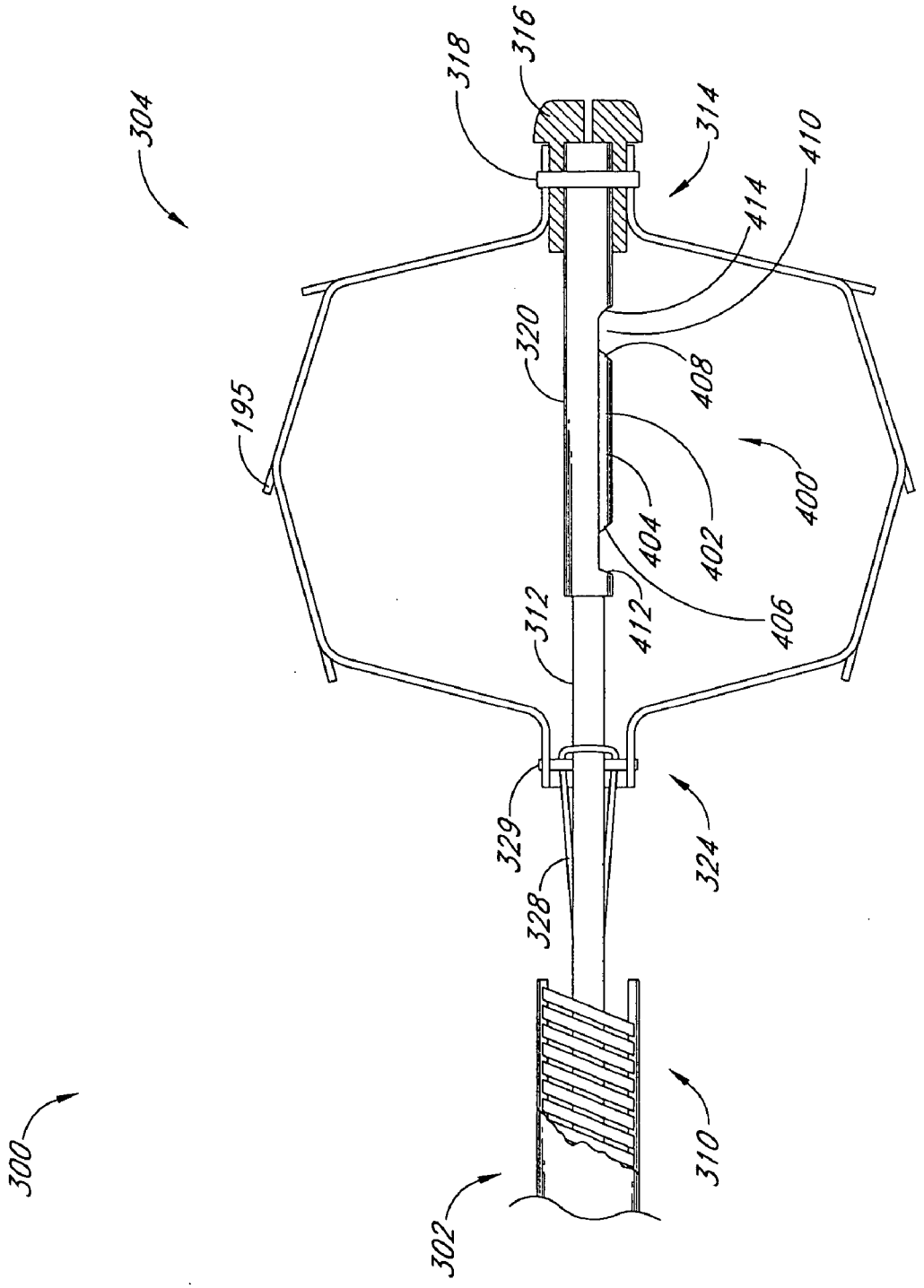
300
302
304
310
312
314
316
318
320
324
328
329
400
402
404
406
408
410
412
414
195

FIG.22

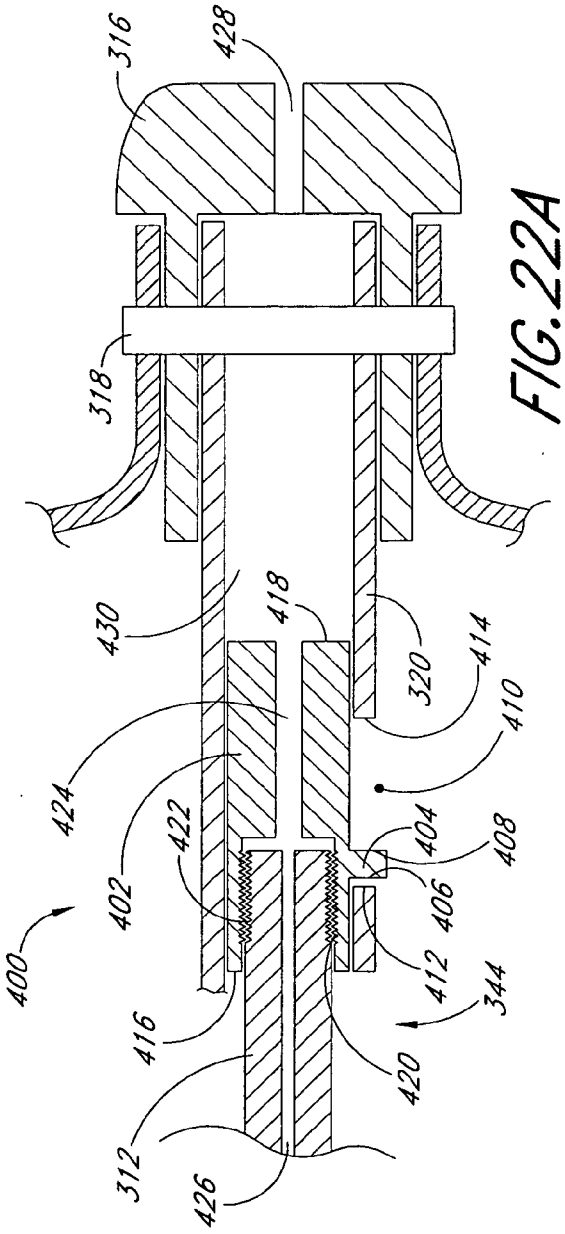

FIG. 22A

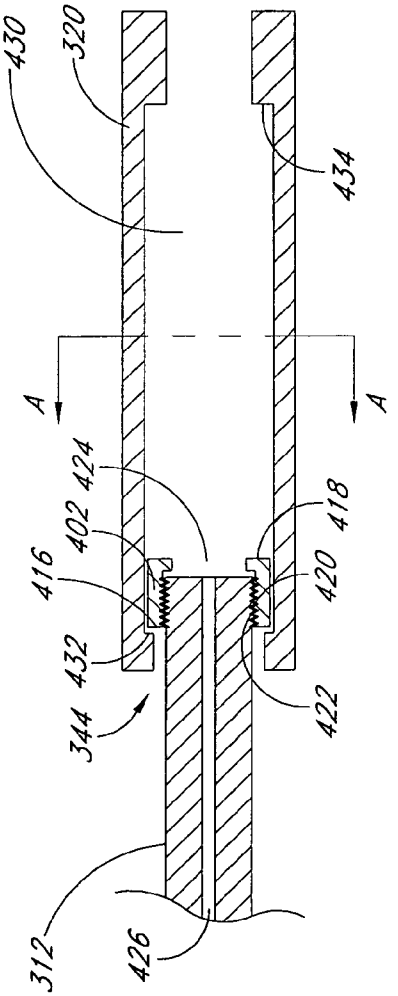

FIG. 23

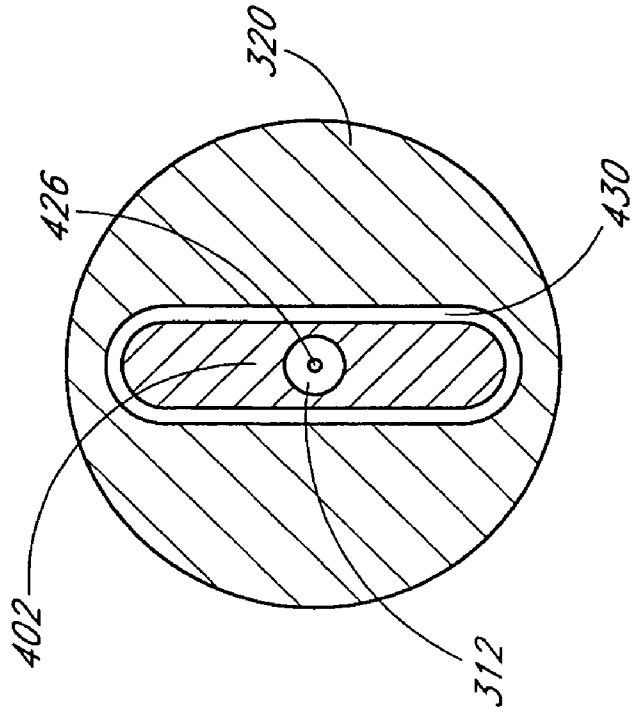

FIG.25

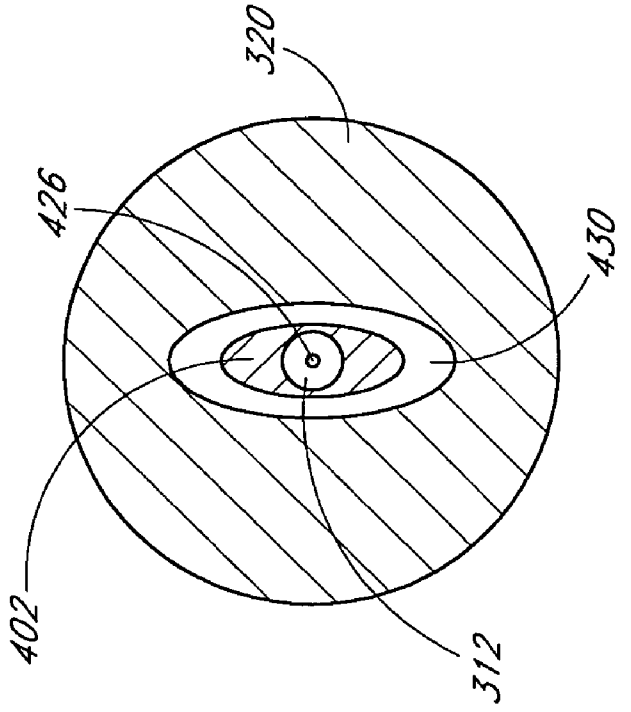

FIG.24

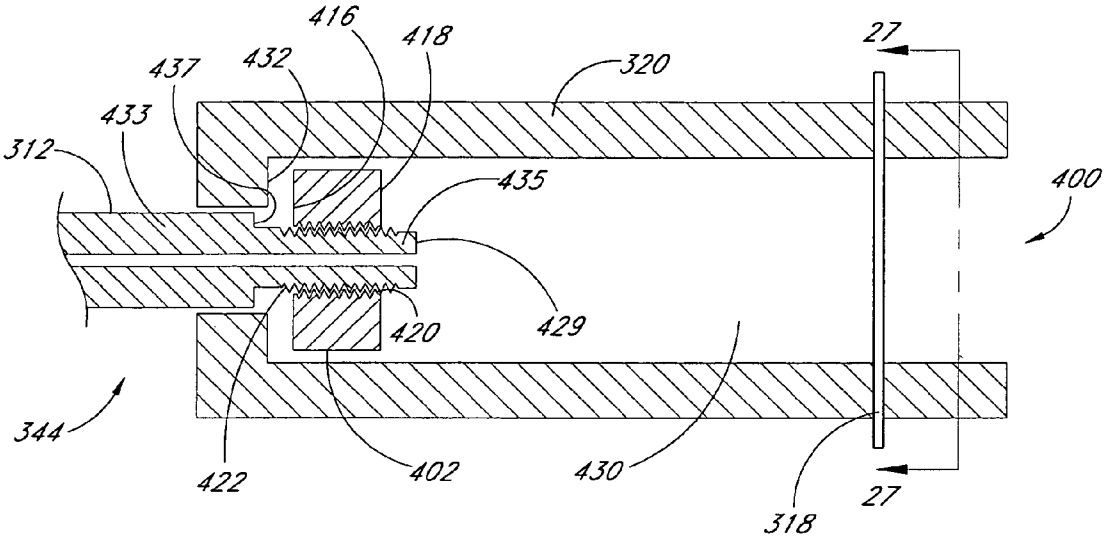

FIG. 26

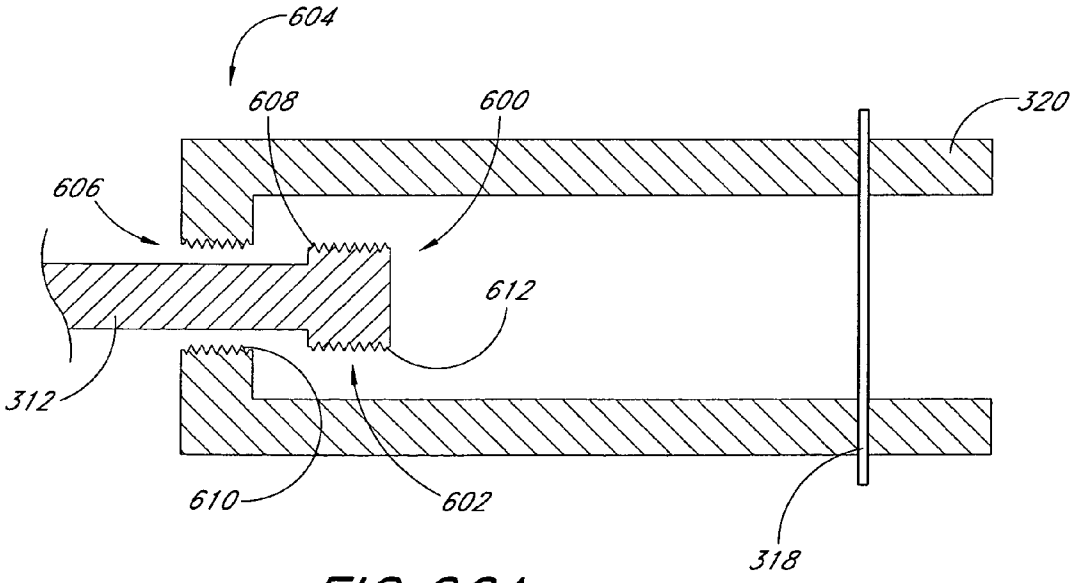

FIG. 26A

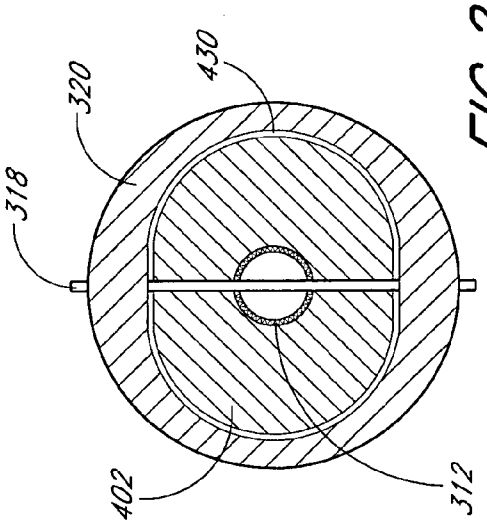

FIG. 27

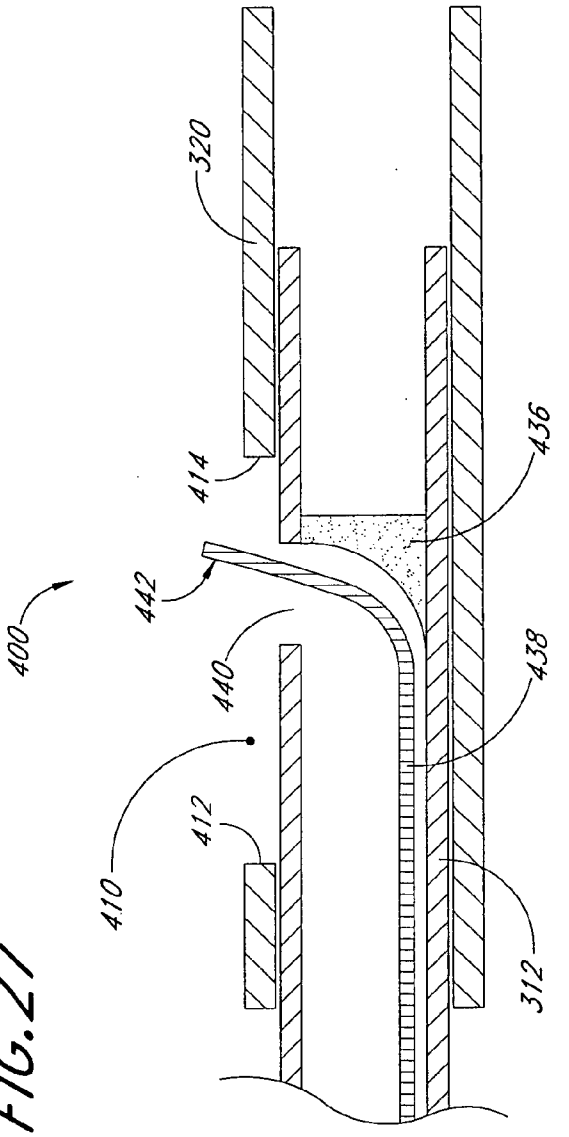

FIG. 28

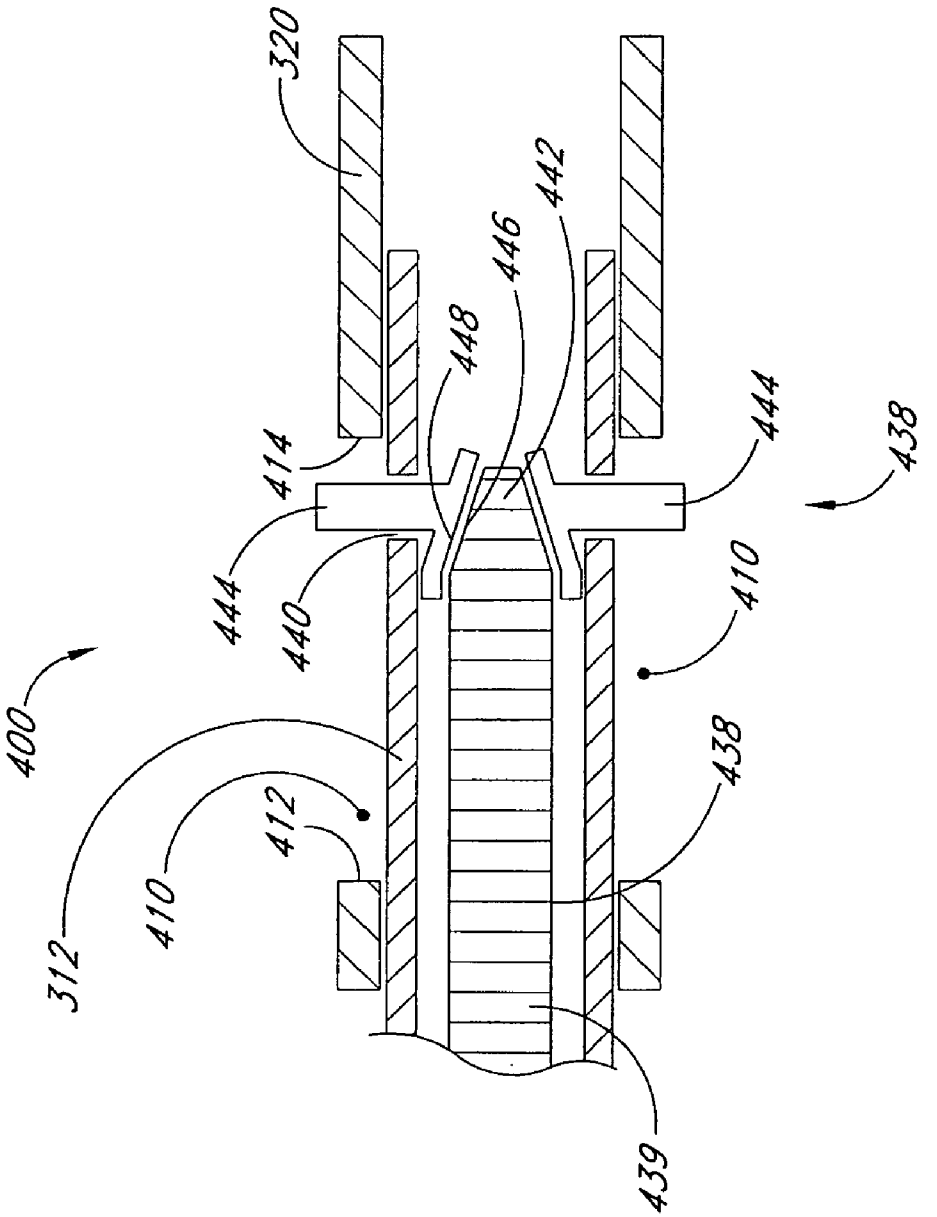

FIG. 29

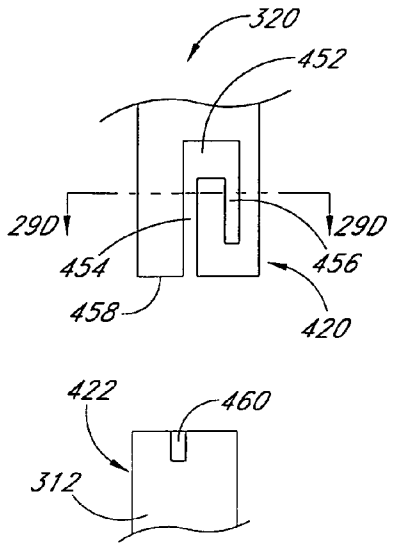

FIG. 29A

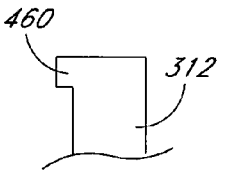

FIG. 29B

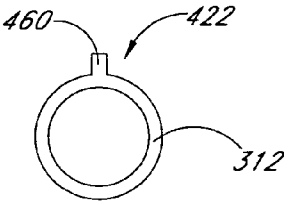

FIG. 29C

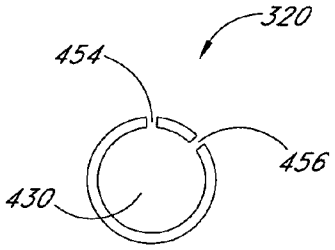

FIG. 29D

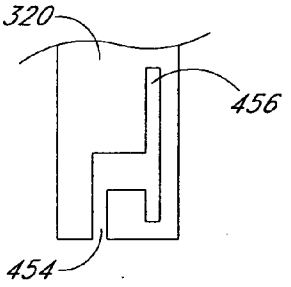

FIG. 29E

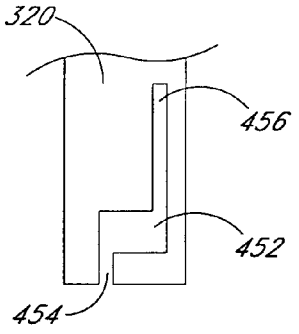

FIG. 29F

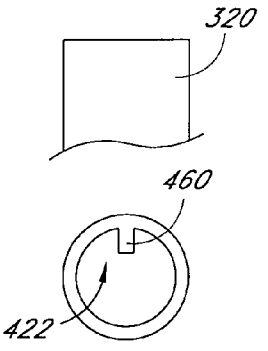

FIG. 29G

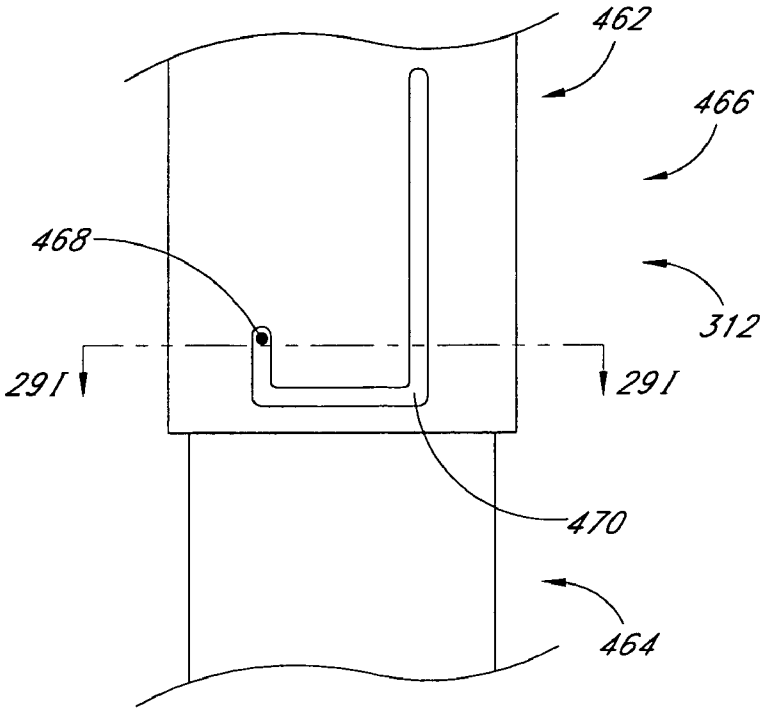

FIG. 29H

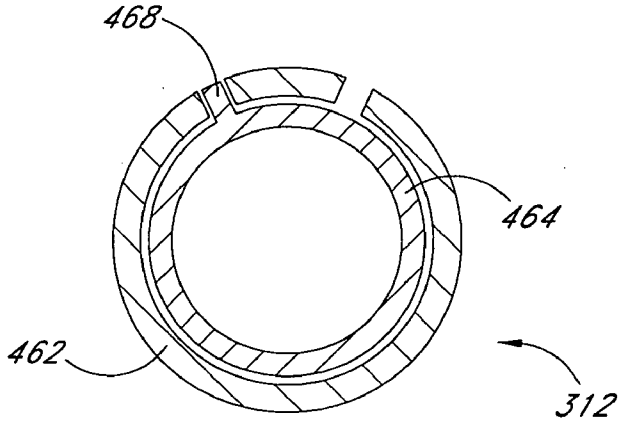

FIG. 29I

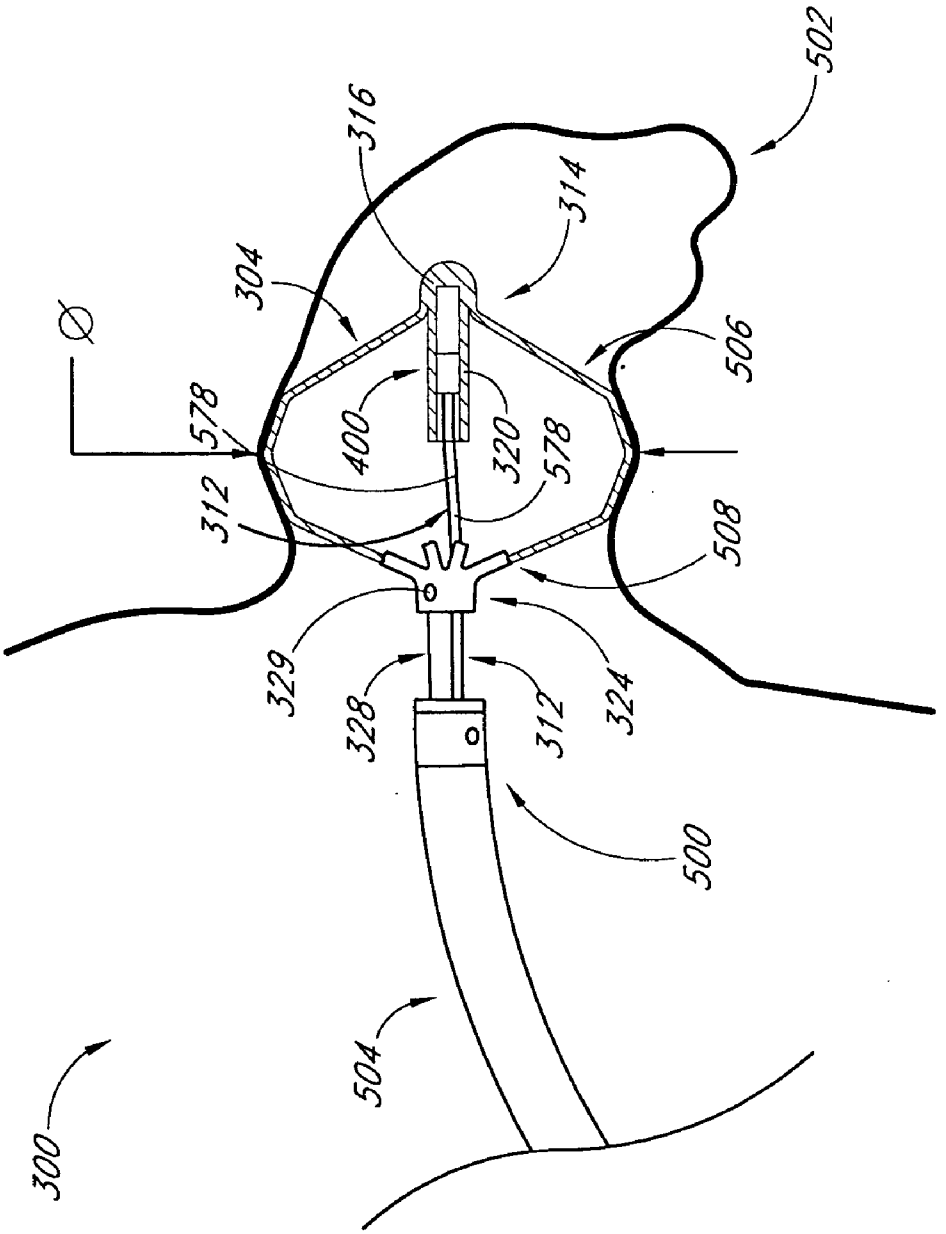
502
316
314
304
506
578
400
320
578
312
508
329
328
312
324
500
504
300

FIG. 30

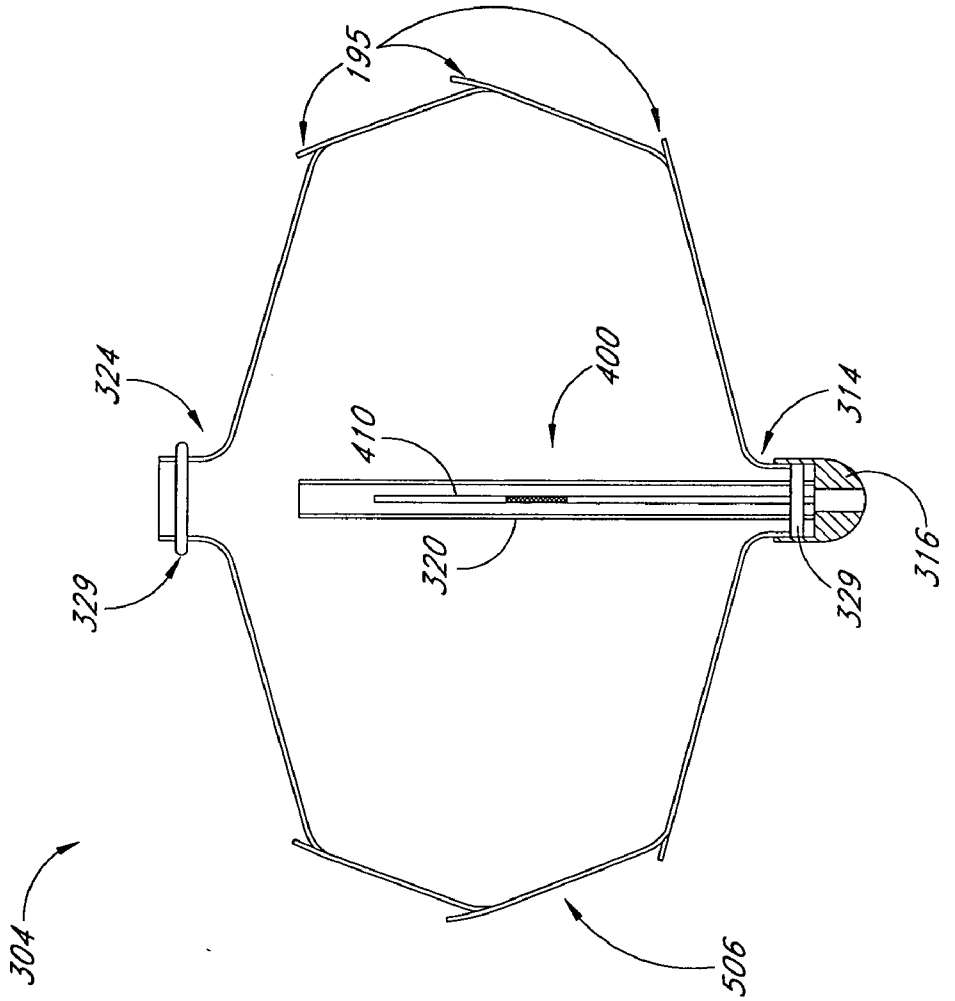

FIG. 31

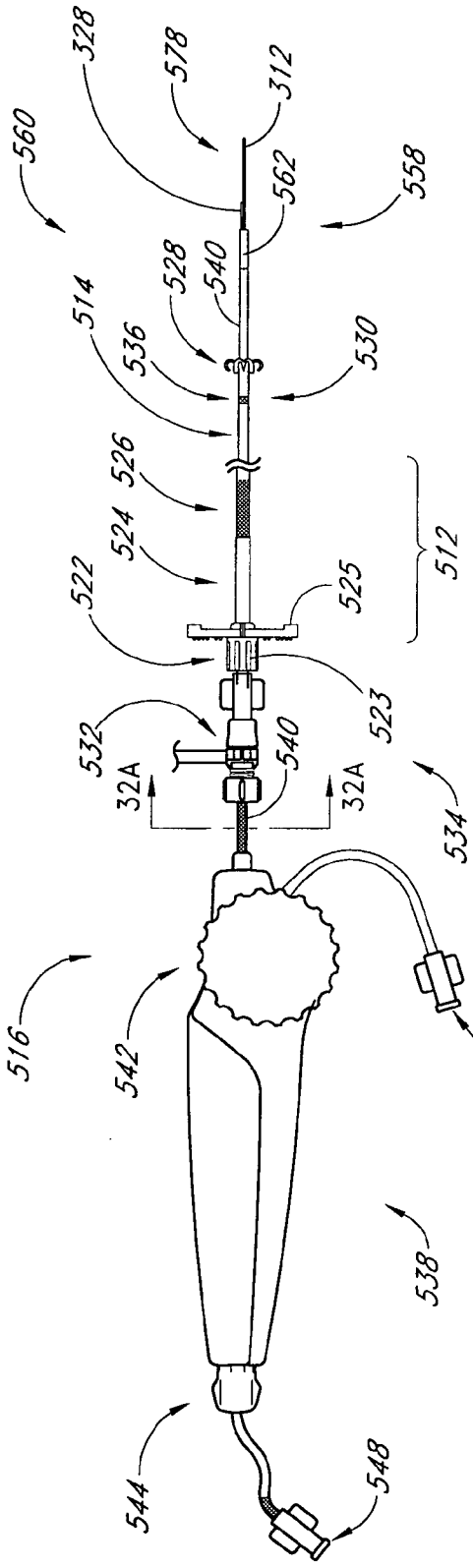

FIG. 32

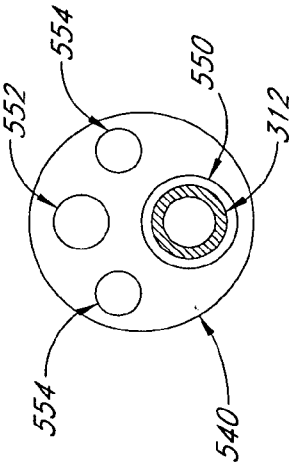

FIG. 32A

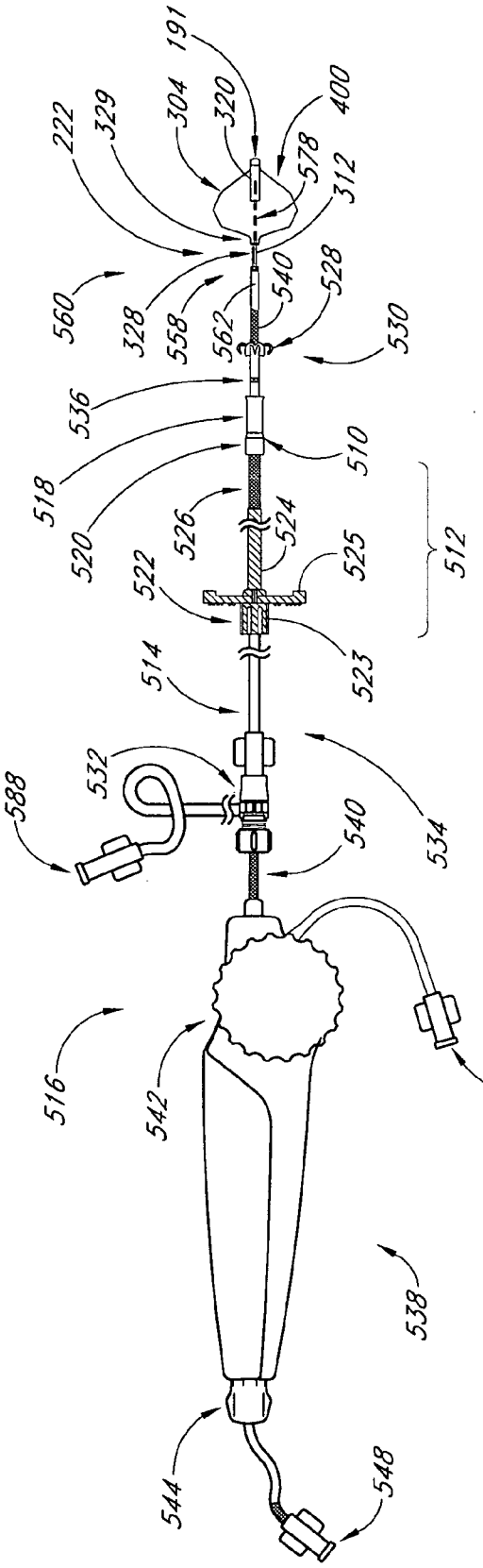
191
304
320
400
222
329
578
312
560
328
558
562
540
528
530
536
510
518
520
526
524
512
522
525
523
514
532
588
534
540
516
542
546
538
500
544
548

FIG. 33

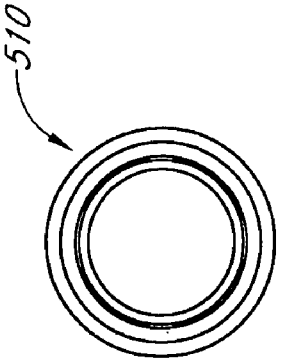

FIG. 34B

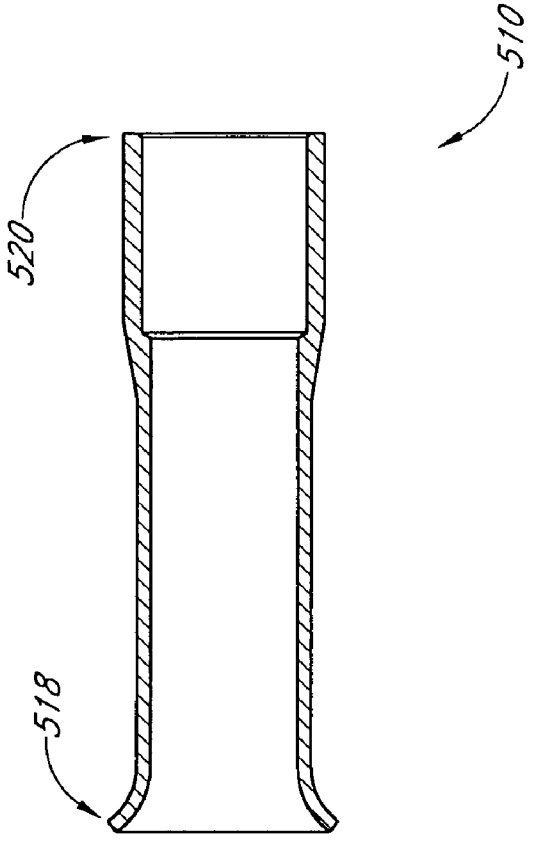

FIG. 34A

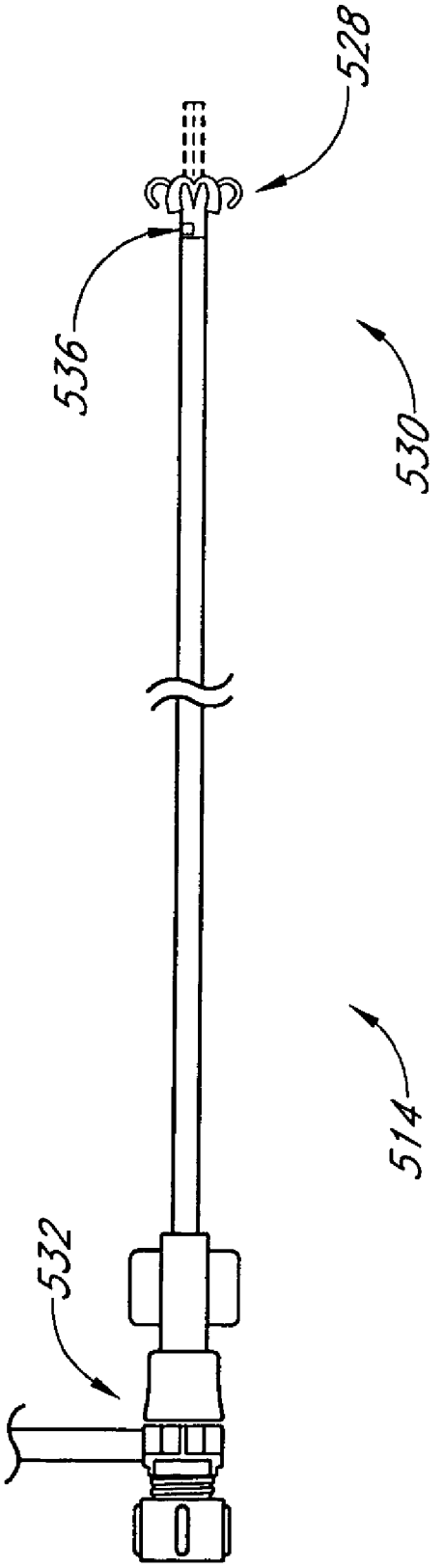

FIG. 35

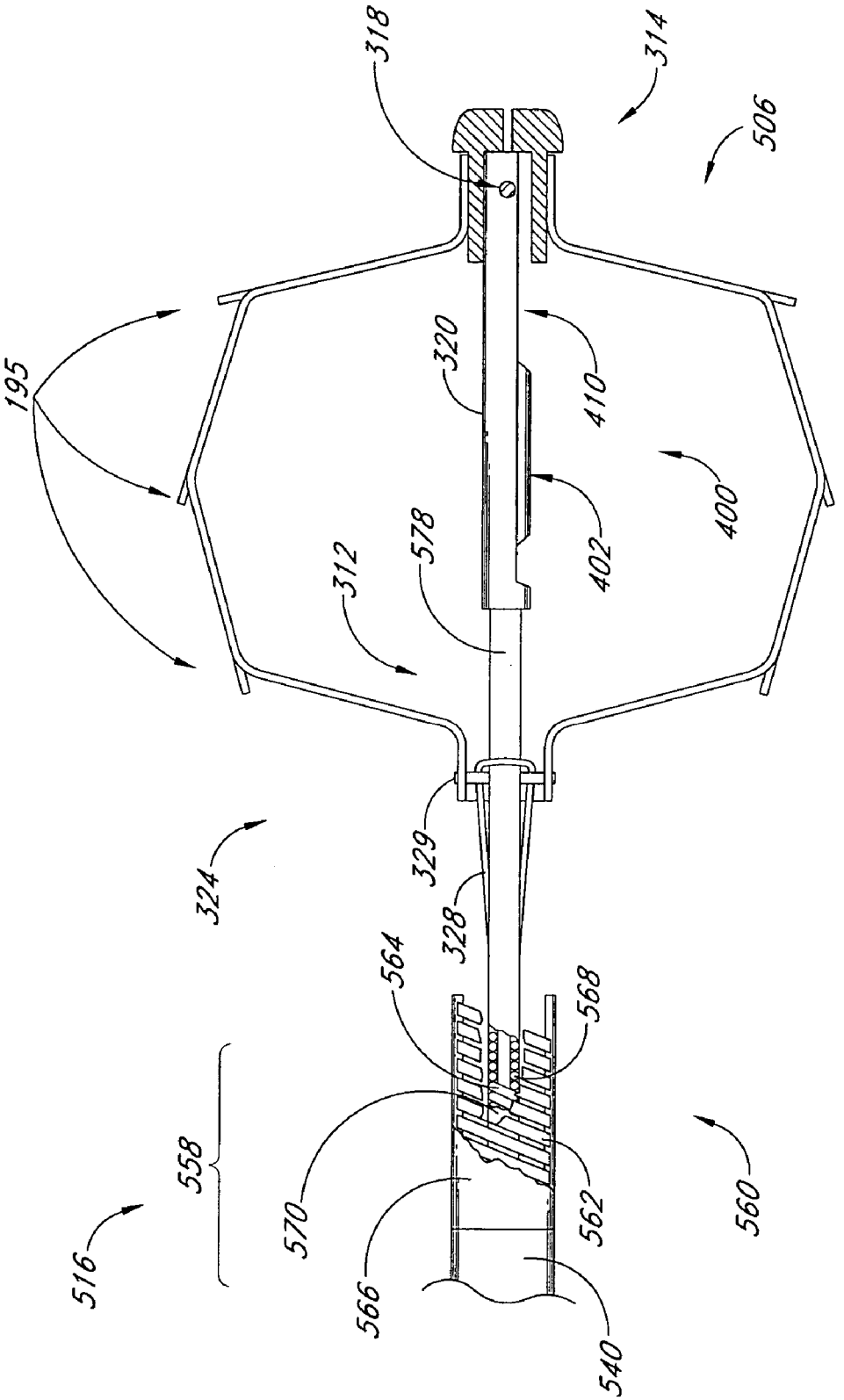
318
314
506
195
320
410
400
578
312
402
324
329
328
564
568
558
570
562
560
516
566
540

FIG. 36

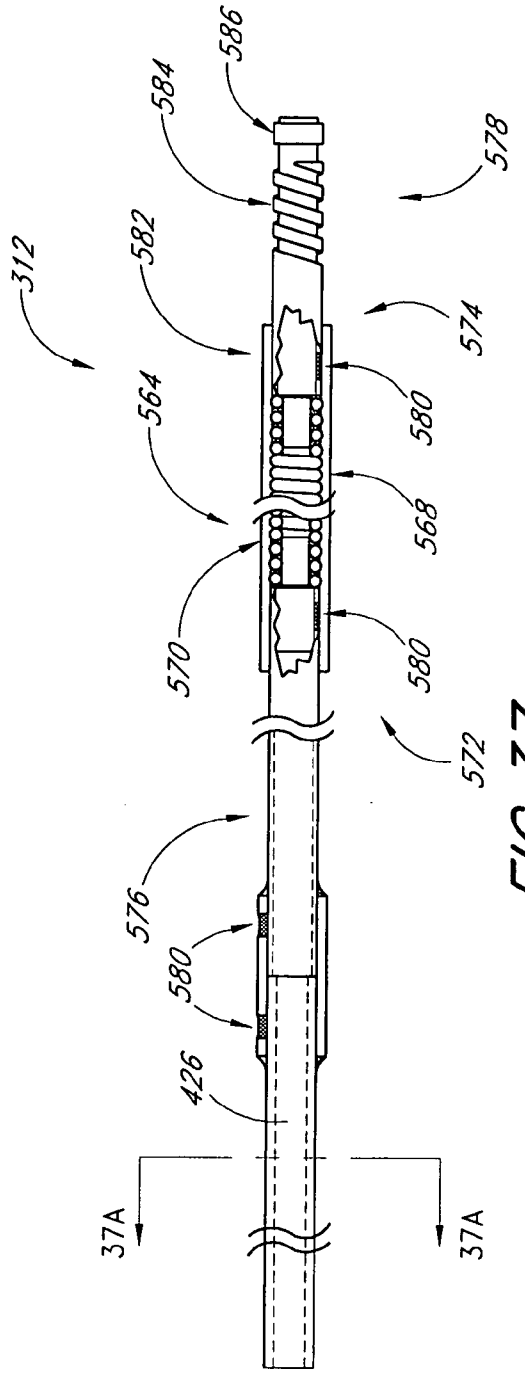

FIG. 37

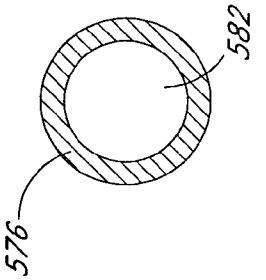

FIG. 37A

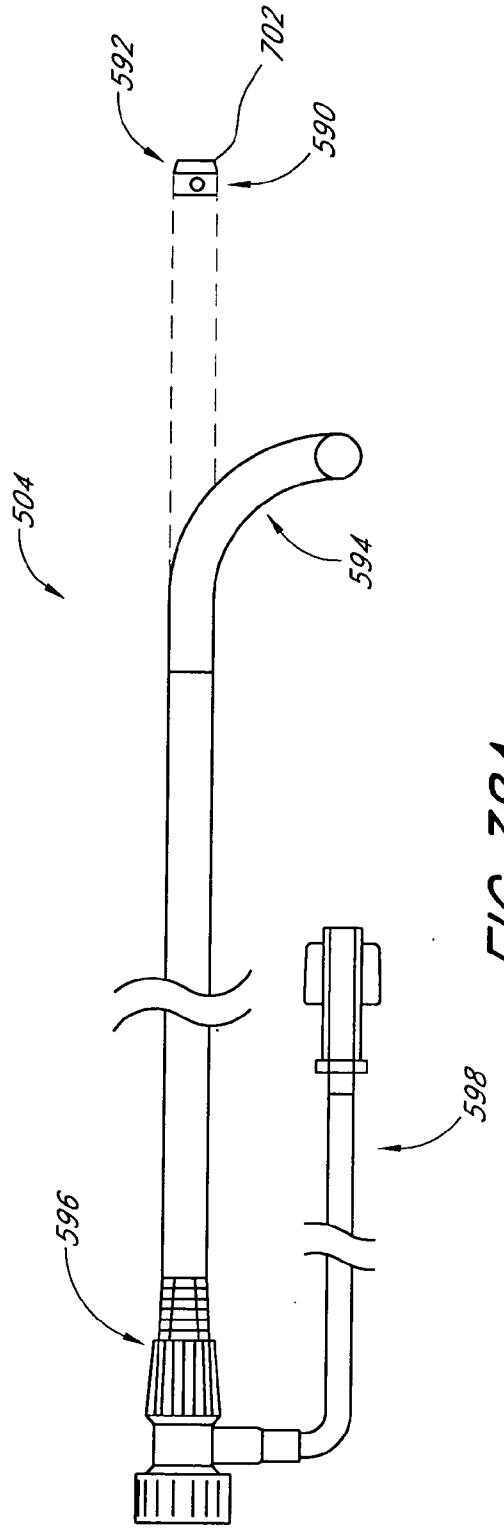

FIG. 38A

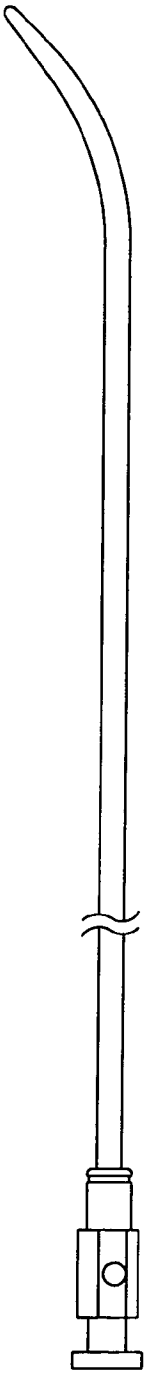

FIG. 38B



FIG. 38C

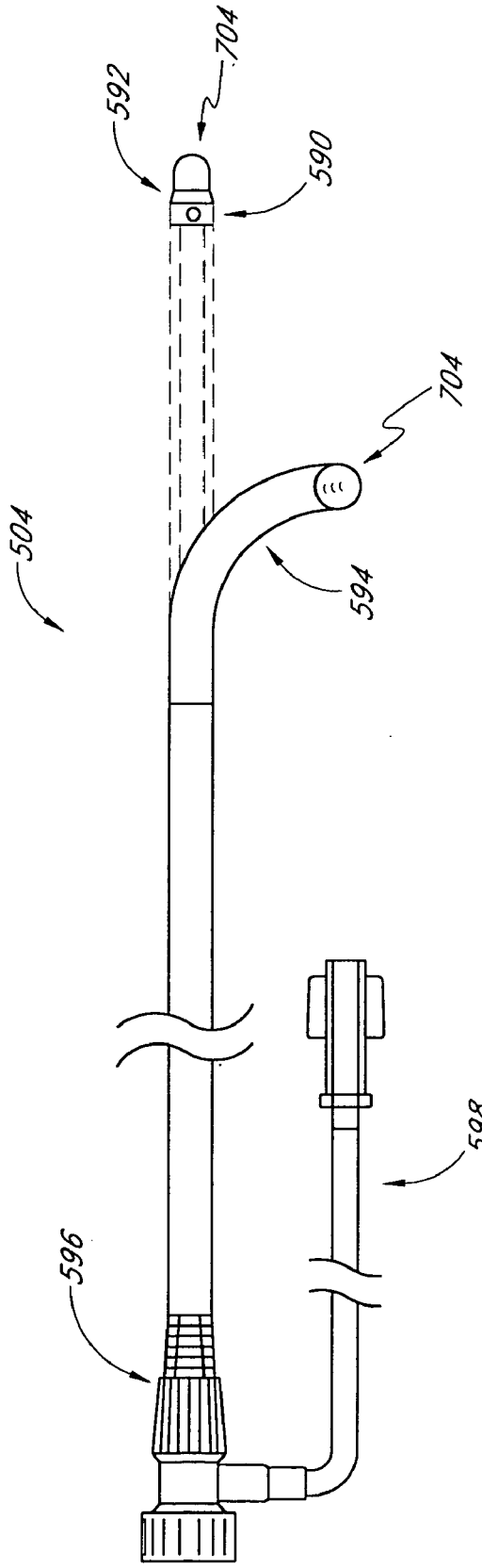

FIG. 39

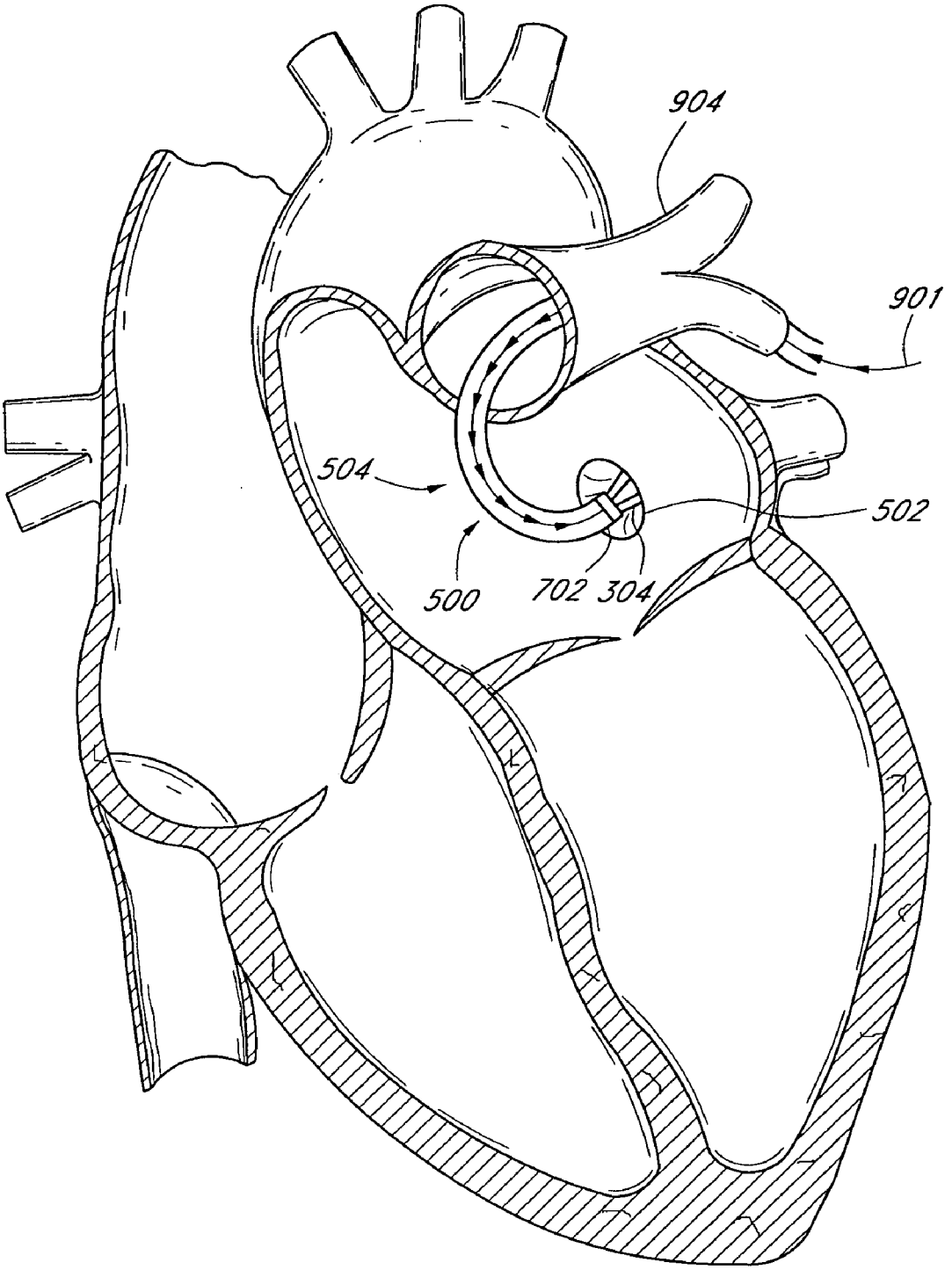

FIG. 40

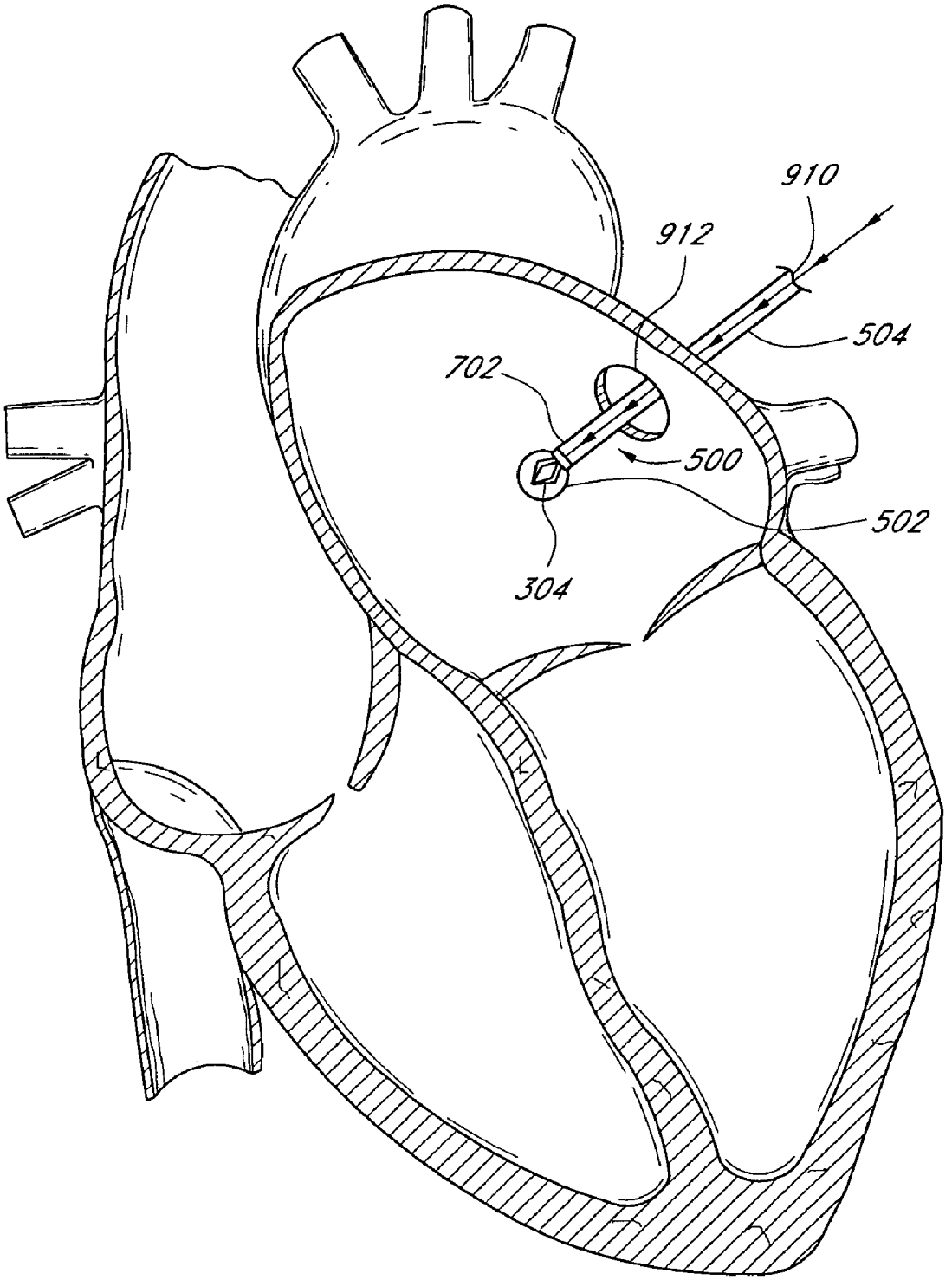

FIG. 41

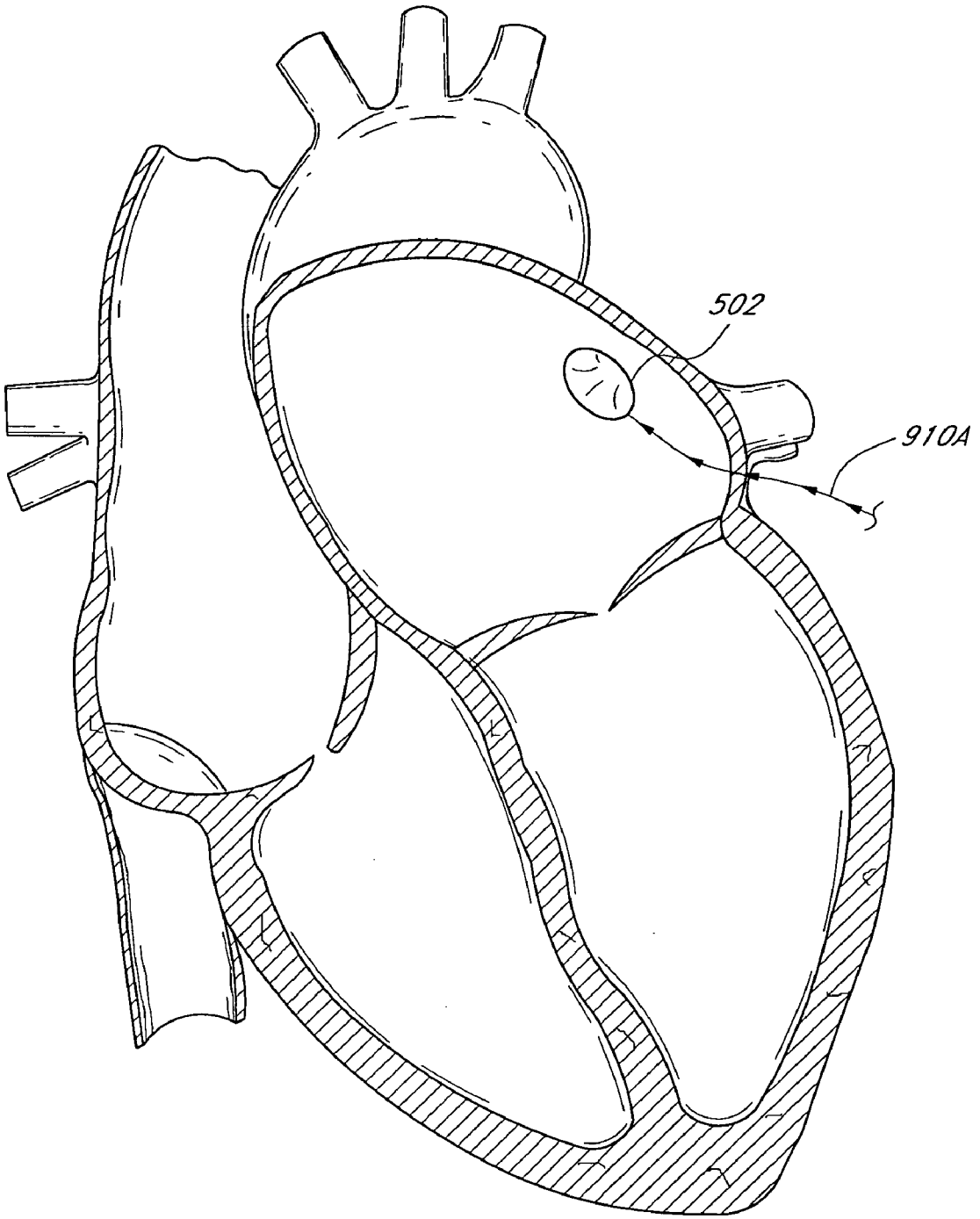

FIG. 41A

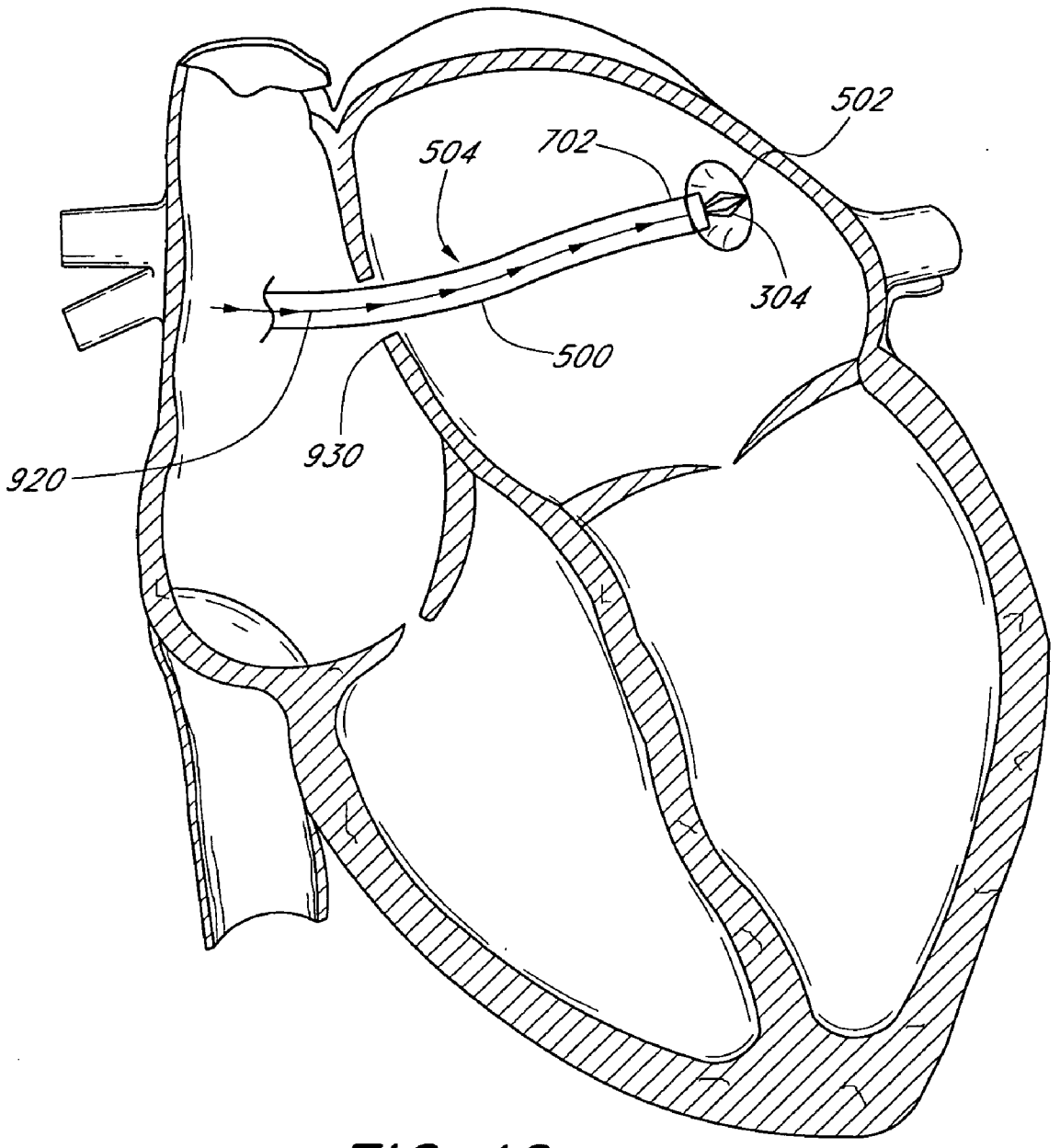

FIG. 42

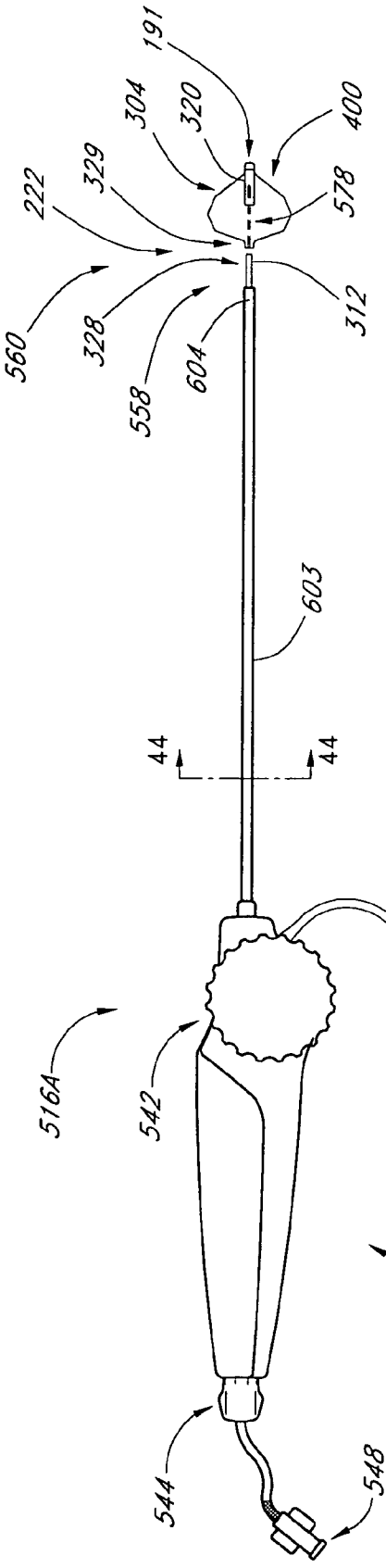
191
304
320
400
222
329
578
560
328
312
558
604
603
44
44
516A
542
546
538
500
544
548

FIG. 43

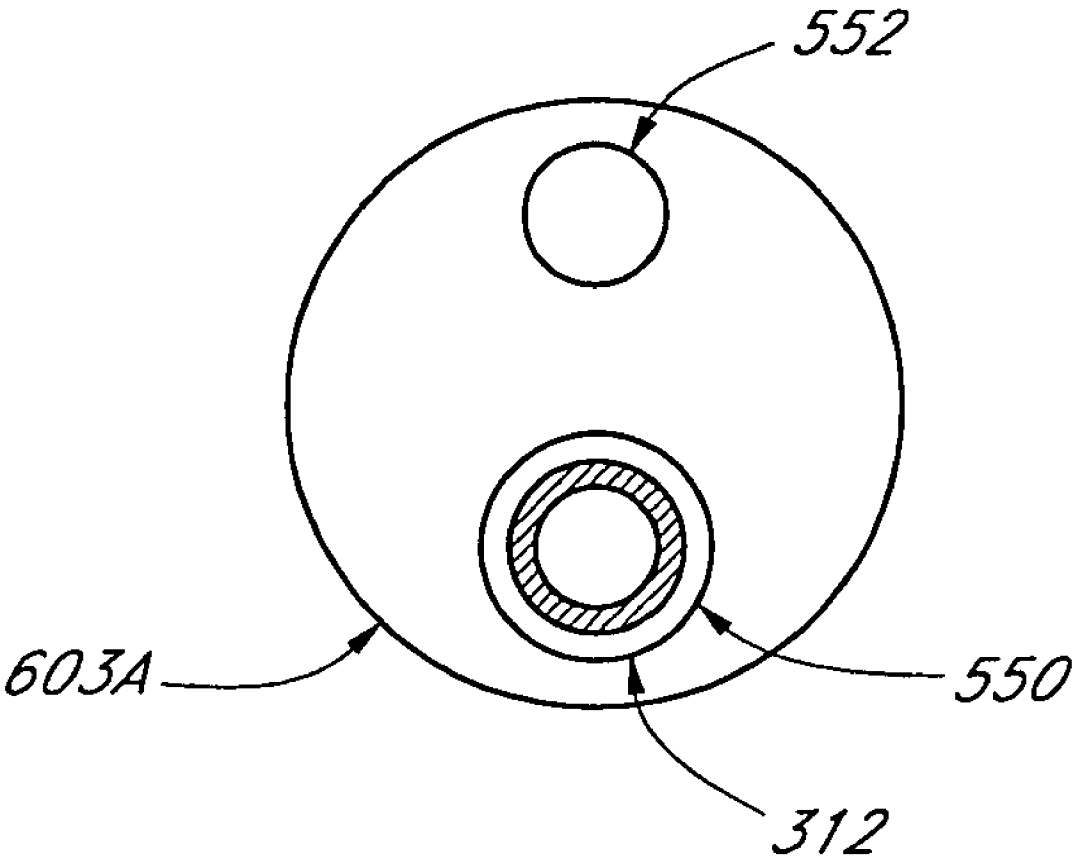

FIG. 44

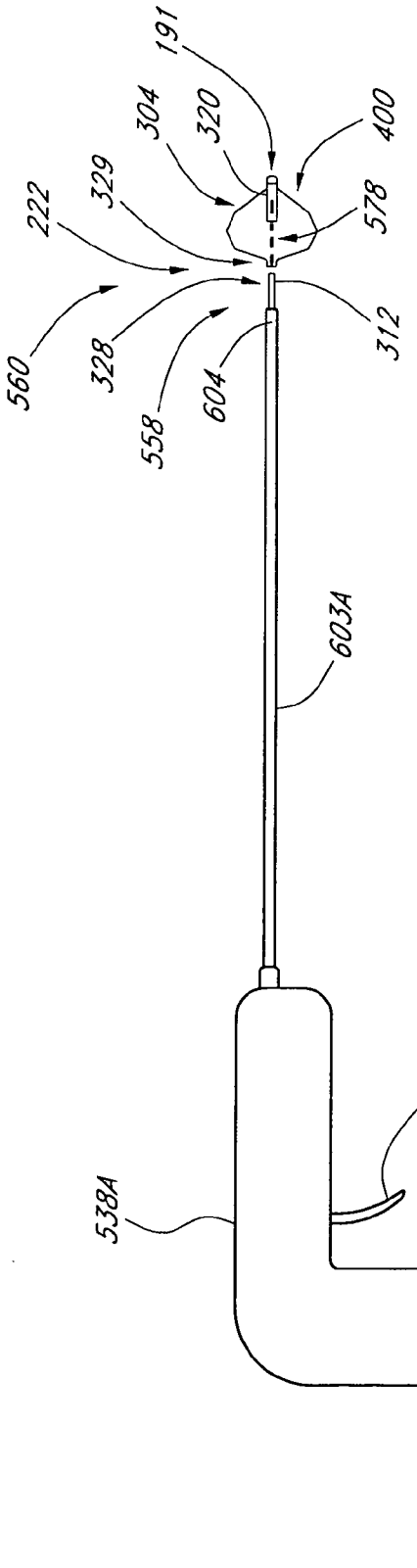
191
304
320
400
329
222
578
560
328
312
604
558
603A
612
500
538A
610

FIG. 45

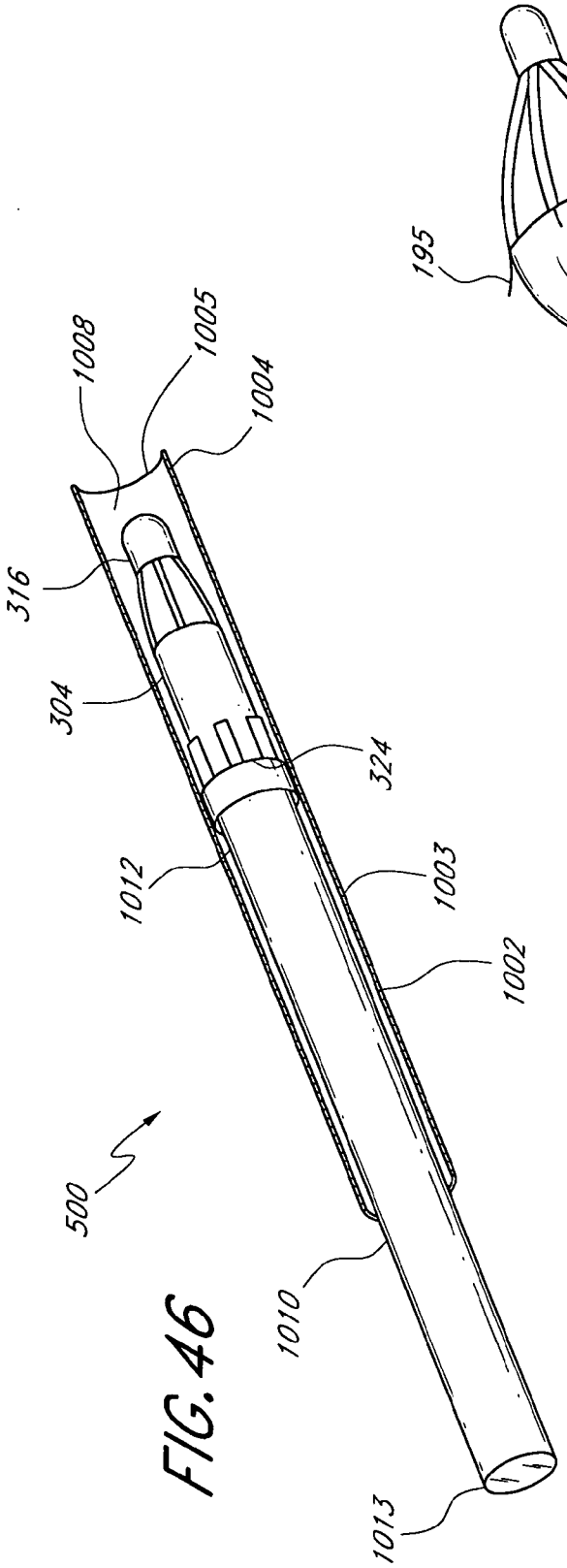
1008
1005
1004
316
304
324
1012
1003
1002
500
1010
1013

FIG. 46

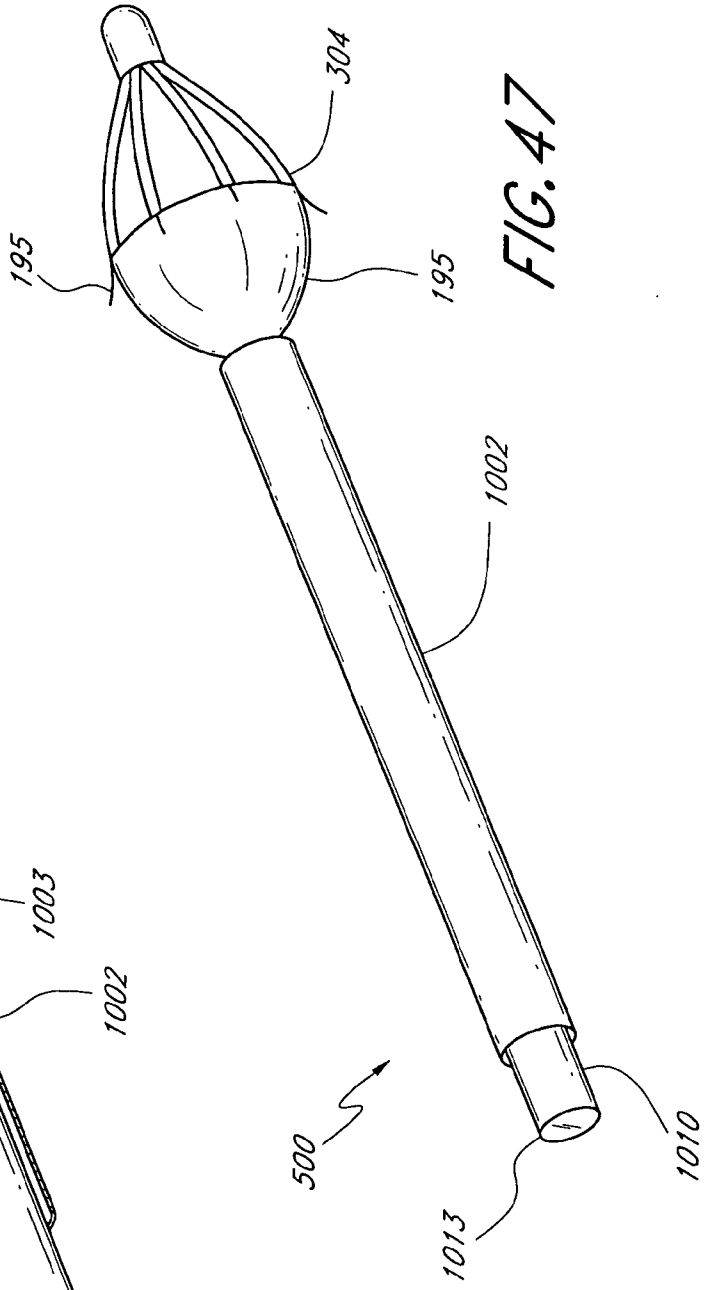
304
195
195
1002
500
1013
1010

FIG. 47

SYSTEM AND METHOD FOR DELIVERING A LEFT ATRIAL APPENDAGE CONTAINMENT DEVICE

RELATED APPLICATIONS

[0001] This application claims the priority benefit under 35 U.S.C. § 119(e) of the provisional application 60/526,960, filed Dec. 4, 2003, which is hereby incorporated by reference in its entirety.

BACKGROUND OF THE INVENTION

[0002] 1. Field of the Invention

[0003] Embodiments of this invention relate in general to a system and method for delivering a left atrial appendage containment device.

[0004] 2. Description of the Related Art

[0005] Embolic stroke is the nation's third leading killer for adults, and is a major cause of disability. There are over 700,000 strokes per year in the United States alone. Of these, roughly 100,000 are hemorrhagic, and 600,000 are ischemic (either due to vessel narrowing or to embolism). The most common cause of embolic stroke emanating from the heart is thrombus formation due to atrial fibrillation. Approximately 80,000 strokes per year are attributable to atrial fibrillation. Atrial fibrillation is an arrhythmia of the heart that results in a rapid and chaotic heartbeat that produces lower cardiac output and irregular and turbulent blood flow in the vascular system. There are over five million people worldwide with atrial fibrillation, with about four hundred thousand new cases reported each year. Atrial fibrillation is associated with a 500 percent greater risk of stroke due to the condition. A patient with atrial fibrillation typically has a significantly decreased quality of life due, in part, to the fear of a stroke, and the pharmaceutical regimen necessary to reduce that risk.

[0006] For patients who develop atrial thrombus from atrial fibrillation, the clot normally occurs in the left atrial appendage (LAA) of the heart. The LAA is a cavity which looks like a small finger or windsock and which is connected to the lateral wall of the left atrium between the mitral valve and the root of the left pulmonary vein. The LAA normally contracts with the rest of the left atrium during a normal heart cycle, thus keeping blood from becoming stagnant therein, but often fails to contract with any vigor in patients experiencing atrial fibrillation due to the discoordinate electrical signals associated with AF. As a result, thrombus formation is predisposed to form in the stagnant blood within the LAA.

[0007] Blackshear and Odell have reported that of the 1288 patients with non-rheumatic atrial fibrillation involved in their study, 221 (17%) had thrombus detected in the left atrium of the heart. Blackshear J L, Odell J A., Appendage Obliteration to Reduce Stroke in Cardiac Surgical Patients With Atrial Fibrillation. Ann Thorac. Surg., 1996.61(2):755-9. Of the patients with atrial thrombus, 201 (91%) had the atrial thrombus located within the left atrial appendage. The foregoing suggests that the elimination or containment of thrombus formed within the LAA of patients with atrial fibrillation would significantly reduce the incidence of stroke in those patients.

[0008] Pharmacological therapies for stroke prevention such as oral or systemic administration of warfarin or the like have been inadequate due to serious side effects of the medications and lack of patient compliance in taking the medication. Invasive surgical or thorascopic techniques have been used to obliterate the LAA, however, many patients are not suitable candidates for such surgical procedures due to a compromised condition or having previously undergone cardiac surgery. In addition, the perceived risks of even a thorascopic surgical procedure often outweigh the potential benefits. See Blackshear and Odell, above. See also Lindsay B D., Obliteration of the Left Atrial Appendage: A Concept Worth Testing, Ann Thorac. Surg., 1996.61(2):515.

[0009] During surgical procedures, such as mitral valve repair, thrombus in the left atrial appendage may leave the LAA and enter the blood stream of a patient. The thrombus in the blood stream of the patient can cause embolic stroke. There are known techniques for closing off the LAA so that thrombus cannot enter the patient's blood stream. For example, surgeons have used staples or sutures to close the orifice of the LAA, such that the closed off LAA surrounds the thrombus. Unfortunately, using staples or sutures to close off the LAA may not completely close the orifice of the LAA. Thus, thrombus may leave the LAA and enter the patient's blood stream, even though the LAA is closed with staples or sutures. Additionally, closing the orifice of the LAA by using staples or sutures may result in discontinuities, such as folds or creases, in the endocardial surface facing the left atrium. Unfortunately, blood clots may form in these discontinuities and can enter the patient's blood stream, thereby causing health problems. Moreover, it is difficult to place sutures at the orifice of the LAA and may result in a residual appendage. For example, an epicardial approach to ligate sutures can result in a residual appendage. Similarly, thrombus may form in the residual appendage and enter the patient's blood stream causing health problems.

[0010] Despite the various efforts in the prior art, there remains a need for a minimally invasive method and associated devices for reducing the risk of health problems (e.g., embolic stroke) related to thrombus located in the left atrial appendage.

SUMMARY OF THE INVENTION

[0011] There is provided in accordance with one embodiment of the present invention a method for containing emboli within a left atrial appendage of a patient. In one embodiment, an implant that has a frame that is expandable from a reduced cross section to an enlarged cross section is provided, the frame extending between a proximal hub and a distal hub. The frame is releasably coupled near its proximal hub to a control line extending proximally away from the proximal hub. A slider assembly is provided that is connected to the frame, the slider assembly comprising a guide tube extending proximally from the distal hub and an inner member slideably received within the guide tube, the inner member being releasably coupled to an elongate core that extends proximally through the proximal hub, wherein movement of the inner member relative to the frame is at least partially limited by interference between a portion of the inner member and a portion of the guide tube.

[0012] In one embodiment, a method provides a left atrium access path to the left atrial appendage for delivery of

a device, such as the implant discussed above. However, it will be appreciated that any suitable device may be used. A delivery sheath having a distal end can be distally advanced along the left atrium access path. The distal end of the delivery sheath is distally advanced until the delivery sheath is located proximate to an orifice of the left atrial appendage. The method provides a delivery catheter having a distal end that is coupled to the implant. The distal end of the delivery catheter that is coupled the implant is distally advanced through the delivery sheath along the left atrium access path and the implant is delivered to the left atrial appendage of the patient. The frame of the implant is expanded within the left atrial appendage by providing relative movement between the control line and the elongated core, wherein the elongated core is moveable relative to the implant while coupled to the inner member when the frame is positioned within the left atrial appendage.

[0013] In one embodiment, the delivery sheath is moved along the left atrium access path, which is located within a pulmonary vein, until the distal end of the delivery sheath is located near the LAA of the heart.

[0014] In another embodiment, the delivery sheath is moved along the left atrium access path, which is located through a hole in a wall of the left atrium, until the distal end of the delivery sheath is located near the LAA of the heart.

[0015] In another embodiment, a transseptal hole is provided and the delivery sheath is moved along the left atrium path, which is located within the right atrium and through the transseptal hole, until the distal end of the delivery sheath is located near the LAA of the heart.

[0016] In another embodiment, the left atrium is accessed by a surgical heart procedure. The delivery sheath is moved along the left atrium access path, which is located through the opening in the heart, until the distal end of the delivery sheath is located near the LAA of the heart.

[0017] In another embodiment, the left atrium is accessed by surgical heart procedure. The implant can be distally advanced along the left atrium access path, and the implant can be manually delivered to the left atrial appendage of the patient.

[0018] Further, in one preferred embodiment, a user is provided with a location of the distal end of the distally advanced delivery sheath within the left atrium of the patient by using direct visualization in the form of examination of the exterior surface of the heart, visualization through the use of echocardiography, visualization through optics including through thoracoscopes, or the use of X-ray fluoroscopy.

[0019] In another embodiment, a method of delivering a containment device to a left atrial appendage of a patient is provided. The method includes providing a left atrium access path and a delivery sheath is located along the left atrium access path. The delivery sheath has both a delivery path and a distal end. The delivery path extends along and within the delivery sheath. The delivery sheath is moved to place the distal end of the delivery sheath within the LAA of a heart. An implant is passed within the delivery sheath in a distal direction to the distal end of the delivery sheath. The implant is deployed by expanding a frame that is expandable from a reduced cross section to an enlarged cross section. In one embodiment, the implant contacts a surface of the LAA of the heart and forms a seal between the implant and the surface of the LAA.

[0020] It will be appreciated that any suitable device or instrument may be delivered to the LAA along the left atrium access path. In one embodiment, a device is delivered to the LAA as an adjunct to a surgical heart procedure (e.g., during mitral valve repair).

[0021] In some embodiments, a method is provide for delivering a device to a left atrial appendage. The method comprises forming an opening in a chest of a patient suitable for surgical heart procedures. An implantable device is advanced through the opening and into a left atrium. The implantable device is passed through the left atrium and is positioned at the left atrial appendage.

[0022] In some embodiments, a method is provided for delivering a device to a left atrial appendage. The method comprises forming an aperture in the outer wall of a left atrium of a heart. A delivery sheath is advanced through the aperture and into the left atrium. A distal end of the delivery sheath is positioned proximate to an orifice of the left atrial appendage while the delivery sheath extends through the left atrium and the aperture. A device is advanced through the delivery sheath and out of the distal end. The device is implanted at the left atrial appendage.

[0023] In some embodiments, a method is provided for delivering a device to a left atrial appendage. The method comprises providing a delivery sheath having a lumen and a distal end and a transition catheter having a tip configured to reduce injury to a patient. The delivery sheath and transition catheter are advanced along the right atrium and through a transseptal hole and into the left atrium until a distal end of the delivery sheath is proximate to an orifice of a left atrial appendage. The transition catheter is removed from the delivery sheath. The device is distally advanced a through the delivery sheath. The device is implanted at the left atrial appendage while the distal end of the delivery sheath is disposed within the left atrial appendage.

[0024] In some embodiments, a method is provided for delivering a device to a left atrial appendage. The method comprises providing a left atrium access path through a pulmonary vein to a left atrial appendage. A delivery sheath is advanced along the left atrium access path until the delivery sheath is located proximate to the left atrial appendage. An implant is advanced through the delivery sheath until the implant passes out of a distal end of the delivery sheath. The device is implanted at the left atrial appendage.

[0025] In some embodiments, a system for delivering a device to the left atrial appendage comprises an implant sized and configured to prevent passage of embolic material from a left atrial appendage. A delivery sheath defines a lumen and a distal end. A transition catheter has an atraumatic tip and is configured to slide through the lumen of the delivery sheath. The transition catheter is adapted to extend from the distal end of the delivery sheath when the distal end is proximate to the left atrial appendage. A delivery catheter is removably coupled to the implant. The delivery catheter and implant are configured to pass through the lumen of the delivery sheath to the left atrial appendage.

[0026] In some embodiments, a system for delivering a device to the left atrial appendage comprises an implant

sized and configured to prevent passage of embolic material from a left atrial appendage. A delivery device is configured to carry the implant to the left atrial appendage. The delivery device has a length configured to access the left atrial appendage through an opening in a chest of a patient. The delivery device has a length of about 80 cm or less.

[0027] In some embodiments, a system for delivering a device into the left atrial appendage comprises an implant sized and configured to prevent passage of embolic material from a left atrial appendage. A delivery device is configured to carry the implant to the left atrial appendage. The delivery device has a length configured to access the left atrial appendage through an opening in a chest of a patient. The system further comprises means for providing surgical access to the left atrial appendage through the chest of the patient.

[0028] In some embodiments, a system for delivering a device into the left atrial appendage of a patient comprises an implant sized and configured to prevent passage of embolic material from a left atrial appendage. A delivery device is configured to carry the implant to the left atrial appendage. The delivery device has a length configured to access the left atrial appendage through an opening in a chest of a patient. The system further comprises a means for performing a surgical heart procedure in the heart of the patient.

[0029] In some embodiments, a system for delivering a device to the left atrial appendage comprises an implant sized and configured to prevent passage of embolic material from a left atrial appendage. A delivery device is configured to carry the implant to the left atrial appendage. The delivery device is sized and configured to access the left atrial appendage through a pulmonary vein. The delivery device has a length of about 50 cm or less.

[0030] In some, embodiments, a kit can be provided suitable for delivering a device to the left atrial appendage. For example, the kit can comprise the devices, apparatuses, and/or systems described herein. The kit may optionally comprise packaging configured to receive a system configured to deliver a device to the left atrial appendage and/or instructions.

BRIEF DESCRIPTION OF THE DRAWINGS

[0031] **FIG. 1** is a perspective view of a containment device in accordance with one embodiment of the present invention;

[0032] **FIG. 2** is a side elevational view of the containment device shown in **FIG. 1**;

[0033] **FIG. 3** is a perspective view of a containment device in accordance with an alternate embodiment of the present invention;

[0034] **FIG. 4** is a side elevational view of the embodiment shown in **FIG. 3**;

[0035] **FIG. 5** is a perspective view of a containment device in accordance with a further embodiment of the present invention;

[0036] **FIG. 6** is a side elevational view of the embodiment of **FIG. 5**;

[0037] **FIG. 7** is a perspective view of a support structure for a containment device in accordance with a further embodiment of the present invention;

[0038] **FIG. 7A** is a side elevational view of the device of **FIG. 7**;

[0039] **FIG. 7B** is an end view taken along the line 7B-7B of **FIG. 7A**;

[0040] **FIG. 8** is a schematic illustration of an inflatable balloon positioned within the containment device of **FIG. 7**;

[0041] **FIG. 9** is a schematic view of a pull string deployment embodiment of the containment device of **FIG. 7**;

[0042] **FIGS. 10 and 11** are side elevational schematic representations of partial and complete barrier layers on the containment device of **FIG. 7**;

[0043] **FIG. 12** is a side elevational schematic view of an alternate containment device in accordance with another embodiment of the present invention;

[0044] **FIG. 13** is a schematic view of a bonding layer mesh for use in forming a composite barrier membrane in accordance with an embodiment of the present invention;

[0045] **FIG. 14** is an exploded cross sectional view of the components of a composite barrier member in accordance with an embodiment of the present invention;

[0046] **FIG. 15** is a cross sectional view through a composite barrier formed from the components illustrated in **FIG. 14**;

[0047] **FIG. 16** is a top plan view of the composite barrier illustrated in **FIG. 15**;

[0048] **FIG. 17** is a schematic view of a deployment system in accordance with one embodiment of the present invention;

[0049] **FIG. 17A** is an enlarged view of the deployment system of **FIG. 17**, showing a releasable lock in an engaged configuration;

[0050] **FIG. 17B** is an enlarged view as in **FIG. 17A**, with a core axially retracted to release the implant;

[0051] **FIG. 18** is a perspective view of a flexible guide tube for use in the configurations of **FIG. 17** and/or **FIG. 19**;

[0052] **FIG. 19** is a schematic view of an alternate deployment system in accordance with one embodiment of the present invention;

[0053] **FIGS. 19A-19B** illustrate a removal sequence for an implanted device in accordance with one embodiment of the present invention;

[0054] **FIG. 20** is a schematic cross sectional view through the distal end of a retrieval catheter having a containment device removably connected thereto;

[0055] **FIG. 20A** is a schematic cross sectional view of the system illustrated in **FIG. 20**, with the containment device axially elongated and radially reduced;

[0056] **FIG. 20B** is a cross sectional schematic view as in **FIG. 20A**, with the containment device drawn part way into the delivery catheter;

[0057] **FIG. 20C** is a schematic view as in **FIG. 20B**, with the containment device and delivery catheter drawn into a delivery sheath;

[0058] **FIG. 21** is a schematic cross sectional view of a distal portion of an adjustable implant deployment system;

[0059] **FIG. 21A** is a schematic cross sectional view of a slider assembly for use with the adjustable implant deployment system of **FIG. 21**;

[0060] **FIG. 21B** is a cross sectional view of the slider assembly of **FIG. 21A** taken along cut line **21B-21B**;

[0061] **FIG. 21C** is a perspective view of the slider assembly of **FIG. 21** shown coupled to an axially moveable core;

[0062] **FIG. 21D** is a partial cut away view of the slider assembly of **FIG. 21C** showing the position of the axially moveable core with respect to the slider nut of the slider assembly;

[0063] **FIG. 21E** is a partial cut away view of the slider assembly of **FIG. 21** shown coupled to the frame of a detachable implant;

[0064] **FIG. 22** is a schematic cross sectional view of a distal portion of another embodiment of an adjustable implant deployment system;

[0065] **FIG. 22A** is a schematic cross sectional view of a slider assembly for use with the adjustable implant deployment system of **FIG. 22**;

[0066] **FIG. 23** is a schematic cross sectional view of another embodiment of a slider assembly;

[0067] **FIGS. 24 and 25** are alternative cross sectional views taken along cut line A-A of **FIG. 23**;

[0068] **FIG. 26** is a schematic cross sectional view of another slider assembly for use with the adjustable implant deployment system of **FIG. 21**;

[0069] **FIG. 26A** is a schematic cross sectional view of another slider assembly for use with the adjustable implant deployment system of **FIG. 21**;

[0070] **FIG. 27** is a cross sectional view taken along cut line **27-27** of **FIG. 26**;

[0071] **FIG. 28** is a schematic cross sectional view of a slider assembly incorporating quick-disconnect functionality;

[0072] **FIG. 29** is a schematic cross sectional view of another slider assembly incorporating quick-disconnect functionality, constructed in accordance with another embodiment of the present invention;

[0073] **FIG. 29A** is a side elevational view of a bayonet mount coupling the guide tube of the slider assembly of an implant to an axial moveable core, in accordance with one embodiment of the present invention;

[0074] **FIG. 29B** is a side elevational view of the axially moveable core of **FIG. 29A**;

[0075] **FIG. 29C** is an end view of the axially moveable core of **FIG. 29A**;

[0076] **FIG. 29D** is an end view of the guide tube of the slider assembly of the implant of **FIG. 29A**;

[0077] **FIG. 29E** is a side elevational view of one embodiment of a maze-type slotted guide tube in accordance with one embodiment of the present invention;

[0078] **FIG. 29F** is a side elevational view of another embodiment of a maze-type slotted guide tube in accordance with one embodiment of the present invention;

[0079] **FIG. 29G** is an end view of an axially moveable core in accordance with another embodiment of the present invention;

[0080] **FIG. 29H** is one embodiment of a key mount coupling a first and second portion of an axially moveable core in accordance with one embodiment of the present invention;

[0081] **FIG. 29I** is a schematic cross sectional view of the key mount of **FIG. 29H** taken along cut line **29I-291**;

[0082] **FIG. 30** is a schematic view of a deployment system delivering an implantable containment device to the left atrial appendage;

[0083] **FIG. 31** is a schematic cross sectional view of an implantable containment device built in accordance with one embodiment of the present invention;

[0084] **FIG. 32** is a schematic view of a delivery system constructed in accordance with one embodiment of the present invention;

[0085] **FIG. 32A** is a cross sectional view of a deployment catheter as shown in **FIG. 32**, taken along cut line **32A-32A**.

[0086] **FIG. 33** is a schematic view of the delivery system of **FIG. 32**, shown attached to an implantable containment device;

[0087] **FIGS. 34A and 34B** are a schematic cross sectional view and an end view, respectively, of a loading collar used in the system of **FIG. 32**;

[0088] **FIG. 35** is a schematic view of a recapture sheath used in the system of **FIG. 32**;

[0089] **FIG. 36** is an enlarged partial cross sectional view of the deployment system of **FIG. 32**;

[0090] **FIG. 37** is a partial cross sectional view of an axially moveable core used in the system of **FIG. 32**;

[0091] **FIG. 37A** is a cross sectional view of the axially moveable core of **FIG. 37** taken along cut line **37A-37A**;

[0092] FIGS. **38A-C** are a schematic view of a delivery sheath used in combination with the system of **FIG. 32**;

[0093] **FIG. 39** is a schematic view of a delivery sheath and a transition catheter used in combination with the system of **FIG. 32**;

[0094] **FIG. 40** is a view of a heart and a delivery sheath located along the pulmonary vein;

[0095] **FIG. 41** is a view of a heart and a delivery sheath through an opening of the left atrium;

[0096] **FIG. 41A** is a view of an open heart and a delivery path;

[0097] **FIG. 42** is a view of the heart and a delivery sheath located within the right atrium and passing through a transseptal puncture;

[0098] **FIG. 43 a** schematic view of a delivery system attached to an implantable containment device in accordance with another embodiment;

[0099] **FIG. 44** is a cross sectional view of a deployment catheter as shown in **FIG. 43**, taken along cut line **44-44**;

[0100] **FIG. 45 a** schematic view of a delivery system attached to an implantable containment device in accordance with another embodiment;

[0101] **FIG. 46** is a partial cross-sectional schematic view of a delivery system attached to an implantable containment device in accordance with another embodiment; and

[0102] **FIG. 47** is a schematic view of the delivery system shown in **FIG. 46**.

DETAILED DESCRIPTION OF THE PREFERRED EMBODIMENTS

[0103] Referring to **FIGS. 1 and 2**, there is illustrated one embodiment of an occlusion or containment device **10** in accordance with the present invention. Although the present invention will be described primarily in the context of an occlusion device, the present inventors also contemplate omitting the fabric cover or enlarging the pore size to produce implantable filters or other devices which are enlargeable at a remote implantation site. The terms "occlusion device" or "containment device" are intended to encompass all such devices.

[0104] The occlusion device **10** comprises an occluding member **11** comprising a frame **14** and a barrier **15**. In the illustrated embodiment, the frame **14** comprises a plurality of radially outwardly extending spokes **17** each having a length within the range of from about 0.5 cm to about 2 cm from a hub **16**. In one embodiment, the spokes have an axial length of about 1.5 cm. Depending upon the desired introduction crossing profile of the collapsed occlusion device **10**, as well as structural strength requirements in the deployed device, anywhere within the range of from about 3 spokes to about 40 spokes may be utilized. In some embodiments, anywhere from about 12 to about 24 spokes are utilized, and, 18 spokes are utilized in one embodiment.

[0105] The spokes are advanceable from a generally axially extending orientation such as to fit within a tubular introduction catheter to a radially inclined orientation as illustrated in **FIG. 1** and **FIG. 2** following deployment from the catheter. In a self-expandable embodiment, the spokes are biased radially outwardly such that the occlusion member expands to its enlarged, implantation cross-section under its own bias following deployment from the catheter. Alternatively, the occlusion member may be enlarged using any of a variety of enlargement structures such as an inflatable balloon, or a catheter for axially shortening the occlusion member, as is discussed further below.

[0106] Preferably, the spokes comprise a metal such as stainless steel, nitinol, Elgiloy, or others which can be determined through routine experimentation by those of skill in the art. Wires having a circular or rectangular cross-section may be utilized depending upon the manufacturing technique. In one embodiment, rectangular cross section spokes are cut such as by known laser cutting techniques from tube stock, a portion of which forms the hub **16**.

[0107] The barrier **15** may comprise any of a variety of materials which facilitate cellular in-growth, such as ePTFE. The suitability of alternate materials for barrier **15** can be determined through routine experimentation by those of skill in the art. The barrier **15** may be provided on either one or both axially facing sides of the occlusion member. In one embodiment, the barrier **15** comprises two layers, with one layer on each side of the frame **14**. The two layers may be bonded to each other around the spokes **17** in any of a variety of ways, such as by heat bonding with or without an intermediate bonding layer such as polyethylene or FEP, adhesives, sutures, and other techniques which will be apparent to those of skill in the art in view of the disclosure herein. The barrier **15** preferably has a thickness of no more than about 0.006" and a porosity within the range of from about 5 μm to about 60 μm.

[0108] The barrier **15** in one embodiment preferably is securely attached to the frame **14** and retains a sufficient porosity to facilitate cellular ingrowth and/or attachment. One method of manufacturing a suitable composite membrane barrier **15** is illustrated in **FIGS. 13-16**. As illustrated schematically in **FIG. 13**, a bonding layer **254** preferably comprises a mesh or other porous structure having an open surface area within the range of from about 10% to about 90%. Preferably, the open surface area of the mesh is within the range of from about 30% to about 60%. The opening or pore size of the bonding layer **254** is preferably within the range of from about 0.005 inches to about 0.050 inches, and, in one embodiment, is about 0.020 inches. The thickness of the bonding layer **254** can be varied widely, and is generally within the range of from about 0.0005 inches to about 0.005 inches. In a preferred embodiment, the bonding layer **254** has a thickness of about 0.001 to about 0.002 inches. One suitable polyethylene bonding mesh is available from Smith and Nephew, under the code SN9.

[0109] Referring to **FIG. 14**, the bonding layer **254** is preferably placed adjacent one or both sides of a spoke or other frame element **14**. The bonding layer **254** and frame **14** layers are then positioned in-between a first membrane **250** and a second membrane **252** to provide a composite membrane stack. The first membrane **250** and second membrane **252** may comprise any of a variety of materials and thicknesses, depending upon the desired functional result. Generally, the membrane has a thickness within the range of from about 0.0005 inches to about 0.010 inches. In one embodiment, the membranes **250** and **252** each have a thickness on the order of from about 0.001 inches to about 0.002 inches, and comprise porous ePTFE, having a porosity within the range of from about 10 microns to about 100 microns.

[0110] The composite stack is heated to a temperature of from about 200° F. to about 300° F., for about 1 minute to about 5 minutes under pressure to provide a finished composite membrane assembly with an embedded frame **14** as illustrated schematically in **FIG. 15**. The final composite membrane has a thickness within the range of from about 0.001 inches to about 0.010 inches, and, preferably, is about 0.002 to about 0.003 inches in thickness. However, the thicknesses and process parameters of the foregoing may be varied considerably, depending upon the materials of the bonding layer **254** the first layer **250** and the second layer **252**.

[0111] As illustrated in top plan view in **FIG. 16**, the resulting finished composite membrane has a plurality of "unbonded" windows or areas **256** suitable for cellular attachment and/or ingrowth. The attachment areas **256** are bounded by the frame **14** struts, and the cross-hatch or other wall pattern formed by the bonding layer **254**. Preferably, a regular window **256** pattern is produced in the bonding layer **254**.

[0112] The foregoing procedure allows the bonding mesh to flow into the first and second membranes **250** and **252** and gives the composite membrane **15** greater strength (both tensile and tear strength) than the components without the bonding mesh. The composite allows uniform bonding while maintaining porosity of the membrane **15**, to facilitate tissue attachment. By flowing the thermoplastic bonding layer into the pores of the outer mesh layers **250** and **252**, the composite flexibility is preserved and the overall composite layer thickness can be minimized.

[0113] Referring back to **FIGS. 1 and 2**, the occlusion device **10** may be further provided with a bulking element or stabilizer **194**. The stabilizer **194** may be spaced apart along an axis from the occluding member **11**. In the illustrated embodiment, a distal end **190** and a proximal end **192** are identified for reference. The designation proximal or distal is not intended to indicate any particular anatomical orientation or deployment orientation within the deployment catheter. As shown in **FIGS. 1 and 2**, the stabilizer **194** is spaced distally apart from the occluding member **11**.

[0114] For use in the LAA, the occluding member **11** has an expanded diameter within the range of from about 1 cm to about 5 cm, and, in one embodiment, about 3 cm. The axial length of the occluding member **11** in an expanded, unstressed orientation from the distal end **192** to the hub **16** is on the order of about 1 cm. The overall length of the occlusion device **10** from the distal end **192** to the proximal end **190** is within the range of from about 1.5 cm to about 4 cm and, in one embodiment, about 2.5 cm. The axial length of the stabilizer **194** between distal hub **191** and proximal hub **16** is within the range of from about 0.5 cm to about 2 cm, and, in one embodiment, about 1 cm. The expanded diameter of the stabilizer **194** is within the range of from about 0.5 cm to about 2.5 cm, and, in one embodiment, about 1.4 cm. The outside diameter of the distal hub **191** and proximal hub **16** is about 2.5 mm.

[0115] Preferably, the occlusion device **10** is provided with one or more retention structures for retaining the device in the left atrial appendage or other body cavity or lumen. In the illustrated embodiment, a plurality of barbs or other anchors **195** are provided, for engaging adjacent tissue to retain the occlusion device **10** in its implanted position and to limit relative movement between the tissue and the occlusion device. The illustrated anchors are provided on one or more of the spokes **17**, or other portion of frame **14**. Preferably, every spoke, every second spoke or every third spoke are provided with one or two or more anchors each.

[0116] The illustrated anchor is in the form of a barb, with one on each spoke for extending into tissue at or near the opening of the LAA. Depending upon the embodiment, two or three barbs may alternatively be desired on each spoke. In the single barb embodiment of **FIG. 7**, each barb is inclined in a proximal direction. This is to inhibit proximal migration of the implant out of the left atrial appendage. In this context, distal refers to the direction into the left atrial appendage, and proximal refers to the direction from the left atrial appendage into the heart.

[0117] Alternatively, one or more barbs may face distally, to inhibit distal migration of the occlusion device deeper into the LAA. Thus the implant may be provided with at least one proximally facing barb and at least one distally facing barb. For example, in an embodiment of the type illustrated in **FIG. 12**, discussed below, a proximal plurality of barbs may be inclined in a first direction, and a distal plurality of barbs may be inclined in a second direction, to anchor the implant against both proximal and distal migration.

[0118] One or more anchors **195** may also be provided on the stabilizer **194**, such that it assists not only in orienting the occlusion device **10** and resisting compression of the LAA, but also in retaining the occlusion device **10** within the LAA. Any of a wide variety of structures may be utilized for anchor **195**, either on the occluding member **11** or the stabilizer **194** or both, such as hooks, barbs, pins, sutures, adhesives, ingrowth surfaces and others which will be apparent to those of skill in the art in view of the disclosure herein.

[0119] In use, the occlusion device **10** is preferably positioned within a tubular anatomical structure to be occluded such as the left atrial appendage. In a left atrial appendage application, the occluding member **11** is positioned across or near the opening to the LAA and the stabilizer **194** is positioned within the LAA. The stabilizer **194** assists in the proper location and orientation of the occluding member **11**, as well as resists compression of the LAA behind the occluding member **11**. The present inventors have determined that following deployment of an occluding member **11** without a stabilizer **194** or other bulking structure to resist compression of the LAA, normal operation of the heart may cause compression and resulting volume changes in the LAA, thereby forcing fluid past the occluding member **11** and inhibiting or preventing a complete seal. Provision of a stabilizer **194** dimensioned to prevent the collapse or pumping of the LAA thus minimizes leakage, and provision of the barbs facilitates endothelialization or other cell growth across the occluding member **11**.

[0120] The stabilizer **194** is preferably movable between a reduced cross-sectional profile for transluminal advancement into the left atrial appendage, and an enlarged cross-sectional orientation as illustrated to fill or to substantially fill a cross-section through the LAA. The stabilizing member may enlarge to a greater cross section than the (pre-stretched) anatomical cavity, to ensure a tight fit and minimize the likelihood of compression. One convenient construction includes a plurality of elements **196** which are radially outwardly expandable in response to axial compression of a distal hub **191** towards a proximal hub **16**. Elements **196** each comprise a distal segment **198** and a proximal segment **202** connected by a bend **200**. The elements **196** may be provided with a bias in the direction of the radially enlarged orientation as illustrated in **FIG. 2**, or may be radially expanded by applying an expansion force such as an axially compressive force between distal hub **191** and proximal hub **16** or a radial expansion force such as might be applied by an inflatable balloon. Elements **196** may conveniently be formed by laser cutting the same tube stock as utilized to construct the distal hub **191**, proximal hub **16** and

frame **14**, as will be apparent to those of skill in the art in view of the disclosure herein. Alternatively, the various components of the occlusion device **10** may be separately fabricated or fabricated in subassemblies and secured together during manufacturing.

[**0121**] As a post implantation step for any of the occlusion devices disclosed herein, a radiopaque dye or other visualizeable media may be introduced on one side or the other of the occlusion device, to permit visualization of any escaped blood or other fluid past the occlusion device. For example, in the context of a left atrial appendage application, the occlusion device may be provided with a central lumen or other capillary tube or aperture which permits introduction of a visualizeable dye from the deployment catheter through the occlusion device and into the entrapped space on the distal side of the occlusion device. Alternatively, dye may be introduced into the entrapped space distal to the occlusion device such as by advancing a small gauge needle from the deployment catheter through the barrier **15** on the occlusion device, to introduce dye.

[**0122**] Modifications to the occlusion device **10** are illustrated in **FIGS. 3-4**. The occlusion device **10** comprises an occlusion member **11** and a stabilizing member **194** as previously discussed. In the present embodiment, however, each of the distal segments **198** inclines radially outwardly in the proximal direction and terminates in a proximal end **204**. The proximal end **204** may be provided with an atraumatic configuration, for pressing against, but not penetrating, the wall of the left atrial appendage or other tubular body structure. Three or more distal segments **198** are preferably provided, and generally anywhere within the range of from about 6 to about 20 distal segments **198** may be used. In one embodiment, 9 distal segments **198** are provided. In this embodiment, three of the distal segments **198** have an axial length of about 5 mm, and 6 of the distal segments **198** have an axial length of about 1 cm. Staggering the lengths of the distal segments **198** may axially elongate the zone in the left atrial appendage against which the proximal ends **204** provide anchoring support for the occlusion device.

[**0123**] The occlusion device **10** illustrated in **FIGS. 3 and 4** is additionally provided with a hinge **206** to allow the longitudinal axis of the occlusion member **11** to be angularly oriented with respect to the longitudinal axis of the stabilizing member **194**. In the illustrated embodiment, the hinge **206** is a helical coil, although any of a variety of hinge structures can be utilized. The illustrated embodiment may be conveniently formed by laser cutting a helical slot through a section of the tube from which the principal structural components of the occlusion device **10** are formed. At the distal end of the hinge **206**, an annular band **208** connects the hinge **206** to a plurality of axially extending struts **210**. In the illustrated embodiment, three axial struts **210** are provided, spaced equilaterally around the circumference of the body. Axial struts **210** may be formed from a portion of the wall of the original tube stock, which portion is left in its original axial orientation following formation of the distal segments **198** such as by laser cutting from the tubular wall.

[**0124**] The occlusion member **11** is provided with a proximal zone **212** on each of the spokes **17**. Proximal zone **212** has an enhanced degree of flexibility, to accommodate the fit between the occlusion member **11** and the wall of the left atrial appendage. Proximal section **212** may be formed by reducing the cross sectional area of each of the spokes **17**, which may be provided with a wave pattern as illustrated.

[**0125**] Each of the spokes **17** terminates in a proximal point **214**. Proximal point **214** may be contained within layers of the barrier **15**, or may extend through or beyond the barrier **15** such as to engage adjacent tissue and assist in retaining the occlusion device **10** at the deployment site.

[**0126**] Referring to **FIGS. 5 and 6**, a further variation on the occlusion device **10** illustrated in **FIGS. 1 and 2** is provided. The occlusion device **10** is provided with a proximal face **216** on the occlusion member **11**, instead of the open and proximally concave face on the embodiment of **FIGS. 1 and 2**. The proximal face **216** is formed by providing a proximal spoke **218** which connects at an apex **220** to some or all of the distal spokes **17**. The proximal spoke **218**, and corresponding apex **220** and distal spoke **17** may be an integral structure, such as a single ribbon or wire, or element cut from a tube stock as has been discussed.

[**0127**] Proximal spokes **218** are each attached to a hub **222** at the proximal end **192** of the occlusion device **10**. The barrier **15** may surround either the proximal face or the distal face or both on the occlusion member **11**. In general, provision of a proximal spoke **218** connected by an apex **220** to a distal spoke **17** provides a greater radial force than a distal spoke **17** alone, which will provide an increased resistance to compression if the occlusion member **11** is positioned with the LAA.

[**0128**] Referring to **FIGS. 7-12**, alternate structures of the occlusion device in accordance with the present invention are illustrated. In general, the occlusion device **10** comprises an occluding member but does not include a distinct stabilizing member as has been illustrated in connection with previous embodiments. Any of the embodiments previously disclosed herein may also be constructed using the occluding member only, and omitting the stabilizing member as will be apparent to those of skill in the art in view of the disclosure herein.

[**0129**] The occluding device **10** comprises a proximal end **192**, a distal end **190**, and a longitudinal axis extending therebetween. A plurality of supports **228** extend between a proximal hub **222** and a distal hub **191**. At least two or three supports **228** are provided, and preferably at least about ten. In one embodiment, sixteen supports **228** are provided. However, the precise number of supports **228** can be modified, depending upon the desired physical properties of the occlusion device **10** as will be apparent to those of skill in the art in view of the disclosure herein, without departing from the present invention.

[**0130**] Each support **228** comprises a proximal spoke portion **218**, a distal spoke portion **17**, and an apex **220** as has been discussed. Each of the proximal spoke portion **218**, distal spoke portion **17** and apex **220** may be a region on an integral support **228**, such as a continuous rib or frame member which extends in a generally curved configuration as illustrated with a concavity facing towards the longitudinal axis of the occlusion device **10**. Thus, no distinct point or hinge at apex **220** is necessarily provided.

[**0131**] At least some of the supports **228**, and, preferably, each support **228**, is provided with one or two or more barbs

195. In the illustrated configuration, the occlusion device **10** is in its enlarged orientation, such as for occluding a left atrial appendage or other body cavity or lumen. In this orientation, each of the barbs **195** projects generally radially outwardly from the longitudinal axis, and is inclined in the proximal direction. One or more barbs may also be inclined distally, as is discussed elsewhere herein. In an embodiment where the barbs **195** and corresponding support **228** are cut from a single ribbon, sheet or tube stock, the barb **195** will incline radially outwardly at approximately a tangent to the curve formed by the support **228**.

[**0132**] The occlusion device **10** constructed from the frame illustrated in **FIG. 7** may be constructed in any of a variety of ways, as will become apparent to those of skill in the art in view of the disclosure herein. In one method, the occlusion device **10** is constructed by laser cutting a piece of tube stock to provide a plurality of axially extending slots in-between adjacent supports **228**. Similarly, each barb **195** can be laser cut from the corresponding support **228** or space in-between adjacent supports **228**. The generally axially extending slots which separate adjacent supports **228** end a sufficient distance from each of the proximal end **192** and distal end **190** to leave a proximal hub **222** and a distal hub **191** to which each of the supports **228** will attach. In this manner, an integral cage structure may be formed. Alternatively, each of the components of the cage structure may be separately formed and attached together such as through soldering, brazing, heat bonding, adhesives, and other fastening techniques which are known in the art. A further method of manufacturing the occlusion device **10** is to laser cut a slot pattern on a flat sheet of appropriate material, such as a flexible metal or polymer, as has been discussed in connection with previous embodiments. The flat sheet may thereafter be rolled about an axis and opposing edges bonded together to form a tubular structure.

[**0133**] The apex portion **220** which carries the barb **195** may be advanced from a low profile orientation in which each of the supports **228** extend generally parallel to the longitudinal axis, to an implanted orientation as illustrated, in which the apex **220** and the barb **195** are positioned radially outwardly from the longitudinal axis. The support **228** may be biased towards the enlarged orientation, or may be advanced to the enlarged orientation under positive force following positioning within the tubular anatomical structure, in any of a variety of manners.

[**0134**] For an example of enlarging under positive force, referring to **FIG. 8**, an inflatable balloon **230** is positioned within the occlusion device **10**. Inflatable balloon **230** is connected by way of a removable coupling **232** to an inflation catheter **234**. Inflation catheter **234** is provided with an inflation lumen for providing communication between an inflation media source **236** outside of the patient and the balloon **230**. Following positioning within the target body lumen, the balloon **230** is inflated, thereby engaging barbs **195** with the surrounding tissue. The inflation catheter **234** is thereafter removed, by decoupling the removable coupling **232**, and the inflation catheter **234** is thereafter removed. The balloon **230** may be either left in place within the occlusion device **10**, or deflated and removed by the inflation catheter **234**.

[**0135**] In an alternate embodiment, the supports **228** are radially enlarged such as through the use of a deployment catheter **238**. See **FIG. 9**. Deployment catheter **238** comprises a lumen for movably receiving a deployment element such as a flexible line **240**. Deployment line **240** extends in a loop **244** formed by an aperture or slip knot **242**. As will be apparent from **FIG. 9**, proximal retraction on the deployment line **240** while resisting proximal movement of proximal hub **222** such as by using the distal end of the catheter **238** will cause the distal hub **191** to be drawn towards the proximal hub **222**, thereby radially enlarging the cross-sectional area of the occlusion device **10**. Depending upon the material utilized for the occlusion device **10**, the supports **228** will retain the radially enlarged orientation by elastic deformation, or may be retained in the enlarged orientation such as by securing the slip knot **242** immovably to the deployment line **240** at the fully radially enlarged orientation. This may be accomplished in any of a variety of ways, using additional knots, clips, adhesives, or other techniques known in the art.

[**0136**] A variety of alternative structures may be utilized, to open or enlarge the occlusion device **10** under positive force. For example, referring to **FIG. 9**, a pull wire **240** may be removably attached to the distal hub **191** or other distal point of attachment on the occlusion device **10**. Proximal retraction of the pull wire **240** while resisting proximal motion of the proximal hub **222** such as by using the distal end of the catheter **238** will cause enlargement of the occlusion device **10** as has been discussed. The pull wire **240** may then be locked with respect to the proximal hub **222** and severed or otherwise detached to enable removal of the deployment catheter **238** and retraction of the pull wire **240**. Locking of the pull wire with respect to the proximal hub **222** may be accomplished in any of a variety of ways, such as by using interference fit or friction fit structures, adhesives, a knot or other technique depending upon the desired catheter design.

[**0137**] Referring to **FIGS. 10 and 11**, the occlusion device **10** may be provided with a barrier **15** such as a mesh or fabric as has been previously discussed. Barrier **15** may be provided on only one hemisphere such as proximal face **216**, or may be carried by the entire occlusion device **10** from proximal end **192** to distal end **190**. The barrier may be secured to the radially inwardly facing surface of the supports **228**, as illustrated in **FIG. 11**, or may be provided on the radially outwardly facing surfaces of supports **228**, or both.

[**0138**] A further embodiment of the occlusion device **10** is illustrated in **FIG. 12**, in which the apex **220** is elongated in an axial direction to provide additional contact area between the occlusion device **10** and the wall of the tubular structure. In this embodiment, one or two or three or more anchors **195** may be provided on each support **228**, depending upon the desired clinical performance. The occlusion device **10** illustrated in **FIG. 12** may also be provided with any of a variety of other features discussed herein, such as a partial or complete barrier **15**. In addition, the occlusion device **10** illustrated in **FIG. 12** may be enlarged using any of the techniques disclosed elsewhere herein.

[**0139**] Referring to **FIG. 17**, there is schematically illustrated a further embodiment of the present invention. An adjustable implant deployment system **300** comprises generally a catheter **302** for placing a detachable implant **304** within a body cavity or lumen, as has been discussed. The

catheter **302** comprises an elongate flexible tubular body **306**, extending between a proximal end **308** and a distal end **310**. The catheter is shown in highly schematic form, for the purpose of illustrating the functional aspects thereof. In one embodiment, the catheter body will have a sufficient length and diameter to permit percutaneous entry into the vascular system, and transluminal advancement through the vascular system to the desired deployment site. For example, in an embodiment intended for access at the femoral vein and deployment within the left atrial appendage, the catheter **302** will have a length within the range of from about 50 cm to about 150 cm, and a diameter of generally no more than about 15 French. Those skilled in the art recognize that the implant deployment system **300** can be configured and sized for various methods of deploying implant **304**, as described below. The catheter **302** can be sized and configured so that an implant **304** can be delivered using, for example, conventional transthoracic surgical, minimally invasive, or port access approaches. The deployment system **300** can be used to deploy the implant **304** using methods shown in **FIGS. 40-42** and described below. Further dimensions and physical characteristics of catheters for navigation to particular sites within the body are well understood in the art.

[**0140**] The tubular body **306** is further provided with a handle **309** generally on the proximal end **308** of the catheter **302**. The handle **309** permits manipulation of the various aspects of the implant deployment system **300**, as will be discussed below. Handle **309** may be manufactured in any of a variety of ways, typically by injection molding or otherwise forming a handpiece for single-hand operation, using materials and construction techniques well known in the medical device arts.

[**0141**] The implant **304** may be in the form of any of those described previously herein, as modified below. In general, the implant is movable from a reduced crossing profile to an enlarged crossing profile, such that it may be positioned within a body structure and advanced from its reduced to its enlarged crossing profile to obstruct blood flow or perform other functions while anchored therein. The implant **304** may be biased in the direction of the enlarged crossing profile, may be neutrally biased or may be biased in the direction of the reduced crossing profile. Any modifications to the device and deployment system to accommodate these various aspects of the implant **304** may be readily accomplished by those of skill in the art in view of the disclosure herein.

[**0142**] In the illustrated embodiment, the distal end **314** of the implant **304** is provided with an implant plug **316**. Implant plug **316** provides a stopping surface **317** for contacting an axially movable core **312**. The core **312** extends axially throughout the length of the catheter body **302**, and is attached at its proximal end to a core control **332** on the handle **309**.

[**0143**] The core **312** may comprise any of a variety of structures which has sufficient lateral flexibility to permit navigation of the vascular system, and sufficient axial column strength to enable reduction of the implant **304** to its reduced crossing profile. Any of a variety of structures such as hypotube, solid core wire, "bottomed out" coil spring structures, or combinations thereof may be used, depending upon the desired performance of the finished device. In one embodiment, the core **312** comprises stainless steel tubing.

[**0144**] The distal end of core **312** is positioned within a recess or lumen **322** defined by a proximally extending guide tube **320**. In the illustrated embodiment, the guide tube **320** is a section of tubing such as metal hypotube, which is attached at the distal end **314** of the implant and extends proximally within the implant **304**. The guide tube **320** preferably extends a sufficient distance in the proximal direction to inhibit buckling or prolapse of the core **312** when distal pressure is applied to the core control **332** to reduce the profile of the implant **304**. However, the guide tube **320** should not extend proximally a sufficient distance to interfere with the opening of the implant **304**.

[**0145**] As will be appreciated by reference to **FIG. 17**, the guide tube **320** may operate as a limit on distal axial advancement of the proximal end **324** of implant **304**. Thus, the guide tube **320** preferably does not extend sufficiently far proximally from the distal end **314** to interfere with optimal opening of the implant **304**. The specific dimensions are therefore relative, and will be optimized to suit a particular intended application. In one embodiment, the implant **304** has an implanted outside diameter within the range of from about 5 mm to about 45 mm, and an axial implanted length within the range of from about 5 mm to about 45 mm. The guide tube **320** has an overall length of about 3 mm to about 35 mm, and an outside diameter of about 0.095 inches.

[**0146**] An alternate guide tube **320** is schematically illustrated in **FIG. 18**. In this configuration, the guide tube **320** comprises a plurality of tubular segments **321** spaced apart by an intervening space **323**. This allows increased flexibility of the guide tube **320**, which may be desirable during the implantation step, while retaining the ability of the guide tube **320** to maintain linearity of the core **312** while under axial pressure. Although three segments **321** are illustrated in **FIG. 18**, as many as 10 or 20 or more segments **321** may be desirable depending upon the desired flexibility of the resulting implant.

[**0147**] Each adjacent pair of segments **321** may be joined by a hinge element **325** which permits lateral flexibility. In the illustrated embodiment, the hinge element **325** comprises an axially extending strip or spine, which provides column strength along a first side of the guide tube **320**. The guide tube **320** may therefore be curved by compressing or extending a second side of the guide tube **320** which is generally offset from the spine **325** by about 180°. A limit on the amount of curvature may be set by adjusting the axial length of the space **323** between adjacent segments **321**. In an embodiment having axial spines **325**, each axial spine **325** may be rotationally offset from the next adjacent axial spine **325** to enable flexibility of the overall guide tube **320** throughout a 360° angular range of motion.

[**0148**] Alternatively, the flexible hinge point between each adjacent segment **321** may be provided by cutting a spiral groove or plurality of parallel grooves in a tubular element in between what will then become each adjacent pair of segments **321**. In this manner, each tubular element **321** will be separated by an integral spring like structure, which can permit flexibility. As a further alternative, the entire length of the guide tube **320** may comprise a spring. Each of the forgoing embodiments may be readily constructed by laser cutting or other cutting from a piece of tube stock, to produce a one piece guide tube **320**. Alternatively, the guide tube **320** may be assembled from separate components and

fabricated together using any of a variety of bonding techniques which are appropriate for the construction material selected for the tube **320**.

[**0149**] Various distal end **314** constructions may be utilized, as will be apparent to those of skill in the art in view of the disclosure herein. In the illustrated embodiment, the distal implant plug **316** extends within the implant **304** and is attached to the distal end of the guide tube **320**. The implant plug **316** may be secured to the guide tube **320** and implant **304** in any of a variety of ways, depending upon the various construction materials. For example, any of a variety of metal bonding techniques such as a welding, brazing, interference fit such as threaded fit or snap fit, may be utilized. Alternatively, any of a variety of bonding techniques for dissimilar materials may be utilized, such as adhesives, and various molding techniques. In one construction, the implant plug **316** comprises a molded polyethylene cap, and is held in place utilizing a distal cross pin **318** which extends through the implant **304**, the guide tube **320** and the implant plug **316** to provide a secure fit against axial displacement.

[**0150**] The proximal end **324** of the implant **304** is provided with a releasable lock **326** for attachment to a release element such as pull wire **328**. Pull wire **328** extends proximally throughout the length of the tubular body **306** to a proximal pull wire control **330** on the handle **309**.

[**0151**] As used herein, the term pull wire is intended to include any of a wide variety of structures which are capable of transmitting axial tension or compression such as a pushing or pulling force with or without rotation from the proximal end **308** to the distal end **310** of the catheter **302**. Thus, monofilament or multifilament metal or polymeric rods or wires, woven or braided structures may be utilized. Alternatively, tubular elements such as a concentric tube positioned within the outer tubular body **306** may also be used as will be apparent to those of skill in the art.

[**0152**] In the illustrated embodiment, the pull wire **328** is releasably connected to the proximal end **324** of the implant **304**. This permits proximal advancement of the proximal end of the implant **304**, which cooperates with a distal retention force provided by the core **312** against the distal end of the implant to axially elongate the implant **304** thereby reducing it from its implanted configuration to its reduced profile for implantation. The proximal end of the pull wire **328** may be connected to any of a variety of pull wire controls **330**, including rotational knobs, levers and slider switches, depending upon the design preference.

[**0153**] The proximal end **324** of the implant **304** is thus preferably provided with a releasable lock **326** for attachment of the pull wire **328** to the deployment catheter. In the illustrated embodiment, the releasable lock is formed by advancing the pull wire distally around a cross pin **329**, and providing an eye or loop which extends around the core **312**. As long as the core **312** is in position within the implant **304**, proximal retraction of the pull wire **328** will advance the proximal end **324** of the implant **304** in a proximal direction. See **FIG. 17A**. However, following deployment, proximal retraction of the core **312** such as by manipulation of the core control **332** will pull the distal end of the core **312** through the loop on the distal end of the pull wire **328**. The pull wire **328** may then be freely proximally removed from the implant **304**, thereby enabling detachment of the implant **304** from the deployment system **300** within a treatment site. See **FIG. 17B**.

[**0154**] The implant deployment system **300** thus permits the implant **304** to be maintained in a low crossing profile configuration, to enable transluminal navigation to a deployment site. Following positioning at or about the desired deployment site, proximal retraction of the core **312**, or distal movement of full wire **528**, enables the implant **304** to radially enlarge under its own bias to fit the surrounding tissue structure. Alternatively, the implant can be enlarged under positive force, such as by inflation of a balloon or by a mechanical mechanism as is discussed elsewhere herein. Once the clinician is satisfied with the position of the implant **304**, such as by injection of dye and visualization using conventional techniques, the core **312** is proximally retracted thereby releasing the lock **326** and enabling detachment of the implant **304** from the deployment system **300**.

[**0155**] If, however, visualization reveals that the implant **304** is not at the location desired by the clinician, proximal retraction of the pull wire **328** with respect to the core **312** will radially reduce the diameter of the implant **304**, thereby enabling repositioning of the implant **304** at the desired site. Thus, the present invention permits the implant **304** to be enlarged or reduced by the clinician to permit repositioning and/or removal of the implant **304** as may be desired.

[**0156**] In an alternate construction, the implant may be radially enlarged or reduced by rotating a torque element extending throughout the deployment catheter. Referring to **FIG. 19**, the elongate flexible tubular body **306** of the deployment catheter **302** includes a rotatable torque rod **340** extending axially therethrough. The proximal end of the torque rod **340** may be connected at a proximal manifold to a manual rotation device such as a hand crank, thumb wheel, rotatable knob or the like. Alternatively, the torque rod **340** may be connected to a power driven source of rotational energy such as a motor drive or air turbine.

[**0157**] The distal end of the torque rod **340** is integral with or is connected to a rotatable core **342** which extends axially through the implant **304**. A distal end **344** of the rotatable core **342** is positioned within a cavity **322** as has been discussed.

[**0158**] The terms torque rod or torque element are intended to include any of a wide variety of structures which are capable of transmitting a rotational torque throughout the length of a catheter body. For example, solid core elements such as stainless steel, nitinol or other nickel titanium alloys, or polymeric materials may be utilized. In an embodiment intended for implantation over a guidewire, the torque rod **340** is preferably provided with an axially extending central guidewire lumen. This may be accomplished by constructing the torque rod **340** from a section of hypodermic needle tubing, having an inside diameter of from about 0.001 inches to about 0.005 inches or more greater than the outside diameter of the intended guidewire. Tubular torque rods **340** may also be fabricated or constructed utilizing any of a wide variety of polymeric constructions which include woven or braided reinforcing layers in the wall. Torque transmitting tubes and their methods of construction are well understood in the intracranial access and rotational atherectomy catheter arts, among others, and are not described in greater detail herein. Use of a tubular torque rod **340** also provides a

convenient infusion lumen for injection of contrast media within the implant **304**, such as through a port **343**.

[**0159**] The proximal end **324** of the implant **304** is provided with a threaded aperture **346** through which the core **342** is threadably engaged. As will be appreciated by those of skill in the art in view of the disclosure herein, rotation of the threaded core **342** in a first direction relative to the proximal end **324** of the implant **304** will cause the rotatable core **342** to advance distally. This distal advancement will result in an axial elongation and radial reduction of the implantable device **304**. Rotation of the rotatable core **342** in a reverse direction will cause a proximal retraction of the rotatable core **342**, thus enabling a radial enlargement and axial shortening of the implantable device **304**.

[**0160**] The deployment catheter **302** is further provided with an antirotation lock **348** between a distal end **350** of the tubular body **306** and the proximal end **324** of the implant **304**. In general, the rotational lock **348** may be conveniently provided by cooperation between a first surface **352** on the distal end **350** of the deployment catheter **302**, which engages a second surface **354** on the proximal end **324** of the implantable device **304**, to rotationally link the deployment catheter **302** and the implantable device **304**. Any of a variety of complementary surface structures may be provided, such as an axial extension on one of the first and second surfaces for coupling with a corresponding recess on the other of the first and second surfaces. Such extensions and recesses may be positioned laterally offset from the axis of the catheter. Alternatively, they may be provided on the longitudinal axis with any of a variety of axially releasable anti-rotational couplings having at least one flat such as a hexagonal or other multifaceted cross sectional configuration.

[**0161**] As schematically illustrated in **FIGS. 19A** and B, one or more projections **356** on the first surface **352** may engage a corresponding recess **358** on the second surface **354**. Any of a variety of alternative complementary surface structures may also be provided, as will be apparent to those of skill in the art in view of the disclosure herein. For example, referring to **FIG. 19A**, the projection **356** is in the form of an axially extending pin for engaging a complimentary recess **358** on the proximal end **324** of the implant **304**. **FIG. 19B** illustrates an axially extending spline **356** for receipt within a complimentary axially extending recess **358**. The various pin, spline and other structures may be reversed between the distal end of tubular body **306** and the proximal end **324** of the implant **304** as will be apparent to those of skill in the art in view of the disclosure herein.

[**0162**] Upon placement of the implantable device **304** at the desired implantation site, the torque rod **340** is rotated in a direction that produces an axial proximal retraction. This allows radial enlargement of the radially outwardly biased implantable device **304** at the implantation site. Continued rotation of the torque rod **340** will cause the threaded core **342** to exit proximally through the threaded aperture **346**. At that point, the deployment catheter **302** may be proximally retracted from the patient, leaving the implanted device **304** in place.

[**0163**] By modification of the decoupling mechanism to allow the core **342** to be decoupled from the torque rod **340**, the rotatable core **342** may be left within the implantable device **304**, as may be desired depending upon the intended deployment mechanism. For example, the distal end of the core **342** may be rotatably locked within the end cap **326**, such as by including complimentary radially outwardly or inwardly extending flanges and grooves on the distal end of the core **342** and inside surface of the cavity **322**. In this manner, proximal retraction of the core **342** by rotation thereof relative to the implantable device **304** will pull the end cap **326** in a proximal direction under positive force. This may be desirable as a supplement to or instead of a radially enlarging bias built into the implantable device **304**.

[**0164**] In the embodiment illustrated in **FIG. 19**, or any other of the deployment and/or removal catheters described herein, the distal end of the tubular body **306** may be provided with a zone or point of enhanced lateral flexibility. This may be desirable in order allow the implant to seat in the optimal orientation within the left atrial appendage, and not be restrained by a lack of flexibility in the tubular body **306**. This may be accomplished in any of a variety of ways, such as providing the distal most one or two or three centimeters or more of the tubular body **306** with a spring coil configuration. In this manner, the distal end of the tubular body **306** will be sufficiently flexible to allow the implant **304** to properly seat within the LAA. This distal flex zone on the tubular body **306** may be provided in any of a variety of ways, such as by cutting a spiral slot in the distal end of the tubular body **306** using laser cutting or other cutting techniques. The components within the tubular body **306** such as torque rod **340** may similarly be provided with a zone of enhanced flexibility in the distal region of the tubular body **306**.

[**0165**] The implantable device **304** may also be retrieved and removed from the body in accordance with a further aspect of the present invention. One manner of retrieval and removal will be understood in connection with **FIGS. 20 through 20**C. Referring to **FIG. 20**, a previously implanted device **304** is illustrated as releasably coupled to the distal end of the tubular body **306**, as has been previously discussed. Coupling may be accomplished by aligning the tubular body **306** with the proximal end **324** of the deployed implant **304**, under fluoroscopic visualization, and distally advancing a rotatable core **342** through the threaded aperture **346**. Threadable engagement between the rotatable core **342** and aperture **346** may thereafter be achieved, and distal advancement of core **342** will axially elongate and radially reduce the implant **304**.

[**0166**] The tubular body **306** is axially movably positioned within an outer tubular delivery or retrieval catheter **360**. Catheter **360** extends from a proximal end (not illustrated) to a distal end **362**. The distal end **362** is preferably provided with a flared opening, such as by constructing a plurality of petals **364** for facilitating proximal retraction of the implant **304** as will become apparent. Petals **364** may be constructed in a variety of ways, such as by providing axially extending slits in the distal end **362** of the delivery catheter **360**. In this manner, preferably at least about three, and generally at least about four or five or six petals or more will be provided on the distal end **362** of the delivery catheter **360**. Petals **364** manufactured in this manner would reside in a first plane, transverse to the longitudinal axis of the delivery catheter **360**, if each of such petals **364** were inclined at 90 degrees to the longitudinal axis of the delivery catheter **360**.

[0167] In one application of the invention, a second layer of petals **365** are provided, which would lie in a second, adjacent plane if the petals **365** were inclined at 90 degrees to the longitudinal axis of the delivery catheter **360**. Preferably, the second plane of petals **365** is rotationally offset from the first plane of petals **364**, such that the second petals **365** cover the spaces **367** formed between each adjacent pair of petals **365**. The use of two or more layers of staggered petals **364** and **365** has been found to be useful in retrieving implants **304**, particularly when the implant **304** carries a plurality of tissue anchors **195**.

[0168] The petals **364** and **365** may be manufactured from any of a variety of polymer materials useful in constructing medical device components such as the delivery catheter **360**. This includes, for example, polyethylene, PET, PEEK, PEBAX, and others well known in the art. The second petals **365** may be constructed in any of a variety of ways. In one convenient construction, a section of tubing which concentrically fits over the delivery catheter **360** is provided with a plurality of axially extending slots in the same manner as discussed above. The tubing with a slotted distal end may be concentrically positioned on the catheter **360**, and rotated such that the space between adjacent petals **365** is offset from the space between adjacent petals **364**. The hub of the petals **365** may thereafter be bonded to the catheter **360**, such as by heat shrinking, adhesives, or other bonding techniques known in the art.

[0169] The removal sequence will be further understood by reference to **FIGS. 20***a* through **20***c*. Referring to **FIG. 20***a*, the radially reduced implant **304** is proximally retracted part way into the delivery catheter **360**. This can be accomplished by proximally retracting the tubular body **306** and/or distally advancing the catheter **360**. As illustrated in **FIG. 20***b*, the tubular body **306** having the implant **304** attached thereto is proximally retracted a sufficient distance to position the tissue anchors **195** within the petals **364**. The entire assembly of the tubular body **306**, within the delivery catheter **360** may then be proximally retracted within the transseptal sheath **366** (e.g., delivery sheath) or other tubular body as illustrated in **FIG. 20***c*. The collapsed petals **364** allow this to occur while preventing engagement of the tissue anchors **195** with the distal end of the transseptal sheath **366** or body tissue. The entire assembly having the implantable device **304** contained therein may thereafter be proximally withdrawn from or repositioned within the patient.

[0170] In **FIGS. 21-21E** there is provided another embodiment of an implant and delivery system. Adjustable implant deployment system **300** comprises catheter **302** and detachable implant **304** having a frame **506** and anchors or barbs **195**, as discussed in greater detail above with respect to **FIG. 17** and other figures. As illustrated in **FIG. 21**, the deployment system **300** also includes a slider assembly **400**. In the illustrated embodiment, slider assembly **400** includes a guide tube **320** extending proximally from the distal end or distal hub **314** of the implant, and a slider nut **402** slidably received in a channel **430** of the guide tube **320**. Slider nut **402** preferably includes a flange **404** operable to travel within a longitudinal slot **410** that extends at least partially along the length of guide tube **320**. The flange **404** of the slider nut **402** has a proximal surface **406** and a distal surface **408**. Slot **410** has a proximal surface **412**, and in one embodiment, extends through the distal end of the guide tube **320**. Slot **410** may have a generally rectangular shape.

[0171] In the embodiment shown in **FIG. 21**, proximal movement of the flange **404** within the slot **410**, as well as proximal movement of the slider nut **402** within the guide tube **320**, is limited by interference between the proximal surfaces **406**, **412**, of flange **404** and guide tube **320**, respectively, as slider nut **402** is moved in the proximal direction. As shown in **FIGS. 21A, 21C** and **21**D, distal movement of the flange **404** within the slot **410**, as well as distal movement of the slider nut **402** within the guide tube **320**, is limited by interference between the axially moveable core **312** and the cross pin **318**, as described in greater detail with reference to **FIG. 21A** below. In addition, flange **404** prevents slider nut **402** from rotating within guide tube **320** due to the interference between flange **404** and the side walls of the slot **410**.

[0172] In one embodiment, the slot **410** of the guide tube **320** is laser-cut, and has a length in the range between about 3 mm and 35 mm, and a width in the range between about 0.5 mm and 2 mm. In one embodiment, the length of the guide tube **320** slot **410** is in the range between about 0.4 in and about 0.826 in. In one embodiment, the width of the guide tube **320** slot **410** is in the range between about 0.02 in and about 0.04 in. In one embodiment, the slider nut **402** is a keyed polymer extrusion, and is sized so that it fits and slides at least partially within the guide tube **320**. Such material is advantageous in that it provides a reduced friction interface between the slider nut **402** and the guide tube **320**. In other embodiments, the slider nut **402** is made from plastic, metal, or ceramic. In another embodiment, the slider nut **402** is made from PEBAX, polyethylene, polyurethane, nickel titanium, or stainless steel. Flange **404** may be integrally formed with the slider nut **402**, or may be attached to it. In one embodiment, flange **404** is made from plastic, and is sized so that it fits and slides within the slot **410** of the guide tube **320**. The exact length of the flange **404** is selected based upon the dimensions of the slot **410**, and will vary based upon the clinical parameters of the particular treatment.

[0173] Several views of one embodiment of the adjustable implant deployment system **300** of **FIG. 21** are shown in **FIGS. 21A-21E**. **FIG. 21A** illustrates the distal end **344** of an axially moveable core **312** similar to that described above, releasably coupled to a slider assembly **400**. Slider assembly **400** includes guide tube **320** and slider nut **402**, as described above. Slider nut **402** includes a flange **404** as described above and a mating surface **420** for receiving the distal end **344** of axially moveable core **312**. In one embodiment, mating surface **420** of nut **402** is an internally threaded surface. Mating surface **420** of nut **402** engages mating surface **422** of axially moveable core **312** to provide axial coupling between the movement of the axially moveable core **312** and the slider nut **402**. In the illustrated embodiment, mating surface **422** of axially moveable core **312** is an externally threaded surface on a distal section of the axially moveable core which terminates proximal to the very distal tip of the axially moveable core **312**.

[0174] In one embodiment, the axially moveable core **312** includes a proximal shaft **576**, a flexible core section **564**, and a distal shaft **578** as described in greater detail below with reference to **FIG. 37**. The distal shaft **578** includes a

mating surface **584** (as shown on **FIG. 37**), which corresponds to the mating surface **422** of the axially moveable core **312** as shown on **FIG. 21A**. The mating surface **422** of axially moveable core **312** preferably is a threaded surface to facilitate releasable attachment to the mating surface **420** of the slider nut **402**. In one embodiment, the mating surface **422** provides self-tapping functionality to the axially moveable core **312**. The mating surface **422** of the axially moveable core **312** includes threads, and is self-tapping as it is inserted into the slider nut **402** of the slider assembly **400**. In one embodiment, the slider nut **402** contains a central lumen extending axially therethrough. In one embodiment, the mating surface **420** of the slider nut **402** does not contain threads, but is tapped (e.g., mating threads are created), as the axially moveable core **312** is inserted into, and rotated with respect to the slider nut **402**.

[**0175**] In one embodiment, the axially moveable core **312** preferably is attached to the slider nut **402** by rotating the axially moveable core **312** such that the threads of the mating surface **422** of axially moveable core **312** engage threads of the mating surface **420** of nut **402**. Similarly, in one embodiment, axially moveable core **312** is detached or decoupled from the slider nut **402** of the slider assembly **400** by rotating the axially moveable core **312** in the opposite direction. In one embodiment, as the axially moveable core **312** is rotated in the detachment direction, the threads of the mating surface **422** of axially moveable core **312** disengage the threads of the mating surface **420** of nut **402**, thereby releasing the axially moveable core **312** from the slider nut **402**, slider assembly **400**, and implant **304**. Additional description of the axially moveable core **312** and contemplated alternative embodiments are provided below, including the illustration and discussion related to **FIG. 37**.

[**0176**] In the embodiment of **FIGS. 21-21E**, there is illustrated the axially moveable core **312** releasably coupled to the slider nut **402** of the slider assembly **400** of an implant **304**. In the illustrated embodiment, the mating surface **422** of axially moveable core **312** is coupled with the mating surface **420** of nut **402** such that the distal end surface **429** of the axially moveable core **312** and a marker **431** reside distal the slider nut **402** of the slider assembly **400**. In one embodiment, the axially moveable core **312** is coupled to the slider nut **402** such that the marker **431** resides approximately 1 to 3 mm distal the distal surface **418** of slider nut **402**. In other embodiments, the axially moveable core **312** is coupled to the slider nut **402** of the slider assembly **400** such that the distal surface **429** of the axially moveable core **312** and/or the marker **431** reside within slider nut **402**. Examples of such embodiments are provided in greater detail below with reference to **FIGS. 22A, 23**, and **26**.

[**0177**] In one embodiment, axially moveable core **312** also includes a lumen **426**. The lumen **426** preferably allows visualization dye to flow through the lumen **426** of the axially moveable core **312**, through the lumen **428** of the implant plug **316**, and into the left atrial appendage. Such usage of visualization dye is useful for clinical diagnosis and testing of the position of the implant **304** within the left atrial appendage or other body opening, as described in greater detail below.

[**0178**] The marker **431** as shown in **FIGS. 21A, 21C** and **21**D advantageously assists in locating the position of the distal end **344** of the axially moveable core **312**. In one embodiment, marker **431** comprises a radiopaque band press fit onto the distal end **344** of the axially moveable core **312**. Marker **431** preferably is made from a material readily identified after insertion into a patient's body by using visualization techniques that are well known to those of skill in the art. In one embodiment, the marker **431** is made from gold, or tungsten, or any such suitable material, as is well known to those of skill in the art. In another embodiment, marker **431** is welded, soldered, or glued onto the distal end **344** of the axially moveable core **312**. In one embodiment, marker **431** is an annular band and surrounds the circumference of the axially moveable core **312**. In other embodiments, the marker **431** does surround the circumference of the axially moveable core **312**. In other embodiments, marker **431** includes evenly or unevenly spaced marker segments. In one embodiment, the use of marker segments is useful to discern the radial orientation of the implant **304** within the body.

[**0179**] In the embodiment of **FIG. 21A**, with axially moveable core **312** threadingly engaged with slider nut **402**, as axially moveable core **312** is moved distally, distal surface **429** of axially moveable core **312** presses against cross pin **318** to place or maintain implant **304** in a reduced diameter configuration (such as in combination with pulling proximally on pull wire **328**, as discussed above). As tension on pull wire **328** is reduced, implant **304** assumes its expanded diameter configuration by bending under its own bias. Alternatively, in another embodiment, axially moveable core **312** is moved proximally, thereby relieving pressure on cross pin **318**, and allowing implant **304** to assume its expanded diameter configuration. Expansion and reduction of implant **304** diameter is described in greater detail above with reference to **FIG. 17**, and further below.

[**0180**] Once implant **304** of **FIG. 21A** assumes the expanded configuration, the axially moveable core **312** and the slider nut **402** may be moved proximally until the proximal surface **406** of flange **404** interferes with the proximal surface **412** of slot **410**, without substantially affecting the shape or position of the implant **304**. Similarly, once the implant **304** assumes the expanded configuration, the axially moveable core **312** and slider nut **402** may be moved distally back until the distal surface **429** of the axially moveable core **312** interferes with the cross pin **318**, or implant plug **316**, without substantially affecting the shape or position of the implant **304**.

[**0181**] Such controllable axial decoupling between the movement of the axially moveable core **312** and the implant **304** is useful during delivery and expansion of the implant **304**. In addition, controllable axial decoupling is useful for testing the seal between the implant **304** and the left atrial appendage once the implant **304** has been delivered, but before releasing the implant **304** from the catheter **302**.

[**0182**] For example, it is clinically advantageous to provide axial decoupling between the axially moveable core **312** and the implant **304**. Axial decoupling assures that movement of the axially moveable core **312**, as well as other components of the adjustable implant deployment system **300** that are coupled to the axially moveable core **312** (for example, but not limited to the deployment handle **538** and the catheter **302**, described further below), do not substantially affect the shape or position of the implant **304**. Such axial decoupling prevents inadvertent movement of the

axially moveable core **312** or deployment handle **538** from affecting the shape or position of implant **304**. For example, in one embodiment, if the user inadvertently pulls or pushes the axially moveable core **312** or the deployment handle, the position of the implant **304** within the left atrial appendage preferably will not be substantially affected. In addition, axial decoupling also preferably prevents the motion of a beating heart from translating into movement of the axially moveable core **312**, the catheter **302**, and the components coupled to the axially moveable core **312** and catheter **302**, including the deployment handle. By decoupling the implant **304** from the axially moveable core **312** and other components coupled to the axially moveable core **312**, the risk of accidentally dislodging the implant **304** from the left atrial appendage during testing is reduced.

[**0183**] There is illustrated in **FIG. 22** another adjustable implant deployment system **300** built in accordance with another embodiment of the present invention. The embodiment illustrated in **FIG. 22** is similar to that illustrated in **FIG. 21**. Adjustable implant deployment system **300** comprises catheter **302** and detachable implant **304** as discussed in greater detail above with respect to **FIG. 17**. The system **300** also includes a slider assembly **400** having a guide tube **320** and slider nut **402** slidably received therein. Slider nut **402** preferably includes a flange **404** operable to travel within the longitudinal slot **410** of the guide tube **320**. The flange **404** of the slider nut **402** has a proximal surface **406** and a distal surface **408**. Slot **410** has a proximal surface **412** and distal surface **414**, and does not extend through the distal end of the guide tube **320**. Slot **410** in one embodiment has a generally rectangular shape.

[**0184**] The slider assembly **400** of **FIG. 22** functions in a similar manner to that illustrated and described with reference to **FIGS. 21-21E**. However, as shown in **FIG. 22A**, once the implant **304** assumes the expanded configuration, the axially moveable core **312** and slider nut **402** may be moved distally until the distal surface **408** of flange **404** interferes with the distal surface **414** of slot **410** and/or the distal surface of slider nut **402** interferes with cross pin **318**, without substantially affecting the shape or position of the implant **304**.

[**0185**] In one embodiment, the axially moveable core **312** of **FIG. 22A** is similar to that of **FIG. 21A**, except for the location of mating surface **422**. In the embodiment illustrated in **FIG. 22A**, the mating surface **422** of axially moveable core **312** extends to the distal surface **429** of axially moveable core **312**. In such configuration, the mating surface **422** of axially moveable core **312** preferably is contained within the slider nut **402** of the slider assembly **400**, as illustrated in **FIG. 22A**. The marker **431** (not shown in **FIG. 22A**) of the axially moveable core **312** preferably is attached to the axially moveable core **312** such that it does not interfere with the coupling of the mating surface **420** of nut **402** and mating surface **422** of axially moveable core **312**. For example, in one embodiment, marker **431** is pressed, welded, soldered, glued or plated onto the lumen **426** of the axially moveable core **312**, the distal surface **429** of axially moveable core **312**, or circumferentially around or partially circumferentially around the axially moveable core **312** such that interference between mating surfaces **420**, **422** does not occur. In addition, in the embodiment of **FIG. 22A**, the distal end **344** of axially moveable core **312** preferably is positioned within the slider nut **402** of the slider assembly **400**, and does not extend past the distal surface **418** of slider nut **402**.

[**0186**] In the embodiment illustrated in **FIG. 22A**, slider nut **402** includes a lumen **424** extending distally of core **312** that allows visualization dye to flow from the lumen **426** of axially moveable core **312** through to the lumen **428** of the implant plug **316** and into the left atrial appendage. Such usage of visualization dye is described in greater detail below.

[**0187**] An illustration of an alternative implementation of a slider assembly is provided in **FIG. 23**. **FIG. 23** illustrates the distal end **344** of axially moveable core **312** coupled to a slider assembly **400** similar to that described above. In **FIG. 23**, slider assembly **400** includes a guide tube **320** and a slider nut **402**. Guide tube **320** includes a channel **430** in which slider nut **402** travels as axially moveable core **312** is moved proximally or distally. Proximal movement of the slider nut **402** is limited by interference between proximal surface **416** of slider nut **402** and proximal ridge **432** of guide tube **320**. Distal movement of the slider nut **402** is limited by interference between distal surface **418** of slider nut **402** and the distal ridge **434** of guide tube **320**. Alternatively, distal movement of the slider nut **402** can be limited by interference between the distal surface **418** of slider nut **402** and the cross pin **318**, or the implant plug **316**, as shown in greater detail with reference to **FIG. 22**.

[**0188**] To prevent rotation of slider nut **402** within the guide tube **320**, the cross-sectional shape of the channel **430** and slider nut **402** may have a non-circular shape. Examples of non-circular cross-sectional shapes of slider nut **402** are illustrated with reference to **FIG. 24** and **FIG. 25**. **FIG. 24** illustrates one implementation in which the slider nut **402** and channel **430** have an elliptical cross-sectional shape. **FIG. 25** illustrates another implementation in which the slider nut **402** and the channel **430** have a rounded-rectangular cross-sectional shape. It is well understood by those skilled in the art that the slider nut **402** and channel **430** may have any non-circular shape so as to prevent rotation of slider nut **402** within the guide tube **320**.

[**0189**] Another implementation of one embodiment of the present invention is provided with reference to **FIG. 26**. **FIG. 26** illustrates the distal end **344** of axially moveable core **312** removably coupled to a slider assembly **400**. As shown in **FIG. 26**, proximal movement of slider nut **402** is limited by interference between proximal surface **416** of slider nut **402** and proximal ridge **432** of guide tube **320**. Distal movement of slider nut **402** is limited by interference between distal surface **429** of axially moveable core **312** and cross pin **318**. The distal end **344** of the axially moveable core **312** is shown having a first diameter **433**, a second diameter **435**, and a step **437** therebetween. In other embodiments, the distal end **344** of the axially moveable core **312** does not include such first diameter **433**, second diameter **435**, and step **437**. In one embodiment, the axially moveable core **312** is screwed into the slider nut **402** of the slider assembly **400** until the proximal surface **416** of slider nut **402** interferes with the step **437** of the axially moveable core **312**. In another embodiment, the axially moveable core **312** is advanced distally into the slider nut **402** of the slider assembly **400** as far as the mating surface **420** of nut **402** and mating surface **422** of axially moveable core **312** permit.

Axial rotation of slider nut **402** with respect to the guide tube **320** may be limited by providing slider nut **402** with a non-circular cross-sectional shape, as described in greater detail above. An example of slider nut **402** having a non-circular cross-sectional shape is illustrated in **FIG. 27**. **FIG. 27** shows the sectional view along cut line **27-27** of **FIG. 26**.

[**0190**] In another embodiment described with reference to **FIG. 26A**, a slider assembly **400** does not include a slider nut **402**. Instead, the distal end **600** of an axially moveable core **312** includes an externally threaded, enlarged diameter, distal portion **602**, and the proximal end **604** of a guide tube **320** includes an internally threaded, reduced diameter, proximal portion **606**. The axially moveable core **312** is coupled to the guide tube **320** of the implant **304** by screwing the externally threaded, enlarged diameter, distal portion **602** of the axially moveable core **312** into the internally threaded, reduced diameter, proximal portion **606** of the guide tube **320**. Once coupled, the implant **304** is delivered to the desired deployment site within the patient as described in further detail herein. The axially moveable core **312** is then further manipulated (e.g., rotated in a clockwise direction), until the externally threaded, enlarged diameter, distal portion **602** of the axially moveable core **312** enters the guide tube **320** of the implant **304**, and becomes decoupled from the internally threaded, reduced diameter, proximal portion **606** of the guide tube **320**, as shown in **FIG. 26A**.

[**0191**] Thereafter, proximal movement of the axially moveable core **312** with respect to the implant **304** is limited by interference between a proximal surface **608** of the external threads of the enlarged diameter, distal portion **602** of the axially moveable core **312**, and a distal surface **610** of the internal threads of the reduced diameter, proximal portion **606** of the guide tube **320**. Distal movement of the axially moveable core **312** with respect to the implant **304** is limited by interference between a distal surface **612** of the external threads of the enlarged diameter, distal portion **602** of the axially moveable core **312**, and a cross pin **318**, as described in greater detail herein. Alternatively, distal movement of the axially moveable core **312** with respect to the implant **304** can be limited by interference between the distal surface **429** of axially moveable core **312** and the cross pin **318**, as described in greater detail herein.

[**0192**] To remove the axially moveable core **312**, the axially moveable core **312** is moved proximally with respect to the implant **304** and manipulated (e.g., rotated counter-clockwise), until the external threads of the enlarged diameter, distal portion **602** of the axially moveable core **312** engage the internal threads of the reduced diameter, proximal portion **606** of the guide tube **320**. The axially moveable core **312** is then further manipulated (e.g., rotated counter-clockwise), until the external threads of the enlarged diameter, distal portion **602** of the axially moveable core **312** disengage the internal threads of the reduced diameter, proximal portion **606** of the guide tube **320** such that the axially moveable core **312** may thereafter be removed from the patient while leaving the implant **304** in place.

[**0193**] In the embodiment of **FIG. 26A** described above, transverse movement of at least a portion of the axially moveable core **312** with respect to the guide tube **320** and the implant **304** is decoupled over a limited range. As illustrated, transverse movement is permitted by the outside diameter of the axially moveable core **312** being substantially smaller than the inside diameter of the proximal portion of the guide tube **320**. This permits the core **312** to move transversely within the space defined by the proximal portion of the guide tube. In other embodiments, transverse movement is permitted by controlling the relative dimensions of the inside diameter of the guide tube **320**, the inside diameter of the proximal portion of the guide tube **320**, the outside diameter of the axially moveable core **312**, the outside diameter of the slider nut **402**, or a combination of any of the above, to provide space between corresponding parts of the device. It will be appreciated by those of skill in the art that transverse movement may be provided with any of the embodiments described herein, including those that incorporate a slider nut **402** as part of the slider assembly **400**. In one embodiment, as at least a portion of the axially moveable core **312** is moved in a direction transverse to the guide tube **320**, the axially moveable core **312** can also be positioned at an angle with respect to the longitudinal axis of the guide tube **320** and implant **304**.

[**0194**] **FIG. 28** illustrates another implementation of a slider assembly **400**. The slider assembly **400** provides quick-disconnect functionality, and the ability to release the axially moveable core **312** from the guide tube **320** without using rotational forces. Such configuration is advantageous in that rotational forces applied to the axially moveable core **312** to unscrew it from the guide tube **320** can, in some clinical situations, cause the implant **304** to rotate within or dislodge from the left atrial appendage. By using quick-disconnect functionality, such as that illustrated in the embodiment of **FIG. 28**, the operator may decouple the axially moveable core **312** from the guide tube **320** of the slider assembly **400** by applying axial force instead of rotational force. An axial force may be particularly advantageous because in certain embodiments, the anchors **195** of the implant may provide greater resistance to axial movement than to rotational movement, and thus be better able to withstand axial decoupling of the axially moveable core **312** from the slider assembly **400** than rotation decoupling.

[**0195**] In the illustrated embodiment of **FIG. 28**, slider assembly **400** includes a guide tube **320**, shown coupled to an axially moveable core **312**. Guide tube **320** includes a slot **410**, as described in greater detail above with reference to **FIG. 21**. Axially moveable core **312** is preferably hollow and includes a bending plug **436** near its distal end, a port **440** provided in the core **312** adjacent plug **436**, with a retractable lock **438** extending through the lumen of the core **312**. After axially moveable core **312** is inserted into the guide tube **320**, retractable lock **438** is advanced distally relative to the core **312** until it is guided by bending plug **436** through the port **440** of axially moveable core **312**. When properly positioned, a distal tip **442** of retractable lock **438** extends into the slot **410** of the guide tube **320**. The distal tip **442** of retractable lock **438** limits axial movement of the axially moveable core **312** relative to the guide tube **320** by interference between the distal tip **442** of retractable lock **438** and the proximal and distal surfaces **412**, **414** of slot **410**. Retractable lock **438** is made from a material or materials flexible enough to bend as provided by bending plug **436**, yet stiff enough to limit the motion of the axially moveable core **312** by interfering with proximal and distal surfaces **412**, **414** of slot **410**. In one embodiment, retractable lock **438** includes a spiral cut, transverse slots, or changes in material or thickness to control flexibility. In one

embodiment, the distal tip **442** of retractable lock **438** comprises a material that is stiffer, or less flexible than the retractable lock **438**.

[**0196**] In one embodiment, the retractable lock **438** is made from a flexible wire, such as a nickel titanium or stainless steel. Alternatively, retractable lock **438** is made from metal hypotube, plastic, or other biocompatible material. In one embodiment, bending plug **436** is made from metal, such as nickel titanium or stainless steel. Alternatively, bending plug **436** is made from plastic, or other biocompatible material.

[**0197**] An alternative embodiment of a slider assembly **400** is shown in **FIG. 29**. The slider assembly **400** of **FIG. 29** also provides quick-disconnect functionality for release of axially moveable core **312** from guide tube **320** by using non-rotational forces. As illustrated, slider assembly **400** includes a guide tube **320**, which comprises at least one slot **410**. Two opposing slots **410** are shown in the embodiment of **FIG. 29**. Axially moveable core **312** is coupled to guide tube **320** by quick-disconnect functionality.

[**0198**] Axially moveable core **312** in this embodiment includes a retractable lock **438** in the form of an elongate key **439** extending through the lumen of the core **312**, and two opposing ports **440** in axially moveable core **312** through which two tabs **444** extend. The distal tip **442** of the key **439** includes a contact surface **446** operable to engage contact surfaces **448** of the tabs **444**. The key **439** is moveable relative to the axially moveable core **312**, and can be moved distally such that contact surface **446** engages contact surfaces **448** of tabs **444**, translating into radial movement of tabs **444**. Radial movement of tabs **444** causes them to project into slots **410** of the guide tube **320** by bending radially outwardly, and extending in a substantially radial direction. In one embodiment, the key **439** is secured in place relative to the axially moveable core **312**, so that the tabs **444** remain projected into the slots **410** of the guide tube **320**. With the tabs **444** secured in place, axial movement of axially moveable core **312** preferably is limited by interference between the tabs **444** and the proximal and distal surfaces **412**, **414** of guide tube **320**.

[**0199**] In one embodiment, the key **439** is made from an elongate wire, rod, or tube flexible enough for delivery through the adjustable implant deployment system **300** described above, and strong enough to apply enough force to tabs **444** to achieve the functionality described above. In one embodiment, the key **439** is made from stainless steel. The key **439** preferably is locked in place relative to the axially moveable core **312** by using a control, such as a thumbswitch or other such device as is well known to those of skill in the art. For example, in one embodiment, the axially moveable core **312** is secured to the proximal portion of a deployment handle (not shown) such that the position of the axially moveable core **312** is fixed with respect to the deployment handle. A key **439** preferably is inserted inside of the axially moveable core **312** such that it may slide axially within the axially moveable core **312**. The proximal portion of the key **439** preferably is coupled to a control, such as, for example, a thumbswitch. The thumbswitch preferably is provided such that it may slide axially with respect to the deployment handle (and therefore with respect to the axially moveable core **312**) over a predetermined range. By coupling the thumbswitch to the proximal portion of the key **439**, axial movement of the key **439** with respect to the axially moveable core **312** is achieved over the predetermined range. In addition, by locking the thumbswitch in place (by using mechanisms well known to those of skill in the art, such as release buttons, tabs, or their equivalents), the key **439** may be locked in place with respect to the axially moveable core **312**. Alternatively, switches, levers, buttons, dials, and similar devices well known to those of skill in the art may be used instead of a thumbswitch as the control for the retractable lock **438**.

[**0200**] To decouple axially moveable core **312** from the guide tube **320**, retractable lock **438** is released by moving key **439** proximally relative to axially moveable core **312**, thereby removing radial forces from contact surfaces **448** of tabs **444**. In one embodiment, tabs **444** are biased to bend inward upon the removal of the radial forces from their contact surfaces **448**. For example, tabs **444** preferably are constructed from a spring material, or a shape memory metal, such as, for example, nickel titanium. Alternatively, in another embodiment, key **439** is moved distally to decouple axially moveable core **312** from the guide tube **320**. For example, in one embodiment, key **439** includes a cutout, notch, or slot along at least a portion of its distal end. In one embodiment, as the key **439** is moved distally, the cutout, notch, or slot is moved such that it engages the tabs **444**, allowing them to flex inwardly preferably under their own bias. In another embodiment, tabs **444** are biased to bend outward upon removal of a radial force from a contact surface **448**, and bend inward upon application of a radial force to contact surface **448**. In such embodiment, the key **439** preferably is advanced distally to apply force on a contact surface **448** such that tabs **444** are directed inward. In one embodiment, the key **439** is advanced proximally to apply force on a contact surface **448** such that tabs **444** are directed inward.

[**0201**] Alternative mechanisms for coupling the axially moveable core **312** to the slider assembly **400** may be used in addition to or instead of those described above. In one embodiment, the mating surface **420** of nut **402** and mating surface **422** of axially moveable core **312** may include at least one slot and at least one pin, respectively, such that axially moveable core **312** couples with the slider nut **402** by a bayonet mount. In one such embodiment, axially moveable core **312** is proximally advanced until the at least one slot of its mating surface **422** receives the at least one pin of the mating surface **420** of the nut **402**. Axially moveable core **312** is subsequently rotated to lock the axially moveable core **312** with respect to the slider nut **402**. Axially moveable core **312** may be decoupled from slider nut **402** by rotating it in the opposite direction.

[**0202**] Referring to FIGS. **29**A-G, in one embodiment, the axially moveable core **312** is coupled to the guide tube **320** of the slider assembly **400** with a bayonet mount **450**. In one embodiment, the bayonet mount **450** includes a guide tube **320**, which includes an un-threaded channel **430**, and a maze-type slot **452**. In one embodiment, the maze-type slot **452** includes at least one entry portion **454** extending in an axial direction, and at least one keyed portion **456** extending at least partially in a non-axial direction. In one embodiment, the maze-type slot **452** extends from the proximal edge **458** of the guide tube **320** in the distal direction, then extends in a direction substantially transverse the axis of the guide tube **320**, and then extends axially, either in the

proximal or distal direction, or both, such as shown for example, in **FIGS. 29E and 29F**. The mating surface **422** of the axially moveable core **312** includes a flange **460**, pin, or equivalent structure, which engages the maze-type slot **452** of the guide tube **320**. An example of one such flange **460** is illustrated in **FIG. 29B**. By manipulating the flange **460** of the axially moveable core **312** with respect to the maze-type slot **452** of the guide tube **320** according to a predetermined sequence, the axially moveable core **312** may be coupled to the detachable implant **304**. In addition, the shape of the maze-type slot **452** may provide limited axial decoupling between the axially moveable core **312** and the detachable implant **304** along the keyed portion **456** of the maze-type slot **452**, such as described above with respect to the slider assembly **400** of **FIGS. 21-21E**.

[**0203**] In another embodiment, the maze-type slot **452** of the bayonet mount **450** is provided on the axially moveable core **312**, and the flange **460** of the bayonet mount **450** is provided on the guide tube **320** of the slider assembly **400**. The flange **460** may extend in a radial outward direction, such as shown in **FIG. 29C**, or may extend in a radial inward direction, such as shown in **FIG. 29G**. In another embodiment, the flange **460** extends in both radial outward and radial inward directions.

[**0204**] In other embodiments, a slider assembly need not be connected to the implant, and for example, can be provided as part of the axially moveable core, or even the deployment handle in order to decouple axial movement between the implant and delivery system. For example, in one embodiment, an axially moveable core may include two concentric or axially aligned tubes, slidably moveable with respect to one another, such as, for example, an outer tube and an inner tube. The outer tube may include a mating surface on or near its distal end to engage a mating surface on the distal hub, or elsewhere on the implant. The outer tube slidably engages an inner tube, which enters the outer tube at the outer tube's proximal end. In one embodiment, a solid core is used instead of an inner tube. Relative proximal and distal movement of the inner and outer tube is preferably limited by a motion limit. In one embodiment, the motion limit includes at least one cross pin. In other embodiments, the motion limit includes at least one flare, annular ring, bump, or other suitable mechanism as is well known to those of skill in the art. The inner tube extends preferably to a handle as described above for operating the axially moveable core. The engagement of the outer tube and the inner tube of the axially moveable core may occur anywhere between the handle and the implant along the length of the core.

[**0205**] In another embodiment, the inner tube includes a mating surface on its distal end to engage a mating surface on the distal hub of the implant. The inner tube slidably engages an outer tube, which at least partially covers the inner tube at the inner tube's proximal end. Relative proximal and distal movement of the inner and outer tube is preferably limited by a motion limit as described above, with the outer tube extending outside of the patient and operably connected to a handle.

[**0206**] In another embodiment as shown in FIGS. **29**H-I, a first portion **462** of the axially moveable core **312**, and a second portion **464** of the axially moveable core **312** are coupled to one another with a key mount **462**. The second portion **464** includes a flange **468**, pin, or equivalent structure, which engages a maze-type slot **470** of the first portion **462** of the axially moveable core **312**. By pulling, rotating, and pushing the first portion **462** with respect to the second portion **464** according to a predetermined sequence, limited axial decoupling between the first portion **462** and second portion **464** is achieved.

[**0207**] In one embodiment, the first portion **462** comprises a proximal portion of the axially moveable core **312**, and the second portion **464** comprises a distal portion of the axially moveable core **312**. In another embodiment, the first portion **462** comprises a distal portion of the axially moveable core **312**, and the second portion **464** comprises a proximal portion of the axially moveable core **312**. In one embodiment, the flange **468** extends in an outward radial direction, such as shown in **FIG. 29I**. In another embodiment, the flange **468** extends in an inward radial direction, or in both, radially outward and inward directions.

[**0208**] Alternatively, in another embodiment, a slider assembly can be provided as part of a deployment handle. In one embodiment, the distal portion of an axially moveable core includes a mating surface to engage a mating surface of the distal hub of the implant. The deployment handle can include a guide tube and an internally slideable nut, or other slider assembly such as described above, for receiving the proximal end of the axially moveable core.

[**0209**] **FIG. 30** illustrates a deployment system **300**, having an implant **304** and a delivery system **500**, in accordance with one embodiment of the present invention. In a preferred embodiment, the implant **304** is a transluminally delivered device designed to occlude or contain particles within the left atrial appendage **502** (LAA **502**) and prevent thrombus from forming in, and emboli from originating from, the LAA **502**. The deployment system as described herein incorporates a slider assembly **400** such as described with respect to **FIGS. 21-21E** above.

[**0210**] The delivery system **500** preferably may be used to deliver the implant **304** to occlude or block the LAA **502** in a patient with atrial fibrillation. The delivery system **500** preferably is compatible for use with a delivery sheath **504** (e.g., a transseptal sheath), shown in **FIGS. 38A-38C**. The delivery system **500** and implant **304** preferably are designed to allow the implant **304** to be positioned, repositioned, and retrieved from the LAA **502** if necessary. Injection ports **546**, **548**, as shown in **FIGS. 32 and 33**, preferably are provided in the delivery system **500** to allow contrast injection proximally and distally of the implant **304** to facilitate in-vivo assessment of the positioning and seal quality of the implant **304**.

[**0211**] As shown in **FIG. 31**, the implant **304** preferably is available in a range of sizes to accommodate the anatomy of a patient's LAA **502**. The implant **304** preferably comprises a frame **506** and a membrane (not shown) on a proximal face of the implant, such as described above. The frame **506** preferably is constructed of self-expanding nitinol supports. The membrane preferably is constructed of a fabric covering, such as one made of ePTFE, or an ePTFE/PE laminate. To attach the membrane to the frame **506**, a PE mesh preferably is placed against the supports, with one sheet of ePTFE preferably placed over the PE mesh and another sheet of ePTFE preferably placed on an opposite side of the supports. The membrane preferably is heated on both sides

causing the PE to melt into both sheets of ePTFE, thereby surrounding a portion of the frame **506**. The nitinol supports allow the implant **304** to self-expand in the appendage **502**, covering the orifice with the laminated fabric. The porous ePTFE/PE lamination facilitates rapid endothelialization and healing.

[**0212**] As shown in **FIGS. 30 and 31**, the implant **304** preferably extends from a proximal end or hub **324** to a distal end or hub **314**. In some embodiments, the proximal hub **324** is coupled with a crosspin **329** as described above. In some embodiments the distal hub **314** is coupled with a slider assembly **400** as described above. The distal hub **314** preferably is coupled with an implant plug **316**. In one embodiment, the implant plug **316** comprises an atraumatic tip, such that contact between the atraumatic tip and the inside surface of the LAA **502** does not cause significant damage to the LAA **502**. The implant **304** preferably is expandable and collapsible. The implant **304** preferably comprises anchors **195** that extend from the frame **506** when the implant **304** is expanded as described above.

[**0213**] As shown in **FIGS. 32 and 33**, the delivery system **500** preferably comprises a peel-away sheath **512**, a recapture sheath **514**, a deployment catheter **516**, and an axially moveable core **312**, each described further below. In addition, **FIG. 32** illustrates the deployment system without a loading collar **510**, and **FIG. 33** illustrates the deployment system with a loading collar **510**, with the system operably connected to an implant **304**.

[**0214**] The deployment catheter **516**, which is analogous to deployment catheter **302** described above, preferably comprises a deployment handle **538** and a multi-lumen shaft **540**. As shown in **FIGS. 32 and 33**, the deployment handle **538** preferably comprises a control knob **542**, a release knob **544**, a proximal injection port **546** and a distal injection port **548**. The multi-lumen shaft **540** preferably comprises a four-lumen shaft shown in **FIG. 32A**. The multi-lumen shaft **540** preferably comprises a core lumen **550** for holding an axially moveable core **312**, a control line lumen **552** and two proximal injection lumens **554** in communication with proximal injection port **546**.

[**0215**] An axially moveable core **312** preferably extends from the deployment handle **538** through the core lumen **550** of the catheter **516** and couples the implant **304** to the delivery system **500** through a slider assembly **400** as described above. Referring to FIGS. **30**, **33** and **36**, a control line **328** (referred to previously as a pull wire **328**) preferably extends through the control line lumen **552** and preferably couples a proximal hub **324** of the implant **304** to the deployment handle control knob **542**, allowing for implant **304** expansion and collapse. The control line **328** preferably extends around a portion of the axially movable core **312** near the proximal hub **324** of the implant **304**, and is coupled to the implant **304** by crosspin **329**, as described above.

[**0216**] As shown in **FIG. 36** (which is similar to **FIG. 21**), the deployment catheter **516** preferably comprises a flexible catheter section **562** at its distal end, which in some embodiments is a spiral cut tubular section housed in a polymer sleeve **566**. The flexible catheter section **562** may be coupled to a distal end of multilumen shaft **540**.

[**0217**] As shown in **FIGS. 36 and 37**, the axially moveable core **312** preferably includes a hollow proximal shaft **576** and a hollow distal shaft **578** with a flexible hollow core section **564** therebetween, all co-axially aligned and connected. In one embodiment, the proximal end of the distal shaft **578** is attached to the distal end of the flexible core section **564**, and the proximal end of the flexible core section **564** is attached to the distal end of the proximal shaft **576**. In some embodiments, the flexible core section **564** has a spring coil section **568** housed in a polymer sleeve **570**, the spring coil section **568** preferably coupled with the shafts **576** and **578** on first and second ends **572**, **574**.

[**0218**] The axially moveable core **312** preferably is disposed within the deployment catheter **516** such that the flexible core section **564** may be linearly co-located with the flexible catheter section **562** at a distal portion **560** of the delivery system **500** during appropriate times during a procedure, as shown in **FIG. 36**. When the flexible core section **564** is aligned and linearly co-located with the flexible catheter section **562**, the sections preferably cooperate to form a delivery system flexible segment **558**. As shown in **FIGS. 32, 33**, and **36**, the delivery system flexible segment **558** preferably is located toward a distal end **560** of the delivery system **500**.

[**0219**] In one embodiment, shown in **FIG. 37**, the distal shaft **578**, flexible core section **564**, and proximal shaft **576** are attached by welding. Small windows **580** may be provided to allow welding materials to flow between the shafts **564**, **576** and **578** and provide stronger bonding therebetween. In another embodiment, solder, glue, or press-fitting is used to attach shafts **564**, **576**, and **578** to one another, as is well known to those of skill in the art. In another embodiment, the shafts **564**, **576** and **578** are formed from a single tube, for example, a laser-cut tube. In other embodiments, more than one tube may be used to form each of the shafts **564**, **576** and **578**. For example, **FIG. 37** illustrates proximal shaft **576** comprising two tubes connected by welding such as described above.

[**0220**] Referring to **FIG. 37A**, distal contrast media preferably can be injected through a lumen **582** in the shafts **576** and **578** for determining the placement of the implant **304**. This lumen may be in fluid communication with distal injection port **548**, shown in **FIGS. 32 and 33**. The distal shaft **578** preferably comprises a mating surface **584** and a radiopaque marker **586**, such as described above. In one embodiment, the mating surface **584** is a threaded surface. The distal shaft **578** preferably is releasably coupled through the implant **304** with the slider assembly **400**, such as described above.

[**0221**] When the delivery system **500** is assembled, the recapture sheath **514** is preferably loaded over the deployment catheter **516**, distal to the handle **538**, as shown in **FIGS. 32 and 33**. The recapture sheath **514** preferably is designed to allow recapture of the implant **304** prior to its final release such as described with respect to retrieval catheter **360** above. Recapture petals or flares **528** preferably are provided on the distal end **530** of the recapture sheath **514** to cover the anchors **195** of the implant **304** during retrieval into the delivery sheath **504**, as described above with respect to **FIGS. 20A-20C**, and further below. A Touhy-Borst adapter or valve **532** preferably is attached to the proximal end **534** of the recapture sheath **514**. The recapture sheath **514** preferably comprises a radiopaque marker **536** on its distal end **530** near the recapture flares

528. The recapture sheath **514** preferably comprises a recapture sheath injection port **588** for delivering fluid proximal the implant **304**.

[**0222**] The peel-away sheath **512** preferably is provided over a portion of the recapture sheath **514**, between Touhy-Borst valve **532** and recapture flares **528**. The peel-away sheath **512** preferably is used to introduce the delivery system **500** into a delivery sheath **504** shown in **FIGS. 38A-38C**, described below. As shown in **FIGS. 32 and 33**, the peel-away sheath **512** preferably comprises a locking collar **522**, a peel-away section **524**, and a reinforced section **526**. The locking collar can be unlocked relative to peel-away section **524**, and preferably includes a threaded hub **523** that releasably engages tabs **525** of the peel-away section **524**.

[**0223**] The loading collar **510** preferably is located over a portion of the peel-away sheath **512** and a portion of the recapture sheath **514** with its proximal end being located over the peel-away sheath **512** at its distal end loaded over recapture sheath **514**. The loading collar **510** preferably accommodates loading a collapsed implant **304** into the peel-away sheath **512** as described below. As shown in **FIGS. 33 and 34**, the loading collar **510** preferably comprises a first end portion **518** adapted to receive and extend over a collapsed implant **304**, and a second end portion **520** configured to guide the collapsed implant **304** into the peel-away sheath **512**. The loading collar **510** preferably is made of stainless steel.

[**0224**] To assemble the delivery system, the axially movable core **312** and control line **328** preferably are fed into the multi-lumen shaft **540** of the deployment catheter **516**. The multi-lumen shaft **540** preferably is then coupled with components of the deployment handle **538** and the injection port components **546**, **548**. The peel-away sheath **512** and the loading collar **510** preferably are slid onto the recapture sheath **514**, and the recapture sheath **514** is slid onto the deployment catheter **516**. The implant **304** preferably is then loaded on an end of the axially movable core **312** and coupled with the control line **328**. In one embodiment, the implant **304** is loaded on an end of the axially movable core **312** by screwing the axially movable core **312** into the slider nut **402** of the slider assembly **400**. The control knob **542** and outer casing of the deployment handle **538** preferably are then coupled with the system.

[**0225**] The deployment system **300** preferably is used in connection with a delivery sheath **504** to advance the implant **304** for deployment in a patient. As shown in **FIGS. 30 and 38**A-**38**C, the delivery sheath **504** is a tubular device that in one embodiment can be advanced over a guidewire (not shown) for accessing the LAA **502** of a patient. Delivery sheath **504** in one embodiment has a permanent bend **594**, as shown in the views of **FIGS. 38A and 38B**. A hemostasis valve **596** is provided at the proximal end of transseptal sheath. A fluid injection port **598** is also provided at the proximal end to deliver fluid such as contrast media through the transseptal sheath. Systems and methods for implanting the device **304** in the LAA **502** are described further below.

[**0226**] In one embodiment, the system and method preferably allows for access and assessment of the LAA **502**. A guidewire (not shown) preferably is used to access the superior or inferior vena cava through groin access. For example, a delivery sheath **504** preferably is advanced over the guidewire and into the superior vena cava. The guidewire preferably is removed and replaced with a transseptal needle (not shown). The delivery sheath **504** preferably is retracted inferiorly so that the bend **594** in delivery sheath directs the distal tip of the delivery sheath **504** toward the fossa ovalis. The needle preferably is advanced to puncture the fossa ovalis. The delivery sheath **504** preferably is advanced to establish access to the LAA **502** and the needle preferably is retracted. Further details or disclosure are provided in copending U.S. patent applications Ser. Nos. 09/435,562 and 10/033,371, the entireties of which are hereby incorporated by reference. In one embodiment, the implant **304** can be deployed within the LAA **502** as an adjunct to surgical heart procedures, as described below. The delivery sheath **504** for establishing access to the LAA **502** can be generally straight and can have a length less than the length of the delivery sheath **504** which is advanced through the superior or inferior vena cava.

[**0227**] After properly preparing a delivery sheath **504** for LAA **502** access, the size of the neck diameter and morphology of the LAA **502** preferably is determined by advancing the delivery sheath **504** to the distal portion of the LAA **502** and injecting contrast media to obtain an initial left atrial appendogram. The neck diameter preferably is measured approximately 5 mm in from the ostium of the LAA **502** at end diastole.

[**0228**] In one embodiment, the system and method preferably allows for selection and preparation of a deployment system **300**. A deployment system **300** preferably comprises an implant **304** of an appropriate size for placement in a patient. Initially, the implant **304** preferably is in an expanded configuration, with axially moveable core **312** engaging slider assembly **400**, as described above. The recapture sheath **514** preferably is positioned so it covers and supports the flexible segment **558** of the delivery system **500**, wherein the flexible catheter section **562** of deployment catheter **302** and flexible core section **564** of axially moveable core **312** are aligned. The Touhy-Borst valve **532** preferably is tightened over the deployment catheter **516** to prevent relative movement between recapture sheath **514** and deployment catheter **516**. The loading collar **510** and peel-away sheath **512** preferably are positioned so they are at the base of the recapture flares **528**, proximal thereto.

[**0229**] The delivery system **500** preferably is loaded by rotating the control knob **542** counterclockwise until the implant **304** is fully collapsed. Preferably, at least a portion of the control line **328** is coupled with the control knob **542** such that rotation of the control knob **542** in the counterclockwise direction retracts at least a portion of the control line **328**. Retraction of the control line **328** preferably places tension on the proximal hub **324** of the implant **304**, because a portion of the control line **328** preferably is coupled with the proximal hub **324** by a pin **329**. While the distal portion of the axially moveable core **312** engages slider assembly **400** and applies a distal force to distal hub **314** of the implant **304**, tension in the control line **328** preferably causes the proximal hub **324** of the implant **304** to move proximally relative the axially moveable core **312**, thereby collapsing the implant **304**.

[**0230**] The diameter of the implant **304** preferably is reduced to approximately $\frac{1}{3}^{rd}$ or less of its original diameter

when collapsed. The loading collar **510** and peel-away sheath **512** are then advanced distally over the flares **528** and implant **304** until the distal tip of the implant **304** is aligned with the distal end of the peel-away sheath **512** and the distal end of the loading collar is about 1.5 cm from the distal tip of the implant At this point, the flares **528** partially cover the implant. The loading collar **510** preferably is removed and discarded.

[**0231**] With the implant **304** partially within the recapture sheath **514** and retracted within the peel-away sheath **512**, the entire system preferably is flushed with sterile heparinized saline after attaching stopcocks to the recapture sheath injection port **588**, the proximal injection port **546** and distal injection port **548** of the delivery system **500**. The recapture sheath **514** and the Touhy-Borst valve **532** are first thoroughly flushed through port **588**. Then the distal injection port **548** and the proximal injection port **546** of the deployment handle **538** are preferably flushed through. The distal injection port **548** is in fluid communication with lumen **426** of axially moveable core **312**, and proximal injection port **546** is in fluid communication with injection lumens **554** of multilumen shaft **540**. The delivery sheath **504** placement preferably is reconfirmed using fluoroscopy and contrast media injection.

[**0232**] The delivery system **500**, as described above, with implant **304** inserted therein, preferably is then inserted into the proximal end of the delivery sheath **504**. To avoid introducing air into the delivery sheath **504** during insertion of the delivery system **500**, a continual, slow flush of sterile heparinized saline preferably is applied through the proximal injection port **546** of the deployment handle **538** to the distal end of the deployment catheter **516** until the tip of the peel-away sheath **512** has been inserted into, and stops in, the hemostatic valve of the delivery sheath **504**. Preferably, the distal tip of the peel-away sheath **512** is inserted approximately 5 mm relative to the proximal end of the delivery sheath **504**.

[**0233**] Under fluoroscopy, the recapture sheath **514** and deployment catheter **516** preferably are advanced, relative to the peel-away sheath **512**, approximately 20-30 cm from the proximal end of the transseptal sheath, and the system **500** preferably is evaluated for trapped air. The peel-away sheath **512** is preferably not advanced into the delivery sheath **504** due to the hemostasis valve **596** blocking its passage. If air is present in the system **500**, it may be removed by aspirating through the distal injection port **548**, recapture sheath injection port **588**, or proximal injection port **546**. If air cannot be aspirated, the deployment catheter **516** and recapture sheath **514** preferably are moved proximally and the delivery system **500** preferably is removed from the delivery sheath **504**. All air preferably is aspirated and the flushing/introduction procedure preferably is repeated.

[**0234**] The peel-away sheath **512** preferably is manually slid proximally to the proximal end **534** of the recapture sheath **514**. The Touhy-Borst valve **532** preferably is loosened and the deployment catheter **516** preferably is advanced distally relative to the recapture sheath **514** until the deployment handle **538** is within about 2 cm of the Touhy-Borst valve **532** of the recapture sheath **514**. This causes the implant **304** to be advanced distally within the delivery sheath **504** such that the recapture sheath **514** no longer covers the implant **304** or the flexible section **558**. The Touhy-Borst valve **532** preferably is tightened to secure the deployment catheter **516** to fix relative movement between the deployment catheter **516** and recapture sheath **514**.

[**0235**] Under fluoroscopy, the implant **304** preferably is advanced to the tip of the delivery sheath **504** by distal movement of the delivery catheter **302**. The distal hub **314** of implant **304** preferably is aligned with a delivery sheath-tip radiopaque marker **590**. Under fluoroscopy, the sheath **504** positioning within the LAA **502** preferably is confirmed with a distal contrast media injection.

[**0236**] The position of the implant **304** preferably is maintained by holding the deployment handle **538** stable. The delivery sheath **504** preferably is withdrawn proximally until its tip radiopaque marker **590** is aligned with the distal end of the deployment catheter flexible segment **558**. This preferably exposes the implant **304**.

[**0237**] Under fluoroscopy, the implant **304** preferably is expanded by rotating the control knob **542** clockwise until it stops. Rotating the control knob **542** preferably releases tension on the control line **328**, preferably allowing the implant **304** to expand. The implant **304** preferably is self-expanding. After expansion, any tension on the LAA **502** preferably is removed by carefully retracting the deployment handle **538** under fluoroscopy until the radiopaque marker **586** on the axially movable core **312** moves proximally approximately 1-2 mm in the guide tube **320**. The position of the implant **304** relative the LAA **502** preferably is not altered because the axially movable core **312** preferably is coupled with the slider assembly **400** allowing for relative movement between the implant **304** and the axially movable core **312**. The slider assembly **400** preferably allows for the distal portion of the axially movable core **312** to be slightly retracted proximally from the distal hub **314** of the implant **304**, thereby removing any axial tension that may be acting on the implant **304** through the axially movable core **312**. The radiopaque marker **586** preferably is about 1-2 mm proximal from the implant **304** distal hub **314**, and the delivery sheath **592** tip preferably is about 2-3 mm proximal from the implant proximal hub **324**, thereby indicating a neutral position.

[**0238**] Under fluoroscopy, the expanded diameter (Ø in **FIG. 30**) of the implant **304** preferably is measured in at least two views to assess the position of the implant within the LAA **502**. The measured implant diameter Ø preferably is compared to the maximum expanded diameter.

[**0239**] Preferably, the labeled proximal and distal injection ports **546**, **548** of the deployment handle **538** shown in **FIG. 32**, correlate with the proximal and distal contrast media injections. The proximal contrast media injections are delivered through the delivery catheter lumen **554** to a location proximal to the implant **304**. The distal contrast media injections are delivered through the axially movable core **312** to a location distal to the implant **304**. Proximal contrast media injections preferably are completed in two views. If the injection rate is insufficient, the recapture sheath injection port **588** may be used independently or in conjunction with the proximal injection port **546** to deliver fluid to a location proximal to the implant **304**.

[**0240**] If satisfactory results are seen, any transverse tension on the LAA **502** preferably is released by exposing the

flexible segment **558** of the delivery system **500**. The flexible catheter section **562** and the flexible core section **564** preferably are linearly co-located to cooperate as the flexible segment **558** of the delivery system **500**. This preferably is accomplished by retracting the delivery sheath **504** proximally approximately 2 cm to expose the flexible segment. By exposing the flexible segment **558**, the flexible segment **558** preferably will flex to allow the implant **304** to sit within the LAA **502** free from transverse forces that may be created, for example, by contractions of the heart acting against the delivery sheath **504** or deployment catheter **516**.

[**0241**] Once the flexible segment **558** is exposed, distal contrast media injections preferably are completed in at least two views to verify proper positioning of the implant **304**. A flush of saline preferably is used as needed between injections to clear the contrast media from the LAA **502**. Following the contrast media injections, the delivery sheath **504** preferably is advanced distally to cover the flexible segment **558**.

[**0242**] If implant **304** position or results are sub-optimal, the implant **304** preferably may be collapsed and repositioned in the LAA **502**. To achieve this, under fluoroscopy, the deployment handle **538** preferably is advanced distally to place the radiopaque marker **586** of the axially moveable core **312** at the distal hub **314** of the implant **304**. The distal end of the delivery sheath **504** preferably is aligned with the distal end of the flexible segment **558**. The control knob **542** preferably is rotated until the implant **304** has been collapsed to approximately $\frac{1}{3}^{rd}$ or less of its expanded diameter. The control knob **542** preferably acts on the control line **328** to place tension on the proximal hub **324** of the implant **304**, pulling the proximal hub **324** of the implant **304** proximally relative the distal hub **314** of the implant **304** to collapse the implant **304**. The implant **304** preferably can be repositioned and re-expanded.

[**0243**] The stability of the implant **304** preferably is verified in several views. Stability tests preferably are preformed in the following manner. A contrast media filled syringe preferably is connected to the distal injection port **548** of the deployment handle **538**. Under fluoroscopy, at least about a 10 mm gap between the tip of the delivery sheath **504** and the proximal hub **222** of the implant **304** is preferably confirmed.

[**0244**] The stability of the implant **304** in the LAA **502** preferably is evaluated using fluoroscopy and echocardiography. The recapture sheath Touhy-Borst valve **532** preferably is loosened. Then the deployment handle **538** preferably is alternately retracted and advanced about 5-10 mm while maintaining the position of the delivery sheath **504** and simultaneously injecting contrast media through the distal injection port **548**. This tests how well the implant is held within the LAA **502**.

[**0245**] If the implant stability tests are unacceptable, the implant **304** preferably may be collapsed and repositioned as described above. If repositioning the implant **304** does not achieve an acceptable result, the implant **304** preferably may be collapsed and recaptured as described further below.

[**0246**] The implant **304** preferably meets the following acceptance criteria, associated with the assessment techniques listed below, prior to being released. The assessment techniques to be evaluated preferably include 1) residual compression; 2) implant location; 3) anchor engagement; 4) seal quality; and 5) stability. For residual compression, the implant diameter Ø, as measured by fluoroscopic imaging, preferably is less than the maximum expanded diameter of the implant **304**. For implant location, the proximal sealing surface of the implant **304** preferably is positioned between the LAA **502** ostium and sources of thrombus formation (pectinates, secondary lobes, etc.) (preferably imaged in at least two views). For anchor engagement, the implant frame **506** preferably is positioned within the LAA **502** so as to completely engage a middle row of anchors **195** in an LAA **502** wall (preferably imaged in at least two views). For seal quality, the contrast injections preferably show leakage rated no worse than mild (preferably defined as a flow of contrast media, well defined, and filling one-third of the LAA **502** during a proximal injection over a period of up to about five ventricular beats, preferably imaged in at least two views). For stability, there preferably is no migration or movement of the implant **304** relative to the LAA **502** wall as a result of the Stability Test.

[**0247**] If implant recapture is necessary, because a different size implant **304** is necessary or desired, or if acceptable positioning or sealing cannot be achieved, the implant **304** preferably is fully collapsed as described above. Once the implant **304** is collapsed, the locking collar **522** of the peel away sheath **512** preferably is unlocked. The peel-away portion **524** of the peel-away sheath **512** preferably is split up to the reinforced section **526** and removed. The reinforced section **526** of the peel-away sheath **512** preferably is slid proximally to the hub of the recapture sheath **514**. The Touhy-Borst valve **532** on the proximal end of the recapture sheath **514** preferably is slightly loosened to allow smooth movement of the sheath **514** over deployment catheter **516** without allowing air to enter past the Touhy-Borst valve **532** seal. By removing the peel-away portion **524** of peel-away sheath **512**, the recapture sheath **514** can now be advanced further distally relative to the transseptal sheath.

[**0248**] While holding the deployment catheter **516** and delivery sheath **504** in place, the recapture sheath **514** preferably is advanced distally into the delivery sheath **504** until a half marker band **536** on the recapture sheath **514** is aligned with a full marker band **590** on the delivery sheath **504**. This preferably exposes the recapture flares **528** outside the transseptal sheath.

[**0249**] The collapsed implant **304** preferably is retracted into the recapture sheath **514** by simultaneously pulling the deployment handle **538** and maintaining the position of the recapture sheath **514** until approximately half the implant **304** is seated in the recapture sheath **514**. The Touhy-Borst valve **532** on the recapture sheath **514** preferably is tightened over the deployment catheter **516**. The recapture sheath **514** and implant **304** preferably are retracted into the delivery sheath **504** by pulling on the recapture sheath **514** while maintaining the position of the delivery sheath **504**, preferably maintaining left atrial access. The recapture flares **528** of the recapture sheath **514** preferably cover at least some of the anchor elements **195** on the implant **304** as the implant is retracted proximally into the delivery sheath **504**. Further details are described above with respect to **FIGS. 20A-20C**.

[**0250**] If the implant's position and function are acceptable, and implant recapture is not necessary, the implant **304** preferably is released from the delivery system **500**. Under

fluoroscopy, the delivery sheath **504** preferably is advanced to the proximal hub **324** of the implant **304** for support. The release knob **544** on the proximal end of the deployment handle **538** preferably is rotated to release the implant **304**. Rotating the release knob **544** preferably causes a threaded portion **584** of the distal shaft **578** of the axially movable core **312** to rotate with respect to the slider assembly **400** such that the threaded section **584** preferably is decoupled from the slider assembly **400**. Under fluoroscopy, after the axially movable core **312** is decoupled from the implant **304**, the release knob **544** preferably is retracted until the distal end **578** of the axially movable core **312** is at least about 2 cm within the delivery sheath **504**.

[**0251**] Under fluoroscopy, while assuring that transseptal access is maintained, the delivery system **500** preferably is retracted and removed through the delivery sheath **504**. Under fluoroscopy, the delivery sheath **504** position preferably is verified to be approximately 1 cm away from the face of the implant **304**. Contrast injections, fluoroscopy and/or echocardiography preferably may be used to confirm proper positioning and delivery of the implant **304** and containment of the LAA **502**. The delivery sheath **504** preferably is withdrawn.

[**0252**] In addition to the aforementioned techniques, an implant as described above can be delivered, e.g., using conventional transthoracic surgical, minimally invasive, or port access approaches. Delivery can be made or done in conjunction with surgical procedures. Implant **304**, for example, can be used in conjunction with various surgical heart procedures related to the heart (e.g., mitral valve repair) or surgical procedures in the region surrounding the heart. The delivery system **500** and delivery sheath **504** can be used to locate and deploy the implant **304** in order to prevent the passage of embolic material from the LAA, such that thrombus remains contained in the LAA **502**. Thrombus remains contained in the LAA **502** because the implant **304** inhibits thrombus within the LAA **502** from passing through the orifice of the LAA **502** and into the patient's blood stream. Additionally, the deployed implant **304** located in the LAA **502** can provide a smooth, non-thrombogenic surface facing the left atrium. Preferably, the smooth, non-thrombogenic surface facing the left atrium will not promote blood clots to form proximate to the LAA **502**. Access to the heart may be provided by surgical procedures in order to deploy the implant **304** in the LAA **502**. That is, the implant **304** can be deployed as an adjunct to surgical procedures. Access to the left atrium is provided in one embodiment by obtaining a left atrium access path. The delivery sheath **504** can be located along the left atrium access path to define a delivery path. The delivery system **500** can be used to deliver the implant **304** along the delivery path to a position for deployment. The implant **304** located in the position for deployment can be deployed to block the LAA **502**. There are many methods of delivering and deploying the implant **304** as described in further detail below.

[**0253**] In particular, access to the heart of a patient can be provided by various techniques and procedures so that implant **304** can delivered and deployed in the heart. For example, minimally invasive surgery techniques, laparoscopic procedures and/or open surgical procedures can provide the left atrium access path to the heart. In one embodiment, access to the LAA can be provided by access through the chest of the patient, and may include, without limitation, conventional transthoracic surgical approaches, open and semi-open heart procedures, laparoscopic, and port access techniques. Such surgical access and procedures preferably will utilize conventional surgical instruments for accessing the heart and performing surgical procedures on the heart, for example, retractors, rib spreaders, trocars, laparoscopic instruments, forceps, scissors, shears, rongeurs, clip appliers, staplers, sutures, needle holders, bulldogs, clamps, elevators, cauterizing instruments or substances, electrosurgical pens, suction apparatuses, approximators, and/or the like. The implant can be conveniently deployed as an adjunct to a surgical heart procedure, such that the implant can be delivered at the LAA without performing additional complicated procedures for gaining access to the LAA. As used herein the phrase "surgical heart procedure" is a broad phrase and is used in accordance with its ordinary meaning and may include, without limitation, open procedures, semi-open procedures, laparoscopic procedures, open heart surgery and may include procedures for replacing and/or repairing portions of the heart. In one non-limiting exemplifying embodiment, surgical heart procedures include treatment of the heart, such as aortic valve repair, mitral valve repair, pulmonary valve repair, and/or replacement of a heart valve (e.g., a diseased aortic, mitral, or pulmonary valve) with an artificial valve or prosthesis. The known conventional surgical instruments for accessing the heart and performing surgical procedures on the heart can be used in combination with instruments used for these heart treatments. For example, sizing rings, balloons, calipers, gages, and the like can be employed to match an implant/device (such as artificial valve or prosthesis) to an anatomical structure of the heart.

[**0254**] Many times, the access techniques and procedures can be performed by the surgeon and/or a robotic device, such as robotic systems used for performing minimally invasive heart surgery. Those skilled in the art recognize that there are many different ways the heart can be accessed.

[**0255**] In one embodiment, the access to the left atrium can be obtained by creating a left atrium access path. The left atrium access path is a path the can be used to locate the delivery sheath into a patient's body for implant **304** delivery. The left atrium access path can be obtained before, during, or after another surgical heart procedure (e.g., mitral valve repair), which many times can provide the left atrium access path. The left atrium access path can be sized to allow the passing of the delivery sheath **504** along the left atrium access path without injuring the patient. The techniques and procedures for obtaining the left atrium access path can be performed by the surgeon and/or a robotic device.

[**0256**] The left atrium access path can be disposed in various locations in the patient's body. For example, the left atrium access path can be located within the pulmonary vein and to the left atrium. In another embodiment, the left atrium access path can be located outside of the heart and through the wall of the left atrium and into the left atrium. In another embodiment, the left atrium access path is located within the right atrium through a transseptal puncture and passes into the left atrium. In another embodiment, the left atrium access path is located through an opening, for example obtained during an open heart procedure, in the wall of left atrium and into the left atrium. Those skilled in the art recognize that the left atrium access path can be located in various other positions.

[0257] The delivery sheath **504** can be positioned along the left atrium access path and can define a delivery path for the delivery of the implant **304**. The delivery path is disposed within and along the delivery sheath **504**. The delivery sheath **504** is sized to permit the implant **304** to pass along the delivery path through the delivery sheath **504** and out of a distal end **702** of the delivery sheath **504** (as shown in **FIG. 30**). The delivery sheath **504** can be configured for particular left atrium access paths, which are described herein. The delivery sheath **504**, of course, can be used with the delivery system **500** and **300**, as described above.

[0258] In the illustrated embodiment of **FIG. 40**, the implant **304** can be delivered along a delivery path **901** that passes through the pulmonary vein **904** and through the left atrium to the LAA **502**, e.g., the distal end **702** of the delivery sheath **504** can be positioned for delivery and deployment of the implant **304**. The delivery path **901** can be positioned by inserting the distal end **702** of the delivery sheath **504** into the pulmonary vein **904** and advancing the distal end **702** of the delivery sheath **504** along the pulmonary vein **904** towards the wall of the left atrium. The sheath **504** can be delivered to the pulmonary vein, for example, in a surgical heart procedure, such as in conventional open procedure through the chest of a patient, or in a laparoscopic approach through the chest using trocars and other instruments to direct the delivery sheath **504** to the pulmonary vein. The distal end **702** of the delivery sheath **504** can pass through the chamber of the left atrium such that the distal end **702** of the delivery sheath **504** is proximate to the orifice of the LAA **502**. The implant **304** can be delivered through the delivery sheath **504** and along the delivery path **901** as indicated by the arrows. Thus, the delivery sheath **504** defines the delivery path **901** that passes through the pulmonary vein **904**, the chamber of the left atrium, and is used to deliver the implant **304** to the LAA **502**. Delivery and deployment of the implant **304** can be accomplished using the techniques as described above, or other suitable techniques. In some non-limiting exemplifying embodiments, the delivery sheath **504** has length that is greater than about 15 cm. In some non-limiting exemplifying embodiments, the delivery sheath **504** has a length of about 50 cm or less, and even more preferably about 45 cm or less, about 40 cm or less, about 35 cm or less, about 30 cm or less, about 25 cm or less, about 20 cm or less, about 15 cm or more, or even ranges encompassing such lengths. The delivery sheath **504** can have a length suitable for allowing the surgeon to easily position the delivery sheath **504** through the pulmonary vein (or along other delivery paths described below). For example, in an open procedure, one hand of the surgeon can position the delivery sheath **504** in the heart and the other hand of the surgeon can hold and position the proximal end of delivery sheath **504** outside of chest cavity. Thus, a person can manually position the delivery sheath **504** to deliver the implant into the LAA. Many times, conventional sheaths are long and therefore awkward to stabilize and may be difficult to position both ends of the conventional sheath. Alternatively, the delivery sheath **504** can be positioned by a robotic system, multiple surgeons, and/or other suitable means for positioning.

[0259] In the illustrated embodiment of **FIG. 41**, the implant **304** can be delivered along a delivery path **910** that passes directly through an opening **912** in the wall of the left atrium. In some embodiments, the opening **912** is formed in an outer wall **913** of the left atrium. The outer wall **913** forms a portion of the outer surface **915** of the heart. The opening **912** is preferably spaced from the LAA **502** so that the delivery sheath **504** can be easily positioned near the LAA **502**. For example, the opening **912** can be spaced from the orifice of the LAA **502** by a distance of about 1 to 10 cm, more preferably about 5 cm. However, the opening **912** can be formed at any point along the outer wall **913**. For example, the opening **912** can be formed in the wall of the LAA **502**. The opening **912** is configured and sized to receive the delivery sheath **504**. In some exemplifying non-limiting embodiments, the cross sectional area of the delivery sheath **504** is equal to or more than about 30% of the area of the opening **912**. The cross-sectional area of the delivery sheath **504** can be equal to or more than 40%, 50%, 60%, 70%, 80%, 90%, and ranges encompassing such percentages of the area of the opening **912**. Thus, the delivery sheath **504** can be conveniently inserted through the opening **912** and maneuvered within the left atrium.

[0260] The illustrated delivery path can be positioned by passing the distal end **702** of the delivery sheath **504**, which is located outside of the heart, through the wall **913** of the left atrium and into the chamber of the left atrium. It will be appreciated that the sheath **504** may be steered or turned to the desired location. The delivery sheath preferably has a length suitable for accessing the opening **912** and the LAA **502** from outside the heart and outside the patient, more preferably about 80 cm or less, and even more preferably about 70 cm or less, about 50 cm or less, about 30 cm or less, about 10 cm or less, or even ranges encompassing these lengths. As discussed above, the surgeon can easily position the delivery sheath **504**. The delivery sheath **504** is distally advanced to a position for deployment, such that the distal end **702** of the delivery sheath **504** is proximate to the orifice of the LAA **502**. The implant **304** can be delivered through the delivery sheath **504** and along the delivery path **910** as indicated by the arrows. Thus, the delivery sheath **504** defines the delivery path that passes directly through the wall of the left atrium and is used to deliver the implant **304** to the LAA **502**.

[0261] In the illustrated embodiment of **FIG. 42**, the implant **304** can be delivered along a delivery path **920** that passes through the right atrium, a transseptal puncture **930**, and the left atrium. The delivery path can be positioned by passing the distal end **702** of the delivery sheath **504** through the right atrium and towards the transseptal puncture **930**. The transseptal puncture is sized and located to allow the distal end **702** of the delivery sheath **504** to pass through the transseptal puncture **930** and into the left atrium. The distal end **702** of the delivery sheath **504** is moved proximate to the orifice of the LAA **502** for the delivery and deployment of implant **304** by distally advancing the delivery sheath **504** through the right atrium and the transseptal puncture **930**. The implant **304** can be delivered through the delivery sheath **504** and along the delivery path **920** as indicated by the arrows. Thus, the delivery sheath **504** defines a delivery path that passes through the right atrium, the transseptal puncture **930**, and the left atrium. Access can be gained to the right atrium, for example, through the superior vena cava (as discussed above) or through the inferior vena cava. Access to the right atrium through the inferior vena cava can be obtained by advancing the delivery sheath **504** over the guidewire disposed within the inferior vena cava and the right atrium. Thus, the delivery sheath **504** can define a delivery path **920** that passes through the superior or inferior

vena cava, the right atrium, and the transseptal puncture **930** and into the left atrium. Alternatively, the delivery path can comprise a pre-existing septal defect such as a hole (an atrial septal defect) or a tunnel (a patent foramen ovale).

[**0262**] As discussed above, the delivery sheath **504** can have various configurations that facilitate the delivery and deployment of the implant **304**. For example, the delivery sheath **504** used for defining the delivery path through the pulmonary vein and the left atrium may have different shape and size than the delivery sheath **504** used for defining a delivery path directly through the wall of the left atrium. In particular, the length of the delivery sheath **504**, which is used by passing the delivery sheath **504** through the pulmonary vein, may be different than the length of the delivery sheath **504**, which is used by passing the delivery sheath **504** through the wall of the left atrium. Thus, the configuration of the delivery sheath **504** can ensure that the implant **304** can be delivered to the proper location in the heart even though a plurality of left atrium access paths can be used to deliver the implant **304** to the LAA **502**. The delivery sheath **504** can have various cross sectional profiles, curves, shapes and sizes to ensure that the implant **304** can be properly delivered and deployed. For example, a distal portion of the delivery sheath **504** can be configured to deliver the implant **304** within the LAA **502**. Preferably, the distal portion of the delivery sheath **504** can be configured (e.g., having pre-shaped or permanent curves) in order to locate the distal end **702** of the delivery sheath **504** within the LAA **502**. The curvature of the distal end **702** of delivery sheath **504** can be similar to the curvature of the LAA **502** such that the distal end **702** can be distally advanced within the LAA **502**. Further, the distal portion of the delivery sheath **504** can be an atraumatic soft-tip to prevent injury to the patient.

[**0263**] As shown in **FIG. 39**, a transition catheter or member **704** can be used with the delivery sheath **504** for easy handling and preventing injuries. The transition catheter **704** can be disposed within the delivery sheath **504** so that distal end **702** of the delivery sheath **504** is proximate to the distal end of the transition catheter **704**. While the transition catheter **704** is disposed within the delivery sheath **504**, the delivery sheath **504** can be put into the patient to define the delivery path for the implant **304**. In one embodiment, the distal end of the transition catheter **704** can be a smooth, round top. The smooth, round top can prevent damage to the distal end **702** of the delivery sheath **504**, for example, by providing structural support to the distal end **702** of the delivery sheath **504**. Additionally, the smooth, round top can prevent injury to the patient by providing an atraumatic surface that contacts the patient thereby preventing contact between the distal end **702**. After the delivery sheath **504** is properly located, the transition catheter **704** can be removed from the delivery sheath **504**. Then the implant **304** can be inserted into the sheath **504** and delivered, as described above.

[**0264**] In one embodiment, the delivery sheath **504** can be advanced over a guidewire, not shown, for accessing the LAA **502** of a patient. For example, the guidewire can be disposed directly through the wall of the left atrium, e.g., along a left atrium access path through the wall of the left atrium. The delivery sheath **504** can be advanced over the guidewire and directly through the wall of the left atrium and towards the LAA **502**. Additionally, the positioning of the delivery sheath **504** can be aided by various techniques, such as direct visualization from the exterior surface of the heart, visualization through the use of echocardiography (e.g., Intracardiac Echo or Transsesophogeal Echo), visualization through optics including through thoracoscopes, or through the use of X-Ray fluoroscopy. These techniques can aid the surgeon to properly advance and locate the delivery sheath **504**.

[**0265**] After the delivery sheath **504** is in the desired position, the implant **304** can be deployed as described above. Generally, once the delivery sheath **504** is in deployment position, the delivery catheter **360** can be inserted into the delivery sheath **504**. The delivery catheter has an appropriate length corresponding to the length of the delivery sheath, as selected for a desired access technique. For example, in a procedure through the wall of the left atrium or in an open procedure, as described herein, the delivery catheter, like the delivery sheath, may have a length of about 110 cm or less, and even more preferably about 80 cm or less, about 50 cm or less, about 30 cm or less, or even about 20 cm or less. In some embodiments, the delivery catheter has a length that is slightly greater than the delivery sheath. For example, the delivery catheter can have a length that is about 10 cm to about 30 cm greater than the length of the delivery sheath. For example, the delivery catheter can have a length that is about 10 cm greater than the length of the delivery sheath, about 15 cm greater than the length of the delivery sheath, about 20 cm greater than the length of the delivery sheath, about 25 cm greater than the length of the delivery sheath, about 30 cm greater than the length of the delivery sheath, and ranges encompassing these lengths. The implant **304** is collapsed and then the loading collar **510** and the peel-away sheath **512** are advanced distally over the flares **528** and the implant **304** until the distal tip of the implant **304** is aligned with the distal end of the peel-away sheath **512** and the distal end of the loading collar **510**. The loading collar **510** can then be removed resulting in the collapsed implant **304** located partially within the recapture sheath **514** and retracted within the peel-away sheath **512**, and the entire system is flushed.

[**0266**] The implant **304** is inserted in the delivery sheath **504** and is advanced through the delivery sheath **504** by distal movement of the delivery catheter **360**. The implant **304** is aligned and positioned for deployment. Preferably, the implant **304** can maintain proper position by holding the deployment handle **538** in a particular position. The delivery sheath **504** can move proximally until the implant **304** is exposed. The surgeon can adjust the position of the implant **304** by collapsing the implant **304** and repositioning the implant **304**, and the repositioned implant **304** can be re-expanded. The implant **304** can be released from the delivery system **500** after the implant **304** is properly positioned because recapture may not be necessary. The delivery system **500** preferably is retracted and removed through the delivery sheath **504**. There are various techniques (e.g., contrast injections, fluoroscopy, thoracoscopy, and/or echocardiography) to confirm proper positioning and delivery of the implant **304** and containment of thrombus within the LAA **502**. The delivery sheath **504** preferably is withdrawn along the left atrium access path.

[**0267**] Thus, the delivery system **500** can be configured and sized to locate and deploy the implant **304** in the LAA **502** as an adjunct to many surgical procedures which may or may not be related to the LAA **502**. Depending on the

surgical procedure, one of the various embodiments of the delivery system **500** may be more conveniently used than other embodiments of the delivery system **500** to deploy the implant **304**.

[**0268**] In the illustrated embodiment of **FIG. 41A**, the implant **304** can be delivered along a delivery path **910**A that passes through an open left atrium. A surgical procedure, such as open heart valve surgery, provides the open left atrium for convenient access to the LAA **502**. The surgical procedure can form an opening in the chest of a patient suitable for open heart procedures. For example, the opening in the chest can be formed by a sternotomy incision. In one embodiment, the delivery path **910**A can be positioned by passing the distal end **702** of the delivery sheath **504** through the opening in the left atrium obtained for open heart surgery. The delivery sheath **504** in this embodiment may have a length of about 80 cm or less, about 70 cm or less, about 50 cm or less, about 30 cm or less, or even about 10 cm or less. In one embodiment, the delivery sheath has a length of about 1 to 10 cm. As discussed above, the surgeon can easily manually position the delivery sheath **504**. Thus, the delivery system **500** can be used to locate and deploy the implant **304** to occlude the LAA **502**. During open heart surgery, the delivery system **500** can be used without the recapture sheath **514** because of the accessibility of the LAA **502** and convenience of deploying the implant **304**. Those skilled in the art recognize that various catheters (e.g., delivery sheath **504** and/or recapture sheath **514**) can be used with the delivery system **500**. If the delivery sheath **504** is used during open heart surgery, the delivery sheath **504** is preferably generally straight and has a length less than the length of the delivery sheath **504** used, e.g., for implant **304** delivery through the femoral vein. Similarly, the length of the delivery system **500** used for delivering the implant **304** along the delivery path **910**A is preferably less than the length of the delivery system **500** used to deliver the implant **304** through the femoral vein.

[**0269**] In one embodiment, a deployment catheter **516**A (shown in **FIG. 43**) is used in conjunction with open heart surgery. In one embodiment, the deployment catheter **516**A is used without a delivery sheath. The deployment catheter **516**A has the deployment handle **538** connected to a shaft **603**. The implant **304** is located near a distal end **605** of the shaft **603**. The core **312** extends axially throughout the length of the shaft **603** and can be attached at its distal end to the implant **304**. The pull wire or control line **328** extends proximally throughout the length of the shaft **603** to the deployment handle **538**. The shaft **603** can be sized and configured so that the implant **304** can be easily located and deployed within the LAA **502**. In one embodiment, for example, shaft **603** has a length in the range of about 5 cm to 15 cm, more preferably in the range of about 9 cm to 11 cm. It will be appreciated that the shaft **603** may have any suitable length for access the LAA in an open procedure, such as about 80 cm or less, about 70 cm or less, about 50 cm or less, or about 30 cm or less. The shaft **603** can be a multi-lumen shaft, similar to the shaft **540** shown in **FIG. 32A**. The shaft **603** preferably comprises the core lumen **550** for holding the axially moveable core **312**, the control line lumen **552** and two proximal injection lumens **554** in communication with proximal injection port **546**. The control line **328** preferably extends through the control line lumen **552** and preferably couples to the proximal hub **324** of the implant **304** to the deployment handle control knob **542**, allowing for implant **304** expansion and collapse. Thus, during open heart surgery, for example, the implant **304** can be passed directly into the left atrium of the open heart and along the delivery path **910**A and into the LAA **502**. Implant **304** is collapsed, preferably before it is passed through the left atrium and into the LAA **502**, by rotating the control knob **542** counterclockwise until the implant **304** is fully collapsed. The counterclockwise motion of the control knob **542** retracts at least a portion of the control line **328** and places tension on the proximal hub **324** of the implant **304**. While the distal portion of the axially moveable core **312** engages slider assembly **400** and applies a distal force to the distal hub **314** of the implant **304**, tension in the control line **328** preferably causes the proximal hub **324** of the implant **304** to move proximally relative to the axially moveable core **312**, thereby collapsing the implant **304**. In one embodiment, the deployment catheter **516**A comprises a multi-lumen shaft **603**A (shown in **FIGS. 44 and 45** without the control line **328**) comprising the core lumen **550** for holding the axially moveable core **312** and the control line lumen **552**. Although not illustrated, the deployment catheter **516**A can be used with a delivery sheath **504** to aid in the delivery and deployment of the implant **304**.

[**0270**] As shown in **FIG. 45**, an insertion tool **538**A comprises the shaft **603**A connected to a handle **610** having a lever or trigger **612**. The trigger **612** can be moved towards the handle **610** thereby causing the implant **304** to collapse. In one embodiment, the control line **328** is coupled to the trigger **612** such that movement of the trigger **612** towards the handle **610** retracts at least a portion of the control line **328**, thereby placing tension on the proximal hub **324** of the implant **304**. The tension in the control line **328** causes the proximal hub **324** of the implant **304** to move proximally relative to the axially moveable core **312**, thereby collapsing the implant **304**. As tension on the pull wire **328** is reduced by moving the trigger **612** away from the handle **610**, the implant **304** assumes its expanded diameter configuration by bending under its own bias. Advantageously, the insertion tool **538**A can facilitate proper placement of the implant **304**, and the grip **310** can be shaped to conveniently fit the hand of a user. In one embodiment, for example, shaft **603**A has a length in the range of about 5 cm to 15 cm, more preferably in the range of about 9 cm to 11 cm, so that the implant **304** can be easily located and deployed in the LAA **502**. Those skilled in the art recognize that the various catheters (e.g., delivery sheath **504** and/or recapture sheath **514**) can be used with the delivery system **500** shown in **FIG. 45**.

[**0271**] The implant **304** can also be manually deployed in the LAA **502**, preferably during open heart surgery. Thus, the implant **304** can be positioned and deployed within the LAA **502** without the use of a delivery system. For example, the surgeon can manually hold the implant **304** and pass the implant **304** into the opened heart, through the left atrium, and into the LAA **502**. The surgeon can manually apply an inward radial force to the frame **14** to collapse the implant **304** for convenient positioning at the desired site. After the implant **304** is placed within the LAA **502**, the implant **304** can assume its expanded configuration by bending under its own bias. Of course, to move the implant **304** into the LAA **502**, the surgeon can provide a distal force on the proximal hub **324** of the implant **304** in the direction of the LAA **502**. For example, because of the open access to the left atrium during open heart surgery, the surgeon's thumb can be conveniently used to push on the proximal hub **324** of the

implant **304** to move the implant **304** into the LAA **502**, even though the implant **304** engages with the wall of the LAA **502** because of the implant **304** biasing to the expanded configuration. The surgeon can manually apply an inward radial force to the implant **304** to collapse the implant **304** for convenient repositioning or removal of the implant **304**.

[**0272**] As illustrated in the partial cross-sectional view of **FIG. 46** and **FIG. 47**, in another embodiment of a delivery system a delivery sheath **1002** surrounds the implant **304** and a portion of a push rod **1010**. The sheath **1002** has a sheath wall **1003** defining an inner surface **1008** that engages with the implant **304** to keep the implant **304** in the collapsed position. The push rod **1010** has a distal end **1012** that can contact the proximal hub **324** of implant **304**. When the push rod **1010** is moved in the distal direction the distal end **1012** contacts and causes the implant **304** to move in the distal direction. Those skilled in the art recognize that the distal end **1012** may or may not be coupled to the proximal hub **324**. When the implant **304** moves out of the sheath **1002**, the implant **304** can expand and assume its expanded diameter configuration by bending under its own bias. Preferably, the implant **304** is passed through the sheath **1002** and deployed in the LAA **502** as an adjunct to open heart surgery. For example, during open heart surgery, the surgeon can hold and move the proximal end **1013** of the push rod **1010** in the distal direction. The push rod **1010** and implant **304** move together in the distal direction towards a distal end **1004** of the sheath **1002**. As the implant **304** moves out of an opening **1005** of the sheath **1002**, the implant **304** can expand under its own bias. Preferably, the distal end **1004** of the sheath **1002** is located proximate to the opening of the LAA **502** so that the implant **304** expands within the LAA **502** upon exiting the sheath **1002**. After the implant **304** is expanded in the LAA **502**, the sheath **1002** and the push rod **1010** can be removed from the open heart. Of course, the surgeon can adjust the position of the implant **304** within the LAA **502**. For example, as discussed above, the surgeon can manually provide a distal or proximal force on the proximal hub **324** to move the implant **304** relative to the LAA **502**.

[**0273**] To inhibit migration of the implant **304** out of the LAA **502**, the implant **304** can have barbs or anchors **195** that face proximally as described above. The anchors **195** can engage with adjacent tissue to retain the implant **304** in its implanted position and can limit relative movement between the tissue and the implant **304**. Further, after the implant **304** is deployed, various techniques can be performed to ensure that the implant **304** is properly located in the LAA **502**. For example, the left atrium or LAA may change shape or expand after the implant **304** is deployed. The orifice of the LAA **502** can be sutured while the implant **304** is within the LAA **502** to further fix the implant **304** into the LAA **502**.

[**0274**] It will be appreciated that the delivery systems for the implant **304** described above can be used in combination with conventional instruments used in open surgical procedures or other procedures performed through the chest of a patient and any procedures that are being performed as an adjunct with the delivery of the implant **304** to the LAA. For example, when the implant is to be delivered through the chest, one embodiment of the invention includes a delivery sheath or catheter as described above, an implant sized and configured to prevent passage of embolic material from the left atrial appendage, and means or instruments for providing surgical access through the chest of the patient or for performing surgical procedures on the heart, e.g., retractors, rib spreaders, forceps, scissors, shears, rongeurs, clip appliers, staplers, sutures, needle holders, bulldogs, clamps, elevators, cauterizing instruments or substances, electrosurgical pens, suction apparatus, approximators, and/or the like. When the implant is to be delivered through an outer wall of the left atrium, another embodiment of the invention includes a delivery sheath or catheter as described above, an implant sized and configured to prevent passage of embolic material from the left atrial appendage, and means or instruments for providing access through the left atrium wall, e.g., trocars, port instruments, and the like. When the implant is to be delivered as an adjunct to another surgical procedure, another embodiment of the invention includes a delivery sheath or catheter as described above, an implant sized and configured to prevent passage of embolic material from the left atrial appendage, and means for performing surgical heart procedures, e.g., conventional surgical instruments (such as those described herein) for accessing the heart and performing surgical procedures on the heart. Thus, conventional surgical instruments can be used in conjunction with the delivery of the implant, e.g., when the implant is delivered through the atrial wall of the heart, through the wall of LAA, etc.

[**0275**] Optionally, various procedures and instruments can be used in conjunction with the delivery of the implant, especially if the implant is delivered as an adjunct to an open surgical procedure or other surgical heart procedure. For example, one or more verres needles, trocars, cannulas, insufflators, laparoscopes, light sources, video monitors, forceps, scissors, clip appliers, sutures, needle holders, clamps, retractors, elevators, morcellators, cauterizing instruments or substances, electrosurgical cutting or grasping instruments, suction apparatuses, approximators, and/or the like can be used before, during, and/or after the surgical procedures and/or delivery of the implant in the LAA.

[**0276**] Throughout this application the terms implant and occlusion device have been used. One of ordinary skill in the art will appreciate that all of the disclosures herein are applicable to a wide variety of structures that include both implants that may or may not also be occlusion devices. Routine experimentation will demonstrate those limited circumstances under which certain disclosures and combinations thereof are not beneficial.

[**0277**] Further details regarding left atrial appendages devices and related methods are disclosed in U.S. Pat. No. 6,152,144, titled "Method and Device for Left Atrial Appendage Occlusion," filed Nov. 6, 1998, U.S. patent application Ser. No. 09/435,562, filed Nov. 8, 1999, U.S. patent application Ser. No. 10/033,371, titled "Adjustable Left Atrial Appendage Occlusion Device," filed Oct. 19, 2001. The entirety of each of these is hereby incorporated by reference in their entirety.

[**0278**] While particular forms of the invention have been described, it will be apparent that various modifications can be made without departing from the spirit and scope of the invention. Accordingly, it is not intended that the invention be limited, except as by the appended claims.

What is claimed is:

1. A method of delivering a device to a left atrial appendage comprising:

forming an opening in a chest of a patient suitable for surgical heart procedures;

advancing an implantable device through the opening and into a left atrium; and

passing the implantable device through the left atrium and positioning the implantable device at the left atrial appendage.

2. The method of claim 1, wherein the opening in the chest is formed by a sternotomy incision.

3. The method of claim 1, wherein the implantable device is positioned at the left atrial appendage as an adjunct to a surgical heart procedure.

4. The method of claim 3, wherein the surgical heart procedure comprises treatment of a valve of the heart.

5. The method of claim 4, wherein the treatment comprises one of repairing or replacing the valve of the heart.

6. The method of claim 1, wherein the implantable device is manually implanted by holding the device in a person's hand, passing the device and a portion of the hand into the left atrium, and manually pushing the device into the left atrial appendage.

7. The method of claim 1, wherein the advancing of the device comprises:

passing a delivery sheath through the opening in the chest of a patient;

positioning a distal end of the delivery sheath proximate to the left atrial appendage;

advancing distally the device through the delivery sheath; and

delivering the device out of the distal end and into the left atrial appendage.

8. The method of claim 7, wherein the device is delivered out of the distal end of the delivery sheath when the distal end extends into the left atrial appendage.

9. The method of claim 7, further comprising distally advancing a push rod through the delivery sheath such that a distal end of the push rod pushes the device through the delivery sheath and out of the distal end of the delivery sheath.

10. A method of delivering a device to a left atrial appendage comprising:

forming an aperture in the outer wall of a left atrium of a heart;

advancing a delivery sheath through the aperture and into the left atrium;

positioning a distal end of the delivery sheath proximate to an orifice of the left atrial appendage while the delivery sheath extends through the left atrium and the aperture;

advancing a device through the delivery sheath and out of the distal end; and

implanting the device at the left atrial appendage.

11. The method of claim 10, wherein the device is delivered out of the distal end when the delivery sheath passes through the orifice and the distal end is positioned within the left atrial appendage.

12. The method of claim 10, further comprising:

positioning a transition catheter within the delivery sheath, the transition catheter extends distally from the distal end of the delivery sheath and forms a blunt tip;

advancing the delivery sheath and transition catheter and into the left atrium until the distal end of the delivery sheath is proximate to an orifice of a left atrial appendage; and

removing the transition catheter from the delivery sheath and then distally advancing the device through the delivery sheath.

13. The method of claim 10, wherein the delivery sheath has a curved distal portion shaped to direct the distal end of the delivery sheath towards the left atrial appendage.

14. A method of delivering a device to a left atrial appendage comprising:

providing a delivery sheath having a lumen and a distal end;

providing a transition catheter having a tip configured to reduce injury to a patient;

advancing the delivery sheath and transition catheter along the right atrium and through a transseptal hole and into the left atrium until a distal end of the delivery sheath is proximate to an orifice of a left atrial appendage;

removing the transition catheter from the delivery sheath;

distally advancing a device through the delivery sheath; and

implanting the device at the left atrial appendage while the distal end of the delivery sheath is disposed within the left atrial appendage.

15. The method of claim 14, wherein the device is distally advanced through the delivery sheath by distally moving a delivery catheter through the delivery sheath after the transition catheter has been removed from the delivery sheath.

16. The method of claim 15, wherein the device is implanted by operating the delivery catheter and expanding the device.

17. A method of delivering a device to a left atrial appendage comprising:

providing a left atrium access path through a pulmonary vein to a left atrial appendage;

advancing a delivery sheath along the left atrium access path until the delivery sheath is located proximate to the left atrial appendage;

advancing an implant through the delivery sheath until the implant passes out of a distal end of the delivery sheath; and

implanting the device at the left atrial appendage.

18. The method of claim 17, wherein the device is an expandable implant configured to prevent passage of embolic material from the left atrial appendage.

19. The method of claim 17, wherein the delivery sheath has a curved distal portion shaped to direct the distal end of the delivery sheath towards the left atrial appendage.

20. A system for delivering a device to the left atrial appendage, the system comprising:

an implant sized and configured to prevent passage of embolic material from a left atrial appendage;

a delivery sheath defining a lumen and a distal end;

a transition catheter having an atraumatic tip and configured to slide through the lumen of the delivery sheath, the transition catheter being adapted to extend from the distal end of the delivery sheath when the distal end is proximate to the left atrial appendage; and

a delivery catheter removably coupled to the implant, the delivery catheter and implant being configured to pass through the lumen of the delivery sheath to the left atrial appendage.

21. The system of claim 20, wherein the atraumatic tip is a soft blunt tip.

22. The system of claim 20, wherein the delivery sheath has a curved distal portion shaped to direct the distal end of the delivery sheath towards the left atrial appendage.

23. A system for delivering a device to the left atrial appendage, the system comprising:

an implant sized and configured to prevent passage of embolic material from a left atrial appendage; and

a delivery device configured to carry the implant to the left atrial appendage, the delivery device having a length configured to access the left atrial appendage through an opening in a chest of a patient, the delivery device having a length of about 80 cm or less.

24. The system of claim 23, wherein the delivery device is a delivery sheath having a lumen configured to receive the implant therein.

25. The system of claim 24, further comprising a delivery catheter configured to releasably engage the implant.

26. The system of claim 23, wherein the delivery sheath has a length that is greater than about 10 cm.

27. The system of claim 23, wherein the delivery device comprises a delivery catheter configured to releasably engage the implant.

28. The system of claim 27, wherein the delivery device further comprises a delivery sheath, the delivery catheter has length that is about 10 cm to about 30 cm greater than the length of the delivery sheath.

29. The system of claim 23, wherein the delivery device has a length of about 30 cm or less.

30. The system of claim 23, wherein the implant is configured to be positioned within the left atrial appendage.

31. The system of claim 23, wherein the implant is configured to be expanded within the left atrial appendage.

32. A system for delivering a device into the left atrial appendage, the system comprising:

an implant sized and configured to prevent passage of embolic material from a left atrial appendage;

a delivery device configured to carry the implant to the left atrial appendage, the delivery device having a length configured to access the left atrial appendage through an opening in a chest of a patient; and

means for providing surgical access to the left atrial appendage through the chest of the patient.

33. The system of claim 32, wherein the means for providing surgical access comprises at least one selected from the group consisting of a retractor, rib spreader, clamp, a trocar and a laparoscopic instrument.

34. The system of claim 32, wherein the means for providing surgical access to the left atrial appendage comprises surgical retractors.

35. The system of claim 32, wherein the means for providing surgical access to the left atrial appendage comprises a trocar.

36. The system of claim 32, wherein the means for providing surgical access to the left atrial appendage comprises means for providing access through the left atrium wall.

37. A system for delivering a device into the left atrial appendage of a patient, the system comprising:

an implant sized and configured to prevent passage of embolic material from a left atrial appendage;

a delivery device configured to carry the implant to the left atrial appendage, the delivery device having a length configured to access the left atrial appendage through an opening in a chest of a patient; and

means for performing a surgical heart procedure in the heart of the patient.

38. The system of claim 37, wherein the means for performing a surgical heart procedure comprises at least one selected from the group consisting of a retractor, rib spreader, forceps, and clamp.

39. The system of claim 37, wherein means for performing a surgical heart procedure comprises at least one selected from the group consisting of cauterizing instruments or substances, electrosurgical pen, suction apparatus, approximators, rongeur, clip applier, stapler, suture, needle holder, and bulldogs.

40. The system of claim 37, wherein the means for performing a surgical heart procedure comprises at least one selected from the group consisting of a sizing ring, balloon, caliper, and gage.

41. A system for delivering a device to the left atrial appendage of a patient, the system comprising:

an implant sized and configured to prevent passage of embolic material from a left atrial appendage; and

a delivery device configured to carry the implant to the left atrial appendage, the delivery device sized and configured to access the left atrial appendage through a pulmonary vein, the delivery device having a length of about 50 cm or less.

42. The system of claim 41, wherein the delivery sheath has a length in the range of about 15 cm to about 50 cm.

43. The system of claim 41, further comprising a delivery catheter, wherein the delivery catheter has length that is about 10 cm to about 30 cm greater than the length of the delivery device.

44. The system of claim 41, further comprising means for accessing the pulmonary vein through the chest of the patient.

* * * * *