July 4, 1939. B. F. FITCH 2,164,317

DEMOUNTABLE FREIGHT CONTAINER

Filed Feb. 3, 1936 4 Sheets-Sheet 1

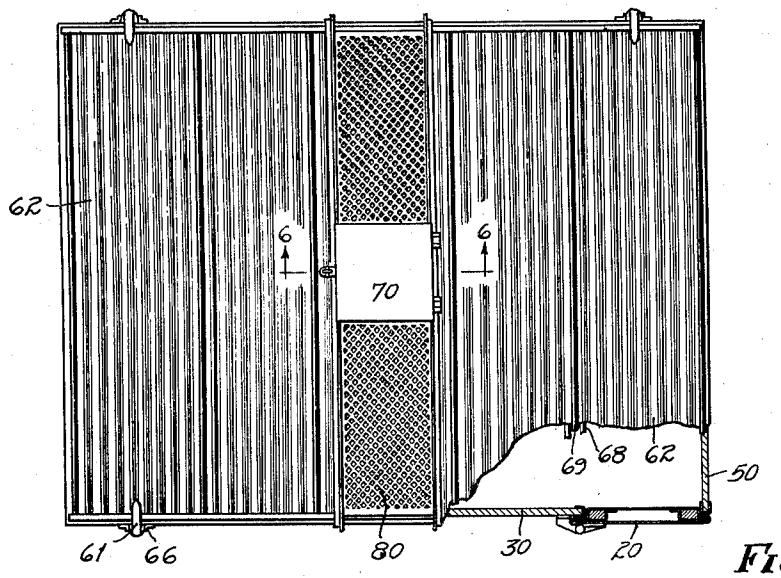

Fig. 2

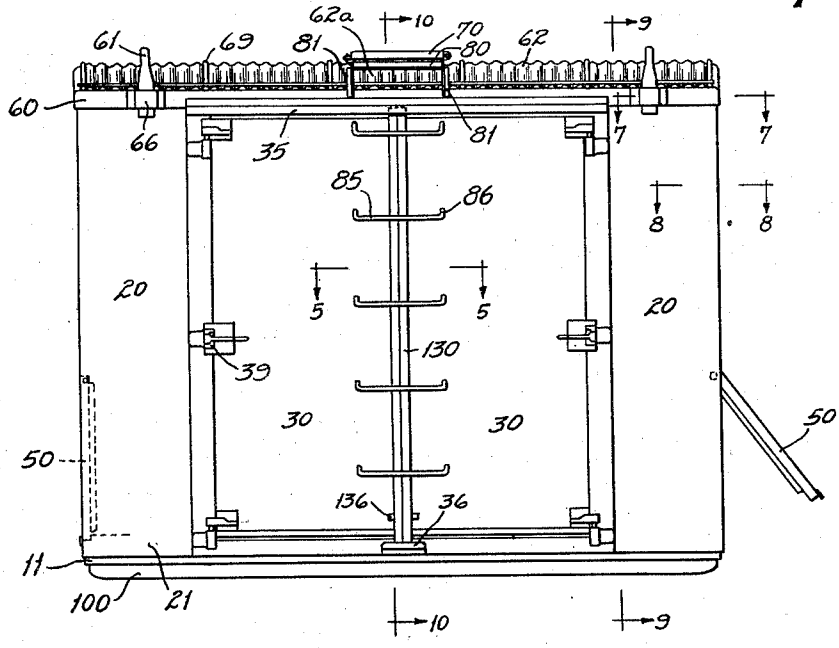

Fig. 1

INVENTOR.
Benjamin F. Fitch,
BY
Dalis, Golrick & Fearn
ATTORNEYS.

July 4, 1939. B. F. FITCH 2,164,317

DEMOUNTABLE FREIGHT CONTAINER

Filed Feb. 3, 1936 4 Sheets-Sheet 2

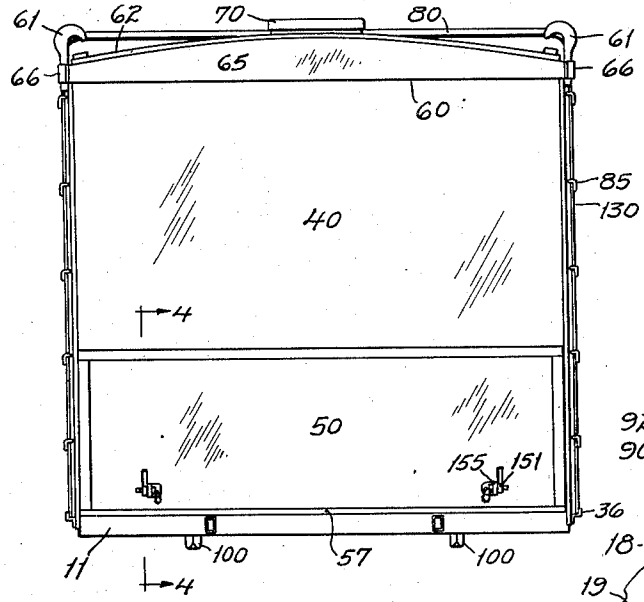

Fig. 3

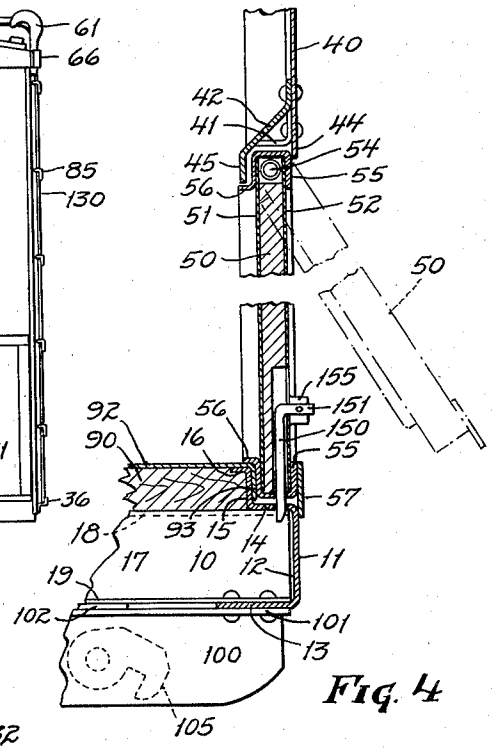

Fig. 4

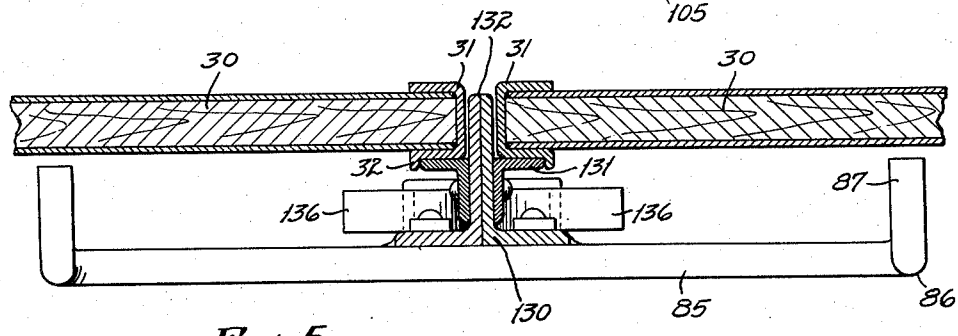

Fig. 5

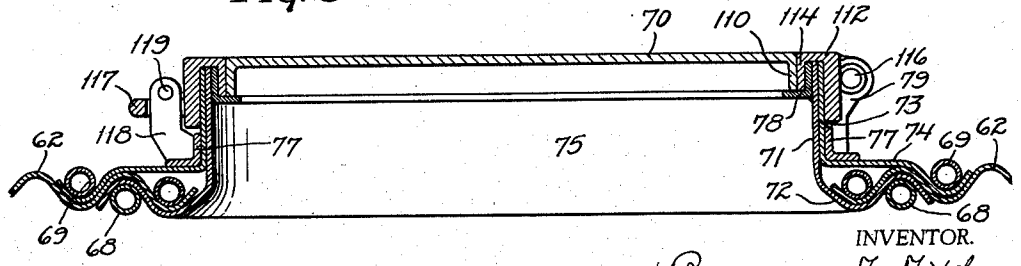

Fig. 6

INVENTOR.
Benjamin F. Fitch,
BY
Dale, Gobrick & Fearn,
ATTORNEYS.

July 4, 1939. B. F. FITCH 2,164,317

DEMOUNTABLE FREIGHT CONTAINER

Filed Feb. 3, 1936 4 Sheets-Sheet 3

Fig. 7

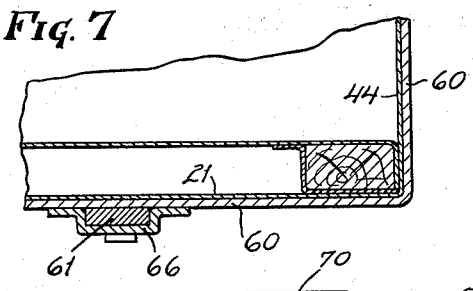

Fig. 8

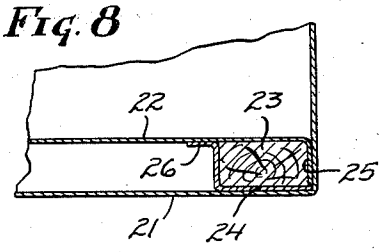

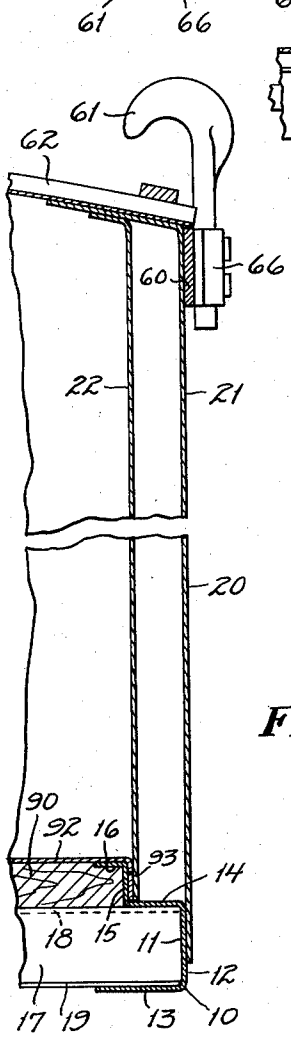

Fig. 9

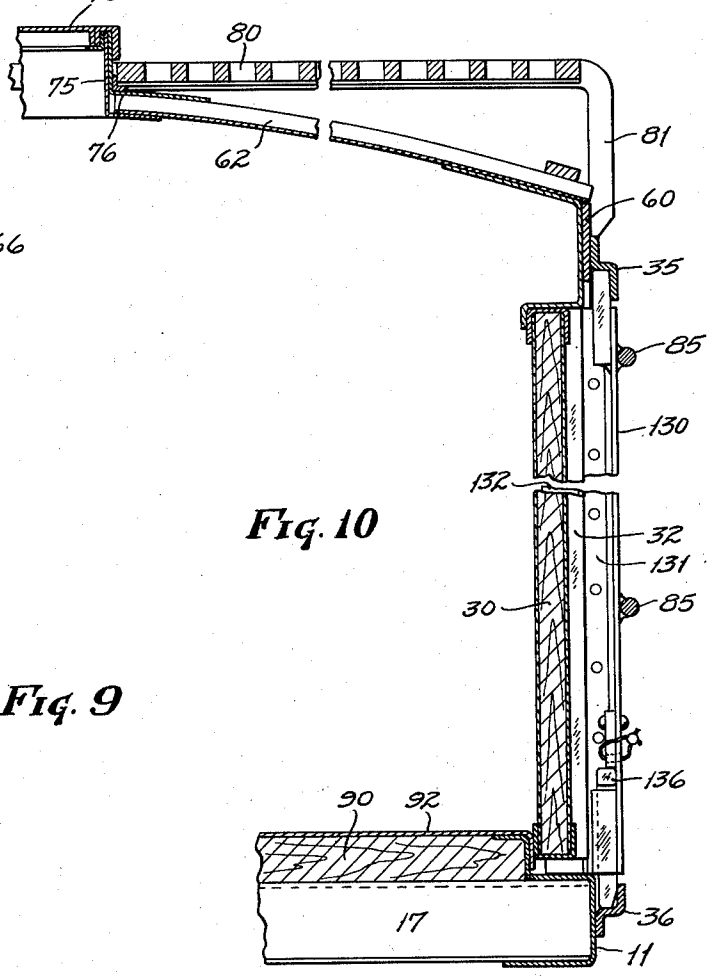

Fig. 10

INVENTOR.

Benjamin F. Fitch,

BY

Bair, Golrick & Tear,

ATTORNEYS.

July 4, 1939. B. F. FITCH 2,164,317

DEMOUNTABLE FREIGHT CONTAINER

Filed Feb. 3, 1936 4 Sheets-Sheet 4

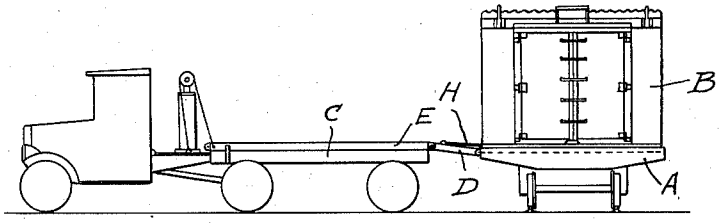

Fig. 11

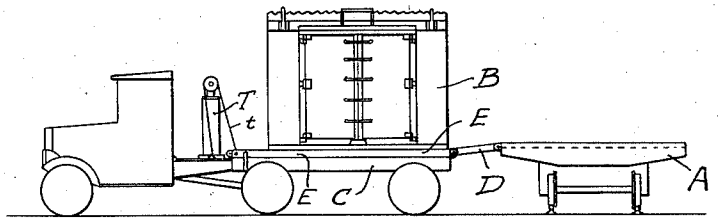

Fig. 12

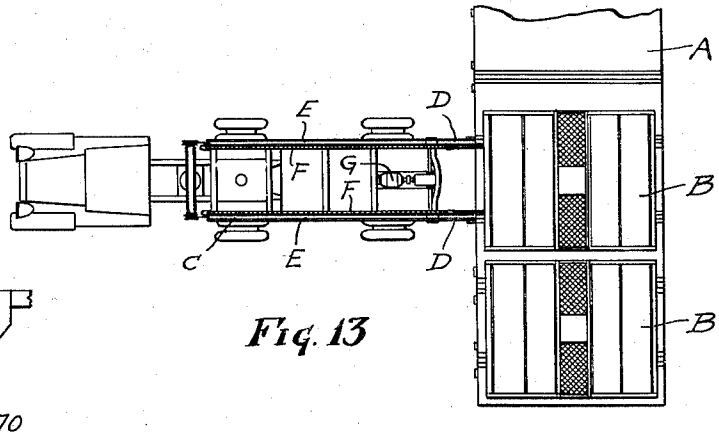

Fig. 13

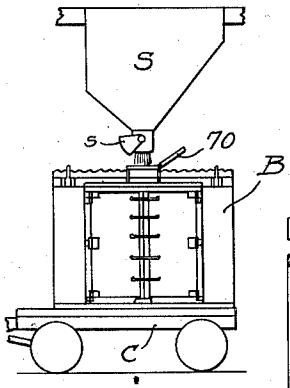

Fig. 15

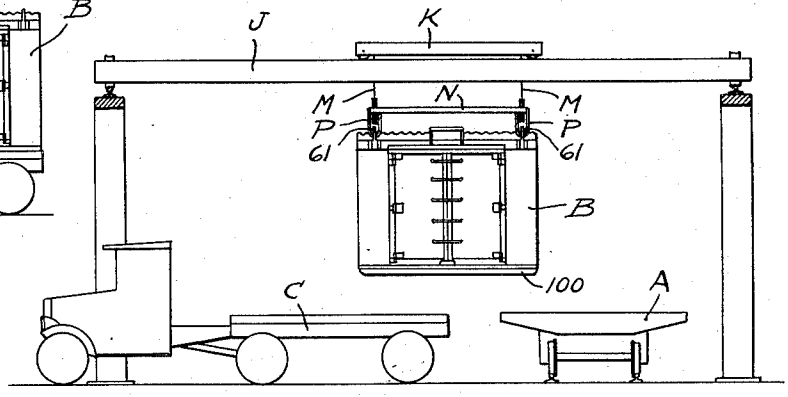

Fig. 14

INVENTOR.

Benjamin F. Fitch,

BY

Davis, Golrick & Tearn,

ATTORNEYS.

Patented July 4, 1939

2,164,317

UNITED STATES PATENT OFFICE

2,164,317

DEMOUNTABLE FREIGHT CONTAINER

Benjamin F. Fitch, Greenwich, Conn., assignor to Motor Terminals, Inc., Cleveland, Ohio, a corporation of Ohio

Application February 3, 1936, Serial No. 62,096

8 Claims. (Cl. 220—1.5)

This invention relates to a demountable truck body adapted to be carried by a highway truck and moved intact with its load onto a railway flat car for transportation in conjunction with other bodies on the car, this body being usually retransferred at the rail destination to a highway truck for delivery. The general object of the invention is to provide a strong and at the same time a comparatively light body adapted for carrying a variety of merchandise and having provisions for loading and unloading in the most efficient manner.

My demountable body has a doorway for nearly the height of the body in at least one wall, and a depending tail gate adapted to form a portion of another wall, and a closable intake opening in the roof. This enables loading through the doorway or from a hopper above the roof, and discharge through the doorway or via the tail gate, according to the nature of the material carried. Preferably there are comparatively large double doors on each side of the container, tail gates on the other two sides, and preferably the body is provided with skid rails on the bottom and load-attaching devices at the eaves, enabling ready transfer between railway car and truck by surface interchange or by trolley hoist lifting, moving and depositing. I therefore characterize this body as an "all-purpose demountable container truck body".

The invention comprises a body having the various features above outlined cooperating to produce the universal effect stated. It also includes the floor frame, side wall and roof constructions herein illustrated and described. It also embodies the peculiar and very efficient construction of combined door locking post and ladder, enabling access to the roof of the container. The peculiarly arranged tail gate, which may form a tight portion of one of the walls of the body, is also an important feature. These various characteristics are illustrated in the drawings hereof, and hereinafter more fully explained, and the essential novel features are summarized in the claims.

In the drawings, Fig. 1 is a side elevation of my demountable body; Fig. 2 is a plan of the same partly broken away; Fig. 3 is an elevation of the body; Fig. 4 is a vertical section through the tail gate of the body as indicated on the line 4—4 of Fig. 3, but on a larger scale; Fig. 5 is a detail of the door locking post and ladder of the body, being a horizontal section on the line 5—5 in Fig. 1, but on a much larger scale; Fig. 6 is a sectional elevation of the top door construction of the body as indicated by the line 6—6 on Fig. 2, but on a larger scale; Figs. 7 and 8 are details in enlarged horizontal section as indicated by the lines 7—7 and 8—8 on Fig. 1; Figs. 9 and 10 are substantially vertical sections through a side wall of the body as indicated by the lines 9—9 and 10—10 on Fig. 1; Fig. 11 is an elevation showing the body on the railway car; Fig. 12 is a similar view showing the body on the trailer; Fig. 13 is a plan of the apparatus shown in Fig. 11; Fig. 14 is an elevation illustrative of a crane mechanism transferring a demountable body between the trailer and car; Fig. 15 is an elevation illustrating the body on the trailer receiving a load from an overhead hopper.

Referring briefly to the general characteristics of the body, as shown in Figs. 1 to 10, such body comprises a floor frame 10 (carrying at its top a floor 90, 92, and at its bottom skid rails 100, as hereinafter described), side walls 20 between which are double side doors 30, end walls 40 for something more than half of the upper region of the ends, tail gates 50 below the end walls 40 and completing the end portion, a roof frame 60 embracing the side walls 20 and end walls 40 and carrying hoist attaching hooks 61 and a roof 62, a top door 70 normally covering an entrance passageway to the roof, and suitable platforms 80 on the roof aligned on opposite sides of the central top opening and at their outer ends registering with ladder bars 85 on locking posts 130 securing the side doors.

I will now describe specifically each of the above outlined parts.

The floor frame 10, as shown particularly in cross-section in Figs. 4, 9 and 10, comprises an open rectangular frame made by four inwardly facing angle bars of peculiar construction secured together at their ends, and intermediate channel shaped floor beams. The four boundary channel beams or sills 11 each comprises a main vertical web 12, a bottom flange 13, an inward offset 14 at the top of the vertical web, then a short vertical web portion 15, and finally a top flange 16. At their ends these beams may abut each other on a miter joint or otherwise, or may overlap as by reduction in the height of the webs of one beam corresponding to the thickness of the flanges, to enable it to pass into the recess of the other beam, or splice plates may be employed. The parts may be secured together by riveting but preferably by welding.

The floor beams designated 17 are ordinary channel-shaped members having top and bottom flanges 18 and 19. They extend into the recess of opposite sills 11 between the flanges 13 and 14 thereof, and are secured thereto by welding or, if desired, by angle clips.

The floor proper comprises wooden planking 90, resting on the flanges 18 of the channel beams 17, and cut down at the marginal edges to extend beneath the flanges 16 of the side and end sills. A metal top sheet 92 rests on the planking and extends over the sill flanges 16 and

then is bent down on the outer side of the web portions 15 of the sills, as shown at 93.

The skid rails are a pair of hollow U-shaped members 100 having outward top flanges 101 which are secured to the bottom flanges 13 of the corresponding sills adjacent the ends of the skid rail. Intermediately the flanges of these skid rails lie directly beneath flanges of floor beams 17 and are suitably secured thereto, as by rivets passing through distance plates 102.

The skid rails are spaced inward from the side edges of the body about one-fourth way across the floor frame to properly distribute the load on the skid rails and also to place them in position to cooperate with desirably spaced supporting channels on a highway truck. The floor beams 17 of the floor frame are spaced throughout the frame in such manner that some of them come directly over the skid rails, while others stand between those over the skid rails, and still others are comparatively close to the side sills, so that the floor planking is effectively supported throughout.

It will be seen that the construction described is comparatively simple and light and at the same time is very strong. The wooden planking gives the desired elasticity to the floor but is fully protected on its top surface by the steel floor plate, and at its edges by the sill members.

The side walls 20, as shown in cross-section in Figs. 2, 7 and 8, are composed of outer sheets 21, inner sheets 22, vertical internal wooden posts 23 and internal angle beams 24 adjacent said posts. There are two of these posts for each side wall and each post is completely enclosed by the angle beam 24 and the internal sheet 22 with an outwardly flanged end portion thereof designated 25. The angle beams have outward flanges 26 abutting these inner sheets.

The side wall construction seats in the recess provided by the portions 14 and 15 of the sill members 11. The inner sheet 22 lies against the downturned edge 93 of the floor sheet and is secured through it to the web portion 15 of the sill. The outer sheet 21 extends down along the outer face of the main web 12 of the sill and is secured thereto, as indicated particularly in Fig. 9. This makes a very effective tying of the side walls to the floor frame.

To form the end walls 40, I extend the end of the side sheets around the corner or weld to them cross-sheets extending from one side wall to the other. These end sheets are braced at their lower edges by flanged structural members to form a downwardly facing rabbet, about to be described.

At the lower edge of the sheet 40 is a horizontal angle bar 41 with its horizontal flange facing inwardly and its vertical flange secured to the sheet 40 a short distance above the lower edge of such sheet. Behind this angle bar is a Z-bar 42, the upper flange of which abuts and is secured to the inner face of the sheet 40, while an inclined web extends across the edge of the horizontal flange of the angle bar. This provides a downwardly facing transverse recess bounded by the projecting edge 44 of the sheet 40, and the depending flange 45 of the Z-bar, both of which projecting portions cooperate with the tail gate whose pivoted upper edge occupies the recess, as hereinafter described.

Adjacent their upper edges the outer side sheets 21 and the end sheets 40 are embraced by the roof frame 60. This frame is an open rectangular member comprising side strips 64 with parallel top and bottom edges and end strips 65 with a horizontal bottom edge and an upwardly convex top edge as shown in Fig. 3. This roof frame is a strong steel member welded or otherwise effectively secured to the side and end walls.

The roof frame 60, as heretofore stated, carries the lift hooks 61. These have top hook portions facing inwardly as shown in Fig. 3, and downwardly extending non-circular shanks embraced by stirrups 66, secured to the roof frame, the shanks of the hooks having heads below these stirrups. Thus the lifting stresses are carried from the hooks directly to the U-frame 60, and thence via the side sheets to the floor frame. The end walls 40 and the members 65 of the roof frame effectively resist any inward or outward stress on the hooks in case the lifting cables are not strictly vertical.

The roof proper is made by transverse arched bars 68 secured at their ends to the side members of the roof frame, corrugated sheets 62 resting on the bars, and other bars 69 overlying the roof sheets and located where one sheet overlaps another and secured at their ends to the side members of the roof frame. These under and upper cross-bars thus effectively support the roof sheets and tie down the junctions where they overlap and also form cross braces between the side members of the roof frame.

Referring now to Figs. 2, 6 and 9, showing the construction at the top loading opening, it will be seen that this opening is surrounded by a hollow, rectangular frame, providing vertical walls about the opening and substantially horizontal integral extensions of these walls engaging the adjacent edges of the corresponding roof sheets. Each wall is made of two sheets in face engagement at their vertical portions, while the extensions are separated to receive the corresponding roof sheets between them.

As appears in Fig. 6, the inner sheet 71 has an outer extension 72 corrugated to lie beneath the sheet 62, while the outer sheet 73 has its extension 74 first horizontal and then bent downwardly and upwardly to engage the top of the roof sheet 62. The inside and outside roof bars 68 and 69 together hold the two sheets to the embraced roof sheet.

The side walls of the top entrance frame are composed of sheets 75 and 76 in contact on their vertical faces, while their separated lateral portions extend above and below the inner portions of the special roof sheets 62*a* to which they are secured, as indicated in Fig. 9. These longitudinal sheets 75 and 76 are secured at their ends to the ends of the cross sheets 71 and 72. The hollow frame is braced by a surrounding angle bar 77 and an internal angle bar 78, which also provides a rabbet to receive a flange of the top door.

The entire top-opening frame, composed of the sheets 71, 73, the sheets 75, 76, and the angle bars 77, 78, is preferably welded together into one rigid unitary structure which, when mounted in place, is supported by the cross beams of the roof and is tightly secured to the different roof sheets.

The trap door 70 is preferably made of a horizontal sheet member having downward flanges 110, and a comparatively heavy external border member 112 of downward facing trough form which, at its inner flange 114, abuts and is secured to the flange 110. The outer flange of the member 112 carries ears for a hinge pintle 116 occupying ears 79 on the stationary frame. This effectively hinges the door to the frame and enables a very tight joint when the door is closed as the boundary member 112 snugly extends over the upper ends of the frame members 71, 72, 75 and

76, while the door flanges 110 and 114 abut the inward flange of the frame member 78. At its edge opposite the hinge the trap door has a hasp 117 which extends over an upstanding bracket 118 carried by the frame angle bar 77 and adapted to receive a padlock through an opening 119 above the hasp when the door is closed, as shown in Fig. 6.

Figs. 1, 2 and 3 show at 80 a pair of horizontal platforms extending transversely from the longitudinal faces of the top wall to the side of the body. The inner end of the platform is secured to the outward extension of the center frame sheet 76, while the outer end is supported by brackets 81 secured to the roof frame 60. The top surface of the platforms is suitably roughened, as indicated in Fig. 2, to provide a firm footing for an attendant standing therein, while superintending the loading through the top opening.

The locking posts 130, which secure the side doors 30, are constructed substantially as shown, described and claimed in my Patent No. 2,028,771, to be issued January 28, 1936. As there set out, and as shown in Fig. 5, this post comprises a pair of vertical angle bars back to back and a pair of smaller angle bars 131 secured to the inwardly extending flanges of the main bars. The doors 30 have at their free edges protecting channel bars 31 with outward extreme flanges 32.

When the locking post is in place, its central web 132 lies between the doors, and the flanges 131 occupy the outwardly facing recess provided by the flanges on the door boundary members. The upper end of the post now extends behind the downward flange of a top Z-bar 35 (secured to the roof frame 60) while the lower end lies in a keeper 36 (secured to the floor frame) to which the post may be locked by sliding bolts 136.

As pointed out in my patent above mentioned, the locking post effectively holds the doors closed and prevents leakage between them. But it will be also observed that the doors and the top and bottom retainers hold the post against shifting in any direction. I am accordingly able to utilize this post as the upright of a ladder by which one may reach the platform 80. Thus, in Figs. 1 and 5 I have shown steel rods 85 extending horizontally across the post and welded to it in the mid-region of the rods. The rods preferably turn upwardly at their ends 86 and then extend backward, as shown at 87 in Fig. 5. This formation 86, 87 provides a convenient end flange, preventing the attendant's foot slipping off of the rung.

It will be observed that the ladder, allowing ready access to the top, is always available when the side doors are locked, but then only. It thus acts as a tell-tale, automatically informing the attendant that the doors are locked shut before he mounts the roof for loading through the top.

I have heretofore referred to the tail gates 50 forming the lower portion of the end walls of the body. These gates are composed of two sheets of metal 51 and 52, Fig. 4, secured adjacent their edges within a boundary channel 55 which extends about the entire edge of the gate. The upper end of the gate extends in a downwardly facing horizontal recess at the lower edge of the upper end wall 40 and is there pivoted on a horizontal axis, as by studs 54 carried by the gate and occupying keepers in the adjacent portion of the body side wall 20.

When the tail gate is closed, as shown in full lines in Fig. 4, flanges 56 extending from the edge of the boundary channel 55 make a close engagement with the end-wall-flange 45, the floor sheet 92 and the ends of the lower portion of the side wall. A batten strip 57 carried by the gate now engages the outer face of the floor sill. The door is normally locked to this end sill by gravity bolts 150 which lie within the gate and have bent ends 151 passing through slots in the outer sheet 52 of the gate. These outwardly projecting ends may register with brackets 155 secured to the outer face of the gate for the insertion through them of a padlock or seal, as in Fig. 3.

It will be seen from the description given that while the sides of the body are principally doors, and there are tail gate openings in the ends and the filling opening in the top, still the entire body is so arranged as to be very stiff and strong. The formation of the floor frame and of the roof make these units well braced, while the connection between the floor frame and roof by means of double thickness side walls with their internal posts braced by the end wall sheets, makes a stiff and at the same time light connecting wall between the base and roof. The mounting of the double side walls in the rabbet provided by the floor sills forms an effective connection at this region, while leaving the outer surface of the body substantially flush. The double walled tail gates are individually well braced and when in normal locked position make such tight connection with the floor frame and side walls as to form a further transverse brace.

By reason of the skid rails and the lift hooks on this body, it may be handled equally well by a surface interchange between a highway truck and railway flat car, or by a hoist interchange. These operations are illustrated in Figs. 11 to 15, inclusive, thus: Fig. 11 shows a railway car A, the body B resting thereon, and a highway truck C coupled to the car by end bridges D over which the body may be shifted. Fig. 12 illustrates the body after being mounted on the truck.

The transfer of the body from the railway car to the truck or vice versa may be readily effected by suitably driven longitudinal endless chains on the truck which are temporarily coupled to the body. Such construction is set out fully, for instance, in my prior application, No. 39,725, filed September 9, 1935. It is herein illustrated in Fig. 13, where the truck C carries longitudinal upwardly facing channels E to receive the skid rails 100 of the body, while extending alongside of these channels are other channels F in which are mounted endless chains which extend also along the hinged bridges D at the end of the truck. These chains are adapted to be driven by a suitable motor G on the truck and are temporarily coupled with the body by push-and-pull bars H, Fig. 11. Thus the operation of the motor G may readily transfer the body between the car and truck.

In place of the surface interchange illustrated in Figs. 11, 12 and 13, my body is equally adapted for transfer by trolley hoist, as illustrated in Fig. 14. This view shows a suitable bridge J spanning the car and truck and traveling lengthwise of the car, and a transversely movable crane frame K having depending lift cables M connected to a cradle N having depending loops or shackles P adapted to engage the hooks 61 of the body. This construction enables the body

to be raised from the flat car or truck and moved horizontally while suspended and deposited on the other vehicle.

The body described is well adapted to receive package freight of large or small size, loaded through the comparatively large doorway on one or both sides. It may equally well receive bulk material, such as grain, salt, etc., loaded by gravity through the roof opening, as illustrated in Fig. 15. There the top door **70** is open and the body stands beneath a suitable hopper S having at its bottom a controlling gate *s*. By opening this gate the material may pass directly from the hopper into the container.

It will be noted that the side doors **30** of the container lie at their hinged edges behind the projecting edges of the outer sheet of the side wall, thus making tight connection in those regions. To make the connection tight at the top and bottom edges of these doors, the doors may be provided with cam mechanism adjacent their hinges (illustrated at **39** in Fig. 1, and described and claimed in my application No. 744,213, filed September 15, 1934) to raise them when closed to effect a tight connection at both the top and bottom. The tight junction of the end gates is insured by the border flange **56** engaging the floor, sides and end wall brace, and also by the depending edge of the end wall and the batten strip at the foot of the tail gate. These features insure such a tight engagement of both side doors and tail gates that there is little chance for leakage of any commodity deposited through the top opening.

In case, however, some very fine material is to be carried, it is entirely feasible before loading the same for a man to enter the body through the top opening, which is sufficiently large to enable ready passage, and paste a paper lining across the side doors and tail gates. This will prevent the material sifting out, no matter how fine. When such material is to be discharged, the paper, of course, will be readily broken by the act of opening the tail gate.

When bulk material of any kind is used, this body and the appropriate truck provide for the ready dumping of the body to discharge through one of the tail gate openings. To effect this, I prefer to employ a truck having the channel members E, which support the body, hinged to the truck adjacent the rear end thereof, and liftable at the front ends, as shown, described and claimed in my copending application, No. 60,248, filed January 22, 1936. This is illustrated in Fig. 12, where a hydraulic cylinder is indicated at T mounted on the truck frame and having its piston operating cables *t* connected to the channels E. The hollow skid rails **100** contain within them suitable locking means, as set out in my application No. 32,130, filed July 18, 1935, and indicated herein by the hook **105**, Fig. 4. Such hooks (two for each skid rail) may be operated to project downwardly into engagement with keepers on the flat car or through openings in the channels E of the truck when the body is mounted thereon. This locks the body to such channels so that the body may not shift thereon, and hence the body may be readily dumped by reason of raising the forward ends of the truck channels E.

I claim:

1. A demountable freight container having a floor frame with a rabbeted upper edge, a fixed side wall comprising inner and outer sheets spaced apart, the inner sheet occupying the rabbet and secured to the upright face thereof and the outer sheet extending across the outer face of the sill proper and secured to it.

2. A demountable freight container having a floor frame with side sills of inwardly facing channel form with the upper portion of its web bent inwardly and then upwardly, a side wall comprising inner and outer sheets spaced apart, the inner sheet being secured to the upwardly-extending inwardly-offset portion of the sill and the outer sheet extending across and secured to the outer face of the sill proper.

3. In a freight container, the combination with a floor frame and roof of side walls connecting the same, said side walls being of double thickness comprising an inner and an outer sheet spaced apart, a vertical post between the sheets, one of the sheets being flanged at its end to extend across one of the transverse edges of such post, and a member between the sheets protecting another edge of the post.

4. In a freight container, the combination with a floor frame and roof of side walls connecting the same, said side walls being of double thickness comprising an inner and outer sheet spaced apart, a vertical wooden post between the sheets, the inner sheet being flanged at its end to extend across a transverse edge of such post, and an internal vertical angle bar on the other side and other edge of the post to entirely house the post within the metal construction.

5. A freight container having a floor frame composed of side and end sills of general channel shape, but with the web diverted inwardly and then upwardly and then inwardly to provide a rabbet, a side wall resting in said rabbet channel-shaped floor beams extending within the recess of opposite sills, between the bottom flange and the inward diversion, and planking resting on the upper flanges of the floor beams and protected at their edges by the upward diversion and top flange of the sills.

6. A freight container having a floor frame composed of side and end sills of general channel shape but with the web diverted inwardly and then upwardly, to provide an outwardly facing rabbet, floor beams extending within the recess of opposite sills between the bottom flange and the inward diversion thereof, wooden planking resting on the floor beams, a sheet metal protection sheet extending over the planking and flanged downwardly on the outer face of the vertical wall of the sill which forms the rabbet, and a vertical wall having spaced inner and outer sheets, the inner sheet occupying the rabbet and abutting the flange of the protection sheet, and the outer sheet abutting the sill-web on the opposite side thereof from the ends of the floor beams.

7. A demountable truck body having a floor frame with sills of inwardly facing channel form, which channel is rabbeted at its upper portion by having its web bent inwardly and then upwardly, a vertical member of said truck body seating at its lower end in such rabbet.

8. A demountable truck body having a floor frame with side and end sills of inwardly facing channel form, which channel is rabbeted at its upper portion by having its web bent inwardly and then upwardly, means for closing the sides and ends of the body, all of such means seating in the rabbet.

BENJAMIN F. FITCH.