PCT WORLD INTELLECTUAL PROPERTY ORGANIZATION
International Bureau

INTERNATIONAL APPLICATION PUBLISHED UNDER THE PATENT COOPERATION TREATY (PCT)

(51) International Patent Classification 5 : H05H 1/42 — A1

(11) International Publication Number: WO 92/00658

(43) International Publication Date: 9 January 1992 (09.01.92)

(21) International Application Number: PCT/CA91/00203

(22) International Filing Date: 13 June 1991 (13.06.91)

(30) Priority data:
543,403 — 26 June 1990 (26.06.90) — US

(71) Applicant: THE UNIVERSITY OF BRITISH COLUMBIA [CA/CA]; 2075 Wesbrook Mall, Vancouver, British Columbia V6T 1W5 (CA).

(72) Inventor: ROSS, Douglas, Albert ; #9-11340 No. 1 Road, Richmond, British Columbia V7E 1S5 (CA).

(74) Agent: ROWLEY, C., A.; 4225 Kincaid Street, Burnaby, British Columbia V5G 4P5 (CA).

(81) Designated States: AT (European patent), BE (European patent), CA, CH (European patent), DE (European patent), DK (European patent), ES (European patent), FR (European patent), GB (European patent), GR (European patent), IT (European patent), JP, KR, LU (European patent), NL (European patent), SE (European patent).

Published
With international search report.

(54) Title: PLASMA TORCH

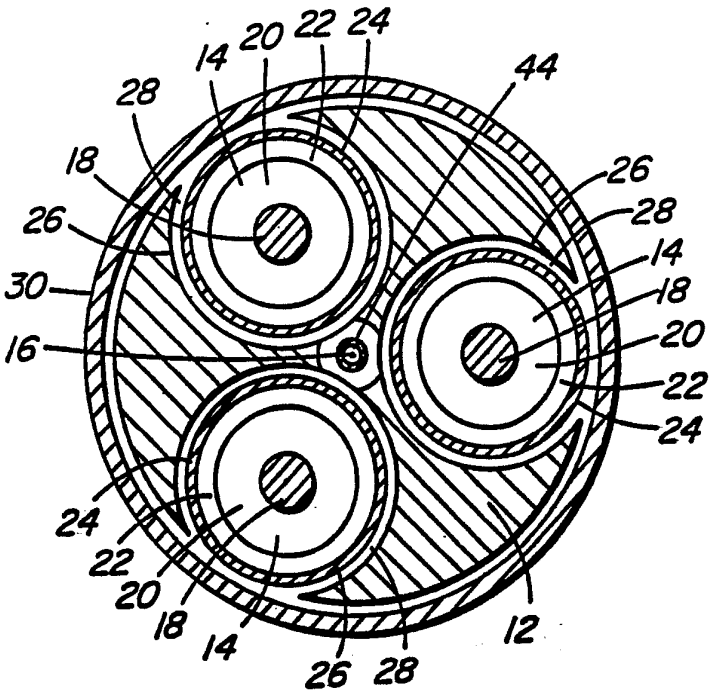

(57) Abstract

A plasma torch (10) incorporates a plurality of arc forming chambers (14) arranged symmetrically about an axis (16) and each containing a first electrode (18). A common electrode (32) cooperates with the electrode (18) in each chamber (14) to form an arc in each chamber (14) and is provided with converging passages (36) leading one from each chamber and converging into a common nozzle passage (40) extending along the axis (16). A reactant feed passage opens into the common nozzle passage (40) coaxial with the nozzle passage in a region of convergence of the converging passages (36) to inject reactants into the centre of the plasma jet formed in the nozzle passage in the direction of movement of the plasma jet through the nozzle passage (40).

FOR THE PURPOSES OF INFORMATION ONLY

Codes used to identify States party to the PCT on the front pages of pamphlets publishing international applications under the PCT.

AT	Austria	**ES**	Spain	**MG**	Madagascar
AU	Australia	**FI**	Finland	**ML**	Mali
BB	Barbados	**FR**	France	**MN**	Mongolia
BE	Belgium	**GA**	Gabon	**MR**	Mauritania
BF	Burkina Faso	**GB**	United Kingdom	**MW**	Malawi
BG	Bulgaria	**GN**	Guinea	**NL**	Netherlands
BJ	Benin	**GR**	Greece	**NO**	Norway
BR	Brazil	**HU**	Hungary	**PL**	Poland
CA	Canada	**IT**	Italy	**RO**	Romania
CF	Central African Republic	**JP**	Japan	**SD**	Sudan
CG	Congo	**KP**	Democratic People's Republic of Korea	**SE**	Sweden
CH	Switzerland			**SN**	Senegal
CI	Côte d'Ivoire	**KR**	Republic of Korea	**SU**	Soviet Union
CM	Cameroon	**LI**	Liechtenstein	**TD**	Chad
CS	Czechoslovakia	**LK**	Sri Lanka	**TG**	Togo
DE	Germany	**LU**	Luxembourg	**US**	United States of America
DK	Denmark	**MC**	Monaco		

PLASMA TORCH

Field of the Invention

The present invention relates to a device for forming a plasma jet. More particularly the present invention relates to a device for forming a plasma jet wherein the reactant is fed axially into the plasma jet forming nozzle.

Background of the Present Invention

In traditional plasma spraying a plasma flame is generated using a torch generally water cooled and having a tungsten cathode and a conical copper anode. Reactant which may be liquid, gaseous, solid or mixtures thereof, is entrained into the hot plasma flame by injection radially to the plasma jet. If the reactant is a powder it is generally carried by and driven into the plasma jet by a carrier gas.

The reactant is injected radially into the plasma flame either within the anode channel (nozzle) or a short distance from the nozzle.

With radial injection of powders the heating and dispersion of the injected reactant is strongly dependent on the trajectory of the reactant into the plasma flame jet. For powders these trajectories are determined by particle size, density, injection velocity and morphology and the range of trajectories is dependent on, among other variables, the size distribution of the powders being injection.

Axial injection of reactants has been used in thermal spray torches, see for example the supersonic velocity flame spray torch of Metco Diamond Jet, however, these spray torches are limited to reactants having low melting points (generally below about 1600°C) and have not been able to spray higher melting point materials.

Brief Description of the Present Invention

It is an object of the present invention to provide an improved plasma jet torch permitting more uniform heat application particularly to particulate reactants.

Broadly the present invention relates to a plasma torch comprising a plurality of arc forming chambers arranged symmetrically about an axis, a first

arc forming electrode in each said arc forming chamber, a common electrode cooperating with said first electrode in each said chamber to form an arc in each chamber, plasma passages through said common electrode, said plasma passages converging in a region of convergence into a single plasma nozzle passage extending along said axis and a reactant feed passage opening co-axially into said plasma nozzle passage at said region of convergence thereby to inject reactant substantially axially into said plasma nozzle and the direction of travel of a plasma jet formed in said plasma nozzle passage.

Preferably each said arc forming chamber will be magnetically shielded from other of said arc forming chambers and preferably each said chamber will be insulated to retain heat and to prevent arcing from said first arc forming electrode to an adjacent wall of its chamber i.e. to better ensure arcing is between each said first electrode and said common electrode in each chamber.

Preferably the longitudinal axis of each of the chambers will be substantially parallel to said axis.

Preferably cooling passages will be provided in said torch to cool said chamber and said passages.

Preferably said first electrode will be moveable relative to said common electrode to adjust the arcing distance (arc length) and more preferably each first electrode will be individually adjustable relative to said common electrode.

Means will also preferably be provided to adjust the electrical power applied to the electrodes and will preferably include means to individually adjust the power to each said first electrode.

Brief Description of the Drawings

Further features, objects and advantages will be evident from the following detailed description of the preferred embodiments of the present invention taken in conjunction with the accompanying drawings in which;

Figure 1 is a partial section through a torch schematically illustrating one of the arc forming chambers.

Figure 2 is a section along the line 2-2 of Figure 1.

Figure 3 is a section along the line 3-3 of Figure 1.

Figure 4 is a schematic illustration of the adjustment of the first electrode (cathodes) to the body of the torch.

Figure 5 is a schematic illustration of a control system that may be used with the present invention.

Description of the Preferred Embodiments

As shown schematically in Figure 1 the plasma torch 10 has a main body portion 12 formed at least in part by thermal and electrical insulating materials and which includes a plurality of different discrete elements connected together preferably by threaded engagements and incorporating a plurality of cooling passages for circulation of coolant (the precise arrangement of the cooling passages, etc does not form part of this invention and can vary significantly and thus while some have been indicated the precise details of the cooling passages has not been described in detail).

The main elements of the present invention are the arc forming chambers 14 which are symmetrically positioned around the longitudinal axis 16 of the torch 10. There will be a plurality of chambers 14 in any torch, preferably three (3), however more chambers may be provided if desired.

Each of the chambers 14 are substantially the same thus only one will be described.

Each of the chambers 14 is provided with a central electrode 18 exiting along the longitudinal axis of the chamber and preferably will combine with the walls of the chamber to define an annular portion of the plasma gas passage 20 connected to the plasma feed inlet 21. The annual portion of the passage 20 surrounding the electrode 18 may be formed as a helical passage so that the plasma gas downstream of the electrode 18 will have a tangential component of velocity and will tend to form a vortex flowing helically along the wall of the chamber 14.

The inner periphery of the chamber 14 is formed by a ceramic insulating liner sleeve 22 to retain heat in the chamber 14 and prevent arcing between the wall of the chamber 14 and the electrode 18. The insulating sleeve 22 is preferably shrunk fit within a cylindrical sleeve 24 which defines the outer

surface of the chamber 14. Preferably the outer sleeve 24 will be made of a material that provides a magnetic shield as such a shield will aid in stabilizing the arc struck in each chamber 14.

Each of the arc forming chambers 14 is contained within its respective substantially cylindrical cavity 26 in the body 12 and spaced relative to the walls of the cavity 26 to provide a circumferentially extending annular channel 28 for coolant (cooling water) circulation to cool each of the chambers 14.

The outer surface of the torch 10 surrounding the chambers 14 is formed by a sleeve 30 that helps to connect the various elements of the body 12 of the torch together.

The outlet end of each of the chambers 14 is formed by a common electrode 32 which preferably is a copper anode. This electrode 32 is provided with a separate cavity 34 forming the axial end of each of the chambers 14. Each of the cavities 34 is axially aligned with the axis of its respective chamber 14 and has a cross sectional area corresponding to the area of the chamber 14, i.e. the cross sectional area of the passage 20 defined by the inner surface of the sleeve 22. A plasma passage 36 leads from each of the cavities 34 preferably at the longitudinal axis of the cavity 34 and converges toward the axis 16 of the torch and intersects with the passages from the other chambers 14 of the plurality of chambers at a region of convergence generally indicated at 38 into a single plasma nozzle passage 40 extending along the axis 16.

The cooling water passages 28 surrounding each of the chambers 14 open into an annular area 42 surrounding the nozzle 40 and the anode 32.

An axial reactant passage 44 is provided through the torch 10 for injection of reactant feed material which may be in the form of a liquid, gas, particulate or solid eg. a wire) into the nozzle 40 and the plasma jet formed therein. This passage 44 opens substantially axially into the passage 40 in the region of convergence (point of intersection) 38 between the plasma passages 36 into the plasma nozzle passage 40 whereby the reactant material is introduced into the plasma jet substantially along the axis of the plasma jet and in the direction of flow of the plasma jet through the nozzle 40.

The cooling water or other cooling fluid passing through the

passages 28 surrounding each of the chambers 14 feeds into the areas 42 and 46 to cool the electrode 32 and the outside of the nozzle 40 and is continuously circulated though the torch in known manner.

As shown in Figure 4 it is preferred to be able to axially adjust simultaneously all of the electrodes 18 within their respective chambers 14. This can be done as schematically illustrated in Figure 4 by a suitable drive mechanism 48 operating on the post 50 connected to the yoke 52 in which each of the electrodes 18 is clamped. The drive 48 may be automatically controlled by signals received via the line 54 to move the three electrodes 18 as indicated by the arrow 56.

Each of the electrodes 18 are mounted to be moved relative the yoke 52. Each is clamped to its respective sleeve 58 the position of which may be axially adjusted relative to the yoke 52 by a suitable drive schematically illustrated at 60. These drives 60 (one for each of the electrodes 18) are controlled by signals transmitted to the drive via line 62 to move its respective electrode 18 as indicated by the arrow 64.

As illustrated in Figure 5, a controller 66 may be used to control the operation of the system.

The controller 66 has a power input 68, a main control 70 to control the total power to the electrodes 18 and 32 and individual control 72A, 72B and 72C each controlling the power to one of the electrodes 18. If desired a slight difference in power consumption in each of the electrodes may be provided or the power may be balanced to be equal and used accommodate slight differences in the operations of the individual chambers 14.

In operation, at start-up the electrodes 18 are moved relatively close to the electrode 32 and power is applied while the plasma gas is introduced by a passage 21 to pass through the plasma gas passages 20 and an arc is struck between each cathode 18 which preferably is a tungsten cathode and the common anode 32 which preferably is a copper anode in each of the chambers 14. The cathodes 18 are then moved axially away from the anode 32 to establish the desired length of electric arc as indicated at 74 in Figure 1 and form the desired plasma exiting through passages 36 into the main passage or jet nozzle 40 to form a plasma jet. Reactant is fed via the passage 44 into the

jet 40 to permit the jet to act on the reactant feed. Generally the plasma torch of the present invention will probably be useable, for example, for plasma spraying, powder synthesis, powder spheriodation, rapid solidification, etc.

It will be apparent that optimum operating parameters for achieving quality coatings or powders will be empirically determined in the conventional manner for the specific reactant composition being used.

While only 3 chambers 14 have been illustrated, it will be apparent that more chambers may be used as desired. However, they should be concentric with the axis 16 and converge uniform into a single nozzle passage 40 co-axial with the inlet from the reactant feed passage 44. If two chambers 14 only are used to form a torch it may be desirable to specifically shape the cross sections of the plasma passages 36 to facilitate convergence. For example the cross section of the passages 36 may be substantially D-shaped and arranged with the straight portions of the D-shapes in substantially parallel facing relationship or C-shaped and arranged with the ends of the C-shapes in opposed facing relationship.

In the above description all of the chambers 14 of the torch are symmetrically arranged about the axis 16 and have their longitudinal axes substantially parallel to the axis 16. It will be apparent that, if desired, the longitudinal axes of the chambers 14 may be oriented at an acute angle to the axis 16 and approach each other more closely at the electrode 34 eg. with their axes spaced about an imaginary cone formed about the axis 16 and intersecting with the axis 16 downstream from the region 38.

Having described the invention, modifications will be evident to those skilled in the art without department from the spirit of the invention as defined in the appended claims.

Claims

1. A plasma torch (10) comprising a plurality of arc forming chambers (14) arranged symmetrically about an axis (16), a first arc forming electrode (18) in each said arc forming chamber (14), a common electrode (32) cooperating with each of said first electrodes (18) in said chambers (14) to form an arc in each of said chambers (14), a plasma passage (36) through said common electrode (32) opening into each of said chambers (14), each of said plasma passages (36) leading from its respective of said chamber (14) and converging toward each other in a region of convergence (38) into a single plasma nozzle passage (40) extending along said axis (16) and a reactant feed passage (44) opening axially into an end of said nozzle passage (40) in said region of convergence (38) thereby to inject reactant substantially axially into said plasma nozzle passage (40) and in the direction of travel of a plasma jet formed in said plasma nozzle passage (40) by plasma passing from chambers (14) through said plasma passages (36) into said plasma nozzle passage (40).

2. A torch as defined in claim 1 further comprising magnetic shielding means (24) encircling each said arc forming chamber (14).

3. A torch as defined in claim 1 further comprising electrical insulating means (22) for each said chamber (14) tending to prevent arcing from said first arc forming electrode (18) to an adjacent wall of its respective said chamber.

4. A torch as defined in claim 1 wherein each of said chambers (14) has its longitudinal axis substantially parallel to said axis (16).

5. A torch as defined in claim 2 wherein each of said chambers (14) has its longitudinal axis substantially parallel to said axis (16).

6. A torch as defined in claim 3 wherein each of said chambers (14) has its longitudinal axis substantially parallel to said axis (16).

7. A torch as defined in claim 3 further comprising cooling passages (28) in said torch to cool said chambers (14) and said passages (36).

8. A torch as defined in claim 7 further comprising means to simultaneously move (56) all of said first arc forming electrodes (18) relative to said common electrode (32).

9. A torch as defined in claim 8 further comprising means to individually adjust (64) each said first arc forming electrode (18) relative to said

common electrode (32).

10. A torch as defined in claim 9 further comprising means to individually adjust (72A, 72B, 72C) the electrical power to each said first arc forming electrode (18).

11. A torch as defined in claim 1 wherein said plurality is three.

12. A torch as defined in claim 2 wherein said plurality is three.

13. A torch as defined in claim 3 wherein said plurality is three.

14. A torch as defined in claim 4 wherein said plurality is three.

15. A torch as defined in claim 5 wherein said plurality is three.

16. A torch as defined in claim 6 wherein said plurality is three.

17. A torch as defined in claim 7 wherein said plurality is three.

18. A torch as defined in claim 8 wherein said plurality is three.

19. A torch as defined in claim 9 wherein said plurality is three.

20. A torch as defined in claim 10 wherein said plurality is three.

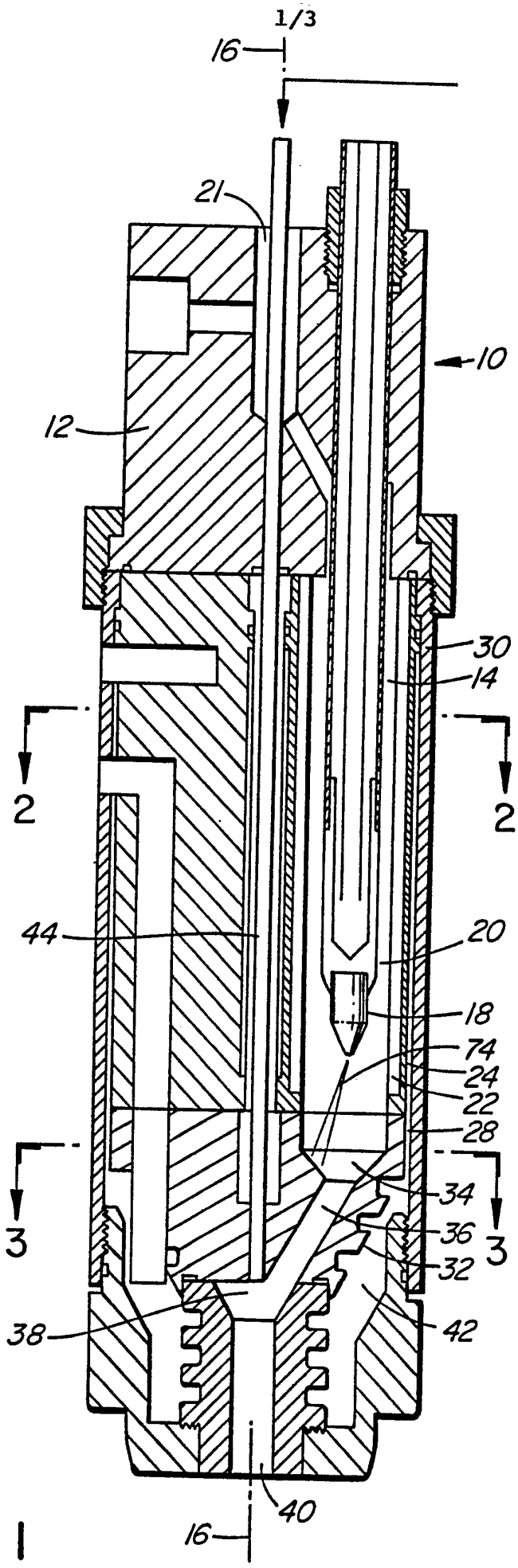

FIG. 1

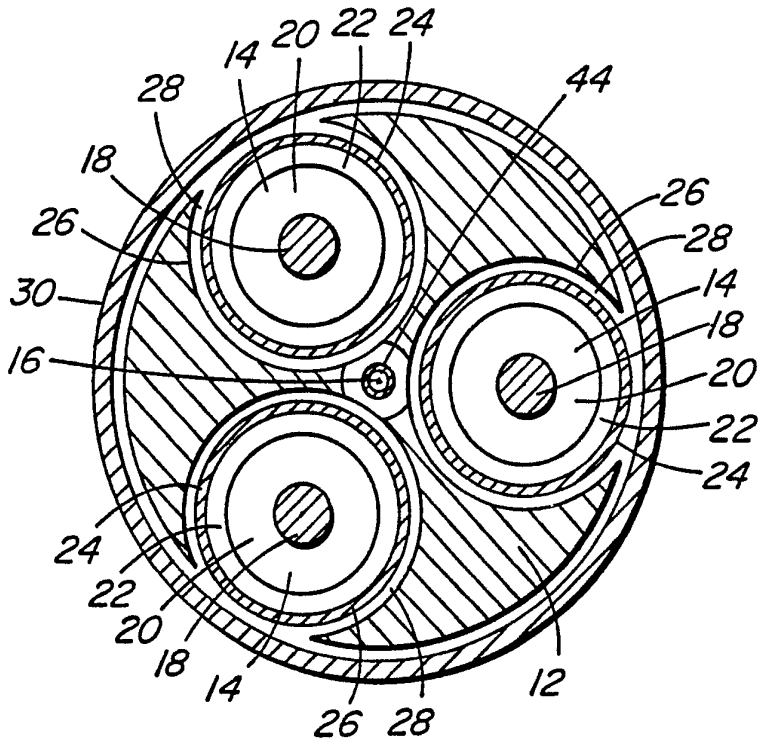
14
20
22
24
28
44
18
26
26
28
30
14
16
18
20
22
24
24
22
20
18
14
26
28
12

FIG. 2

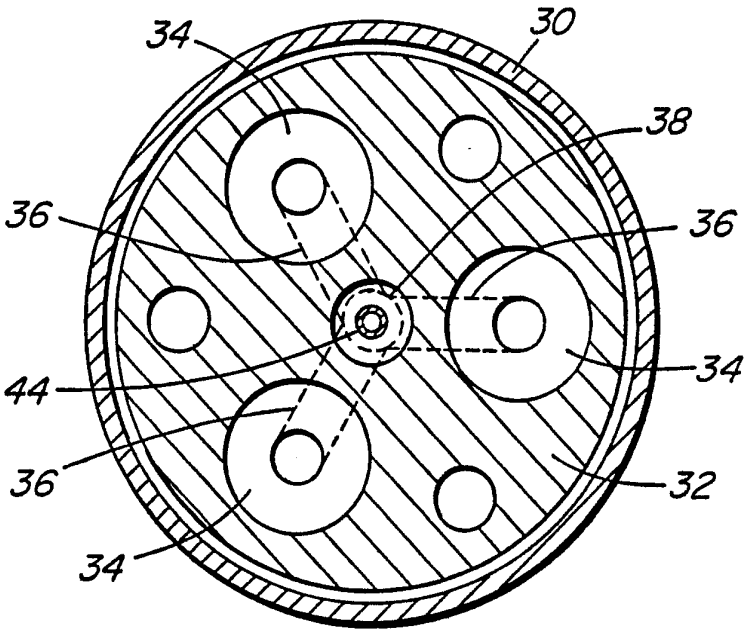
34
30
38
36
36
44
34
36
32
34

FIG. 3

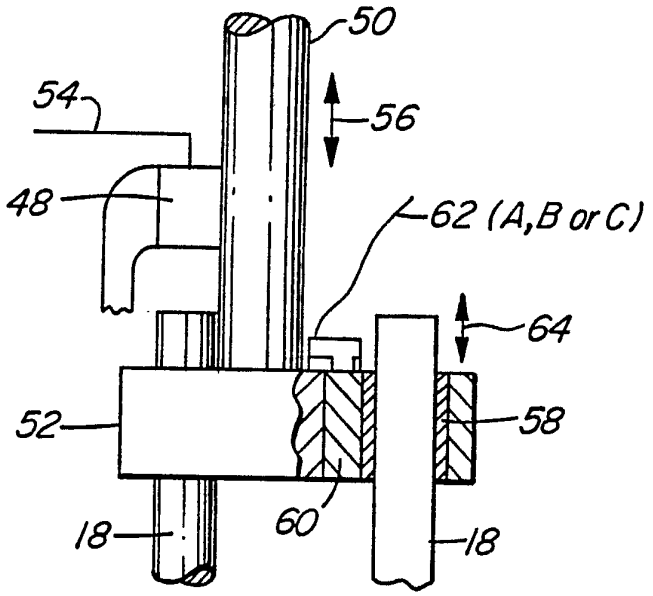
50
54
56
48
62 (A,B or C)
64
52
58
18
60
18

FIG. 4

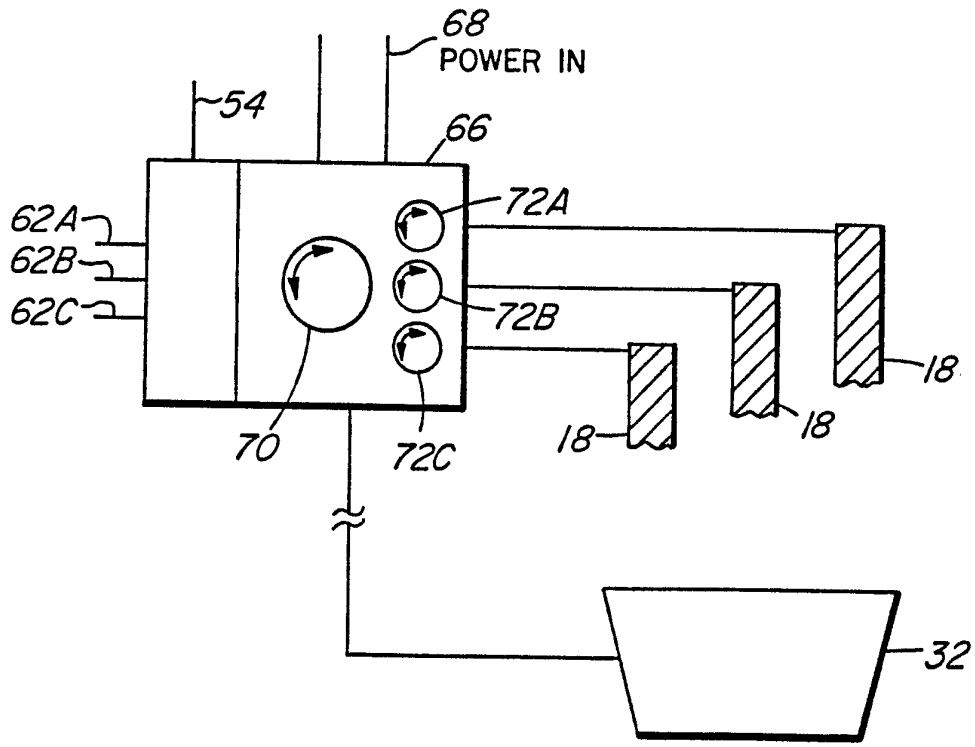
68
POWER IN
54
66
62A
62B
62C
72A
72B
72C
70
18
18
18
32

FIG. 5

INTERNATIONAL SEARCH REPORT

International Application No PCT/CA 91/00203

I. CLASSIFICATION OF SUBJECT MATTER (if several classification symbols apply, indicate all) [6]

According to International Patent Classification (IPC) or to both National Classification and IPC

IPC[5]: H 05 H 1/42

II. FIELDS SEARCHED

Minimum Documentation Searched [7]

Classification System	Classification Symbols
IPC[5]	H 05 H 1/00

Documentation Searched other than Minimum Documentation to the Extent that such Documents are included in the Fields Searched [8]

III. DOCUMENTS CONSIDERED TO BE RELEVANT [9]

Category [10]	Citation of Document, [11] with indication, where appropriate, of the relevant passages [12]	Relevant to Claim No. [13]
Y	US, A, 4 361 441 (TYLKO) 30 November 1982 (30.11.82), see fig., claims 1,5, column 11, line 58 - column 12, line 55.	1,3,7, 8
A	see totality.	2,4-6, 11-17
	--	
Y	US, A, 4 352 044 (ZHUKOV) 28 September 1982 (28.09.82), see fig., column 5, lines 25-60.	1,3,7, 8
A	see totality.	11,13, 17,18
	--	
A	US, A, 4 631 452 (HARRY) 23 December 1986 (23.12.86), see fig. 1,11, 16-19, abstract, column 12, lines 4-18.	1,3,4, 6,11, 13,14, 16
	--	
A	GB, A, 2 082 029	1,4,

* Special categories of cited documents: [14]

"A" document defining the general state of the art which is not considered to be of particular relevance

"E" earlier document but published on or after the international filing date

"L" document which may throw doubts on priority claim(s) or which is cited to establish the publication date of another citation or other special reason (as specified)

"O" document referring to an oral disclosure, use, exhibition or other means

"P" document published prior to the international filing date but later than the priority date claimed

"T" later document published after the international filing date or priority date and not in conflict with the application but cited to understand the principle or theory underlying the invention

"X" document of particular relevance; the claimed invention cannot be considered novel or cannot be considered to involve an inventive step

"Y" document of particular relevance; the claimed invention cannot be considered to involve an inventive step when the document is combined with one or more other such documents, such combination being obvious to a person skilled in the art.

"&" document member of the same patent family

IV. CERTIFICATION

Date of the Actual Completion of the International Search	Date of Mailing of this International Search Report
07 August 1991	10.09.91
International Searching Authority	**Signature of Authorized Officer**
EUROPEAN PATENT OFFICE	Mme. M. van der Drift

Form PCT/ISA/210 (second sheet) (January 1985)

III. DOCUMENTS CONSIDERED TO BE RELEVANT (CONTINUED FROM THE SECOND SHEET)

Category *	Citation of Document, ¹¹ with indication, where appropriate, of the relevant passages	Relevant to Claim No.
	(INSTITUT LEKTROSVARKI) 24 February 1982 (24.02.82), see fig., abstract, claims. --	7-9
A	US, A, 3 578 943 (SCHOUMAKER) 18 May 1971 (18.05.71), see fig., column 2, lines 1-30. ----	1,3,7, 11,13, 17

ANHANG
zum internationalen Recherchenbericht über die internationale Patentanmeldung Nr.

ANNEX
to the International Search Report to the International Patent Application No.

ANNEXE
au rapport de recherche international relatif á la demande de brevet international n°

PCT/CA91/00203 SAE 48253

In diesem Anhang sind die Mitglieder der Patentfamilien der im obengenannten internationalen Recherchenbericht angeführten Patentdokumente angegeben. Diese Angaben dienen nur zur Unterrichtung und erfolgen ohne Gewähr.

This Annex lists the patent family members relating to the patent documents cited in the above-mentioned international search report. The Office is in no way liable for these particulars which are given merely for the purpose of information.

La présente annexe indique les membres de la famille de brevets relatifs aux documents de brevets cités dans le rapport de recherche international visée ci-dessus. Les reseignements fournis sont donnés á titre indicatif et n'engagent pas la responsibilité de l'Office.

Im Recherchenbericht angeführtes Patentdokument Patent document cited in search report Document de brevet cité dans le rapport de recherche	Datum der Veröffentlichung Publication date Date de publication	Mitglied(er) der Patentfamilie Patent family member(s) Membre(s) de la famille de brevets	Datum der Veröffentlichung Publication date Date de publication
US-A - 4361441	30-11-82	AT-E - 8092	15-07-84
		AU-A1-57316/80	23-10-80
		AU-B2- 539963	25-10-84
		BR-A - 8002357	02-12-80
		CA-A1- 1144104	05-04-83
		DE-C0- 3068294	26-07-84
		DK-A - 1569/80	18-10-80
		DK-B - 152000	18-01-88
		DK-C - 152000	04-07-88
		EP-A1- 19362	26-11-80
		EP-B1- 19362	20-06-84
		JP-A2-55157325	08-12-80
		JP-B4-63050058	06-10-88
		MX-A - 153443	13-10-86
		NZ-A - 193404	16-03-84
		US-A - 4394162	19-07-83
		ZA-A - 8002187	25-02-81
		US-A - 4394162	19-07-83
US-A - 4352044	28-09-82	Keine - None - Rien	
US-A - 4631452	23-12-86	Keine - None - Rien	
GB-A - 2082029		AT-A - 9141/80	15-01-86
		AT-B - 381055	25-08-86
		GB-A1- 2082029	24-02-82
		GB-B2- 2082029	31-05-84
		SE-B - 430667	05-12-83
		SE-C - 430667	15-03-84
		WO-A1- 8102430	03-09-81
		DE-C2- 3050278	26-06-86
		JP-T2-57500461	18-03-82
		SE-A - 8106317	26-10-81
US-A - 3578943	18-05-71	CA-A1- 919529	23-01-73
		DE-A - 2012312	24-09-70