US00D560523S

(12) **United States Design Patent** (10) **Patent No.: US D560,523 S**
Nakamura (45) **Date of Patent: ** Jan. 29, 2008**

(54) **GPS RECEIVER**

(75) Inventor: **Takatoshi Nakamura**, Shinagawa-ku (JP)

(73) Assignee: **Sony Computer Entertainment Inc.**, Tokyo (JP)

(**) Term: **14 Years**

(21) Appl. No.: **29/263,549**

(22) Filed: **Jul. 26, 2006**

(30) **Foreign Application Priority Data**

Mar. 14, 2006 (JP) D2006-006398

(51) **LOC (8) Cl.** **10-04**
(52) **U.S. Cl.** **D10/74**; D8/355
(58) **Field of Classification Search** D8/349, D8/354, 355, 380, 381; D10/65, 74; 43/19.2, 43/21.2, 22, 23; 211/70.8; 248/311.2, 314, 248/309.1, 447, 447.2, 454–458, 917–924, 248/904
See application file for complete search history.

(56) **References Cited**

U.S. PATENT DOCUMENTS

6,758,454 B2 * 7/2004 Smed 248/917
6,848,662 B2 * 2/2005 Paramonoff et al. 248/309.1

* cited by examiner

Primary Examiner—Antoine D. Davis

(74) *Attorney, Agent, or Firm*—Rader, Fishman & Grauer, PLLC

(57) **CLAIM**

The ornamental design for a GPS receiver, as shown and described.

DESCRIPTION

FIG. **1** is a front elevational view of a GPS receiver showing my new design;

FIG. **2** is a rear elevational view thereof;

FIG. **3** is a left elevational view thereof;

FIG. **4** is a right elevational view thereof;

FIG. **5** is a top plan view thereof;

FIG. **6** is a bottom plan view thereof.

FIG. **7** is a top front right perspective view thereof; and

FIG. **8** is a top rear left perspective view thereof.

FIG. **9** is a right elevational view thereof, wherein the present article is in a folded state;

FIG. **10** is a top front right perspective view thereof; wherein the present article is in a folded state;

FIG. **11** is a top rear left perspective view thereof; wherein the present article is in a folded state; and,

FIG. **12** is a reference view wherein the present article is in a used state.

The portions indicated in broken lines are for illustrative purposes only and form no part in the claimed design.

1 Claim, 12 Drawing Sheets

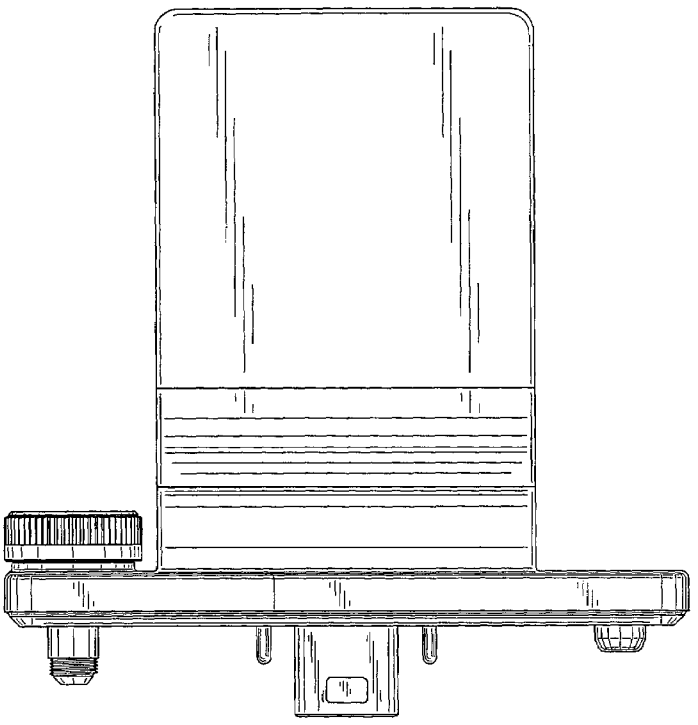

Fig.1

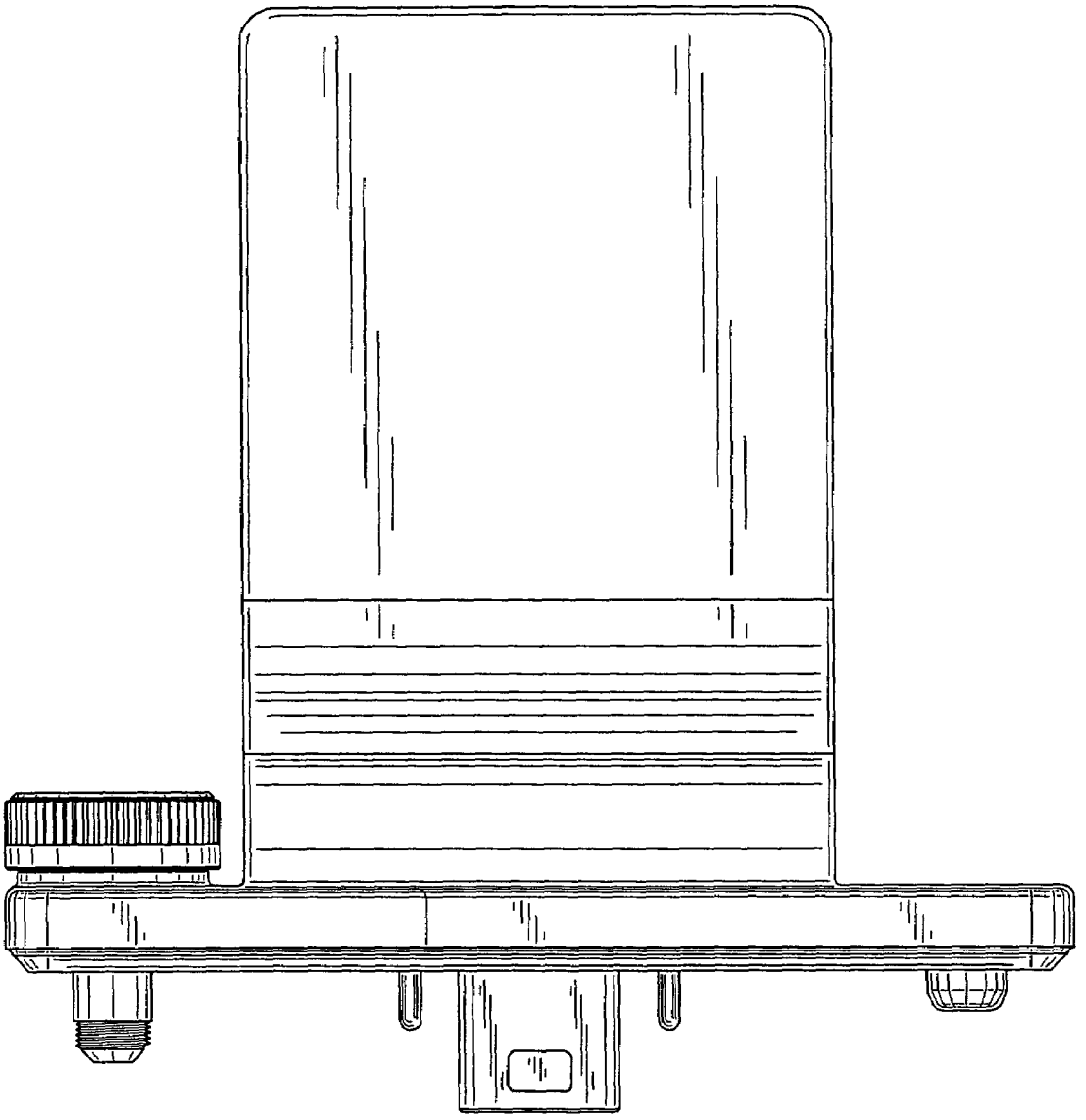

Fig.2

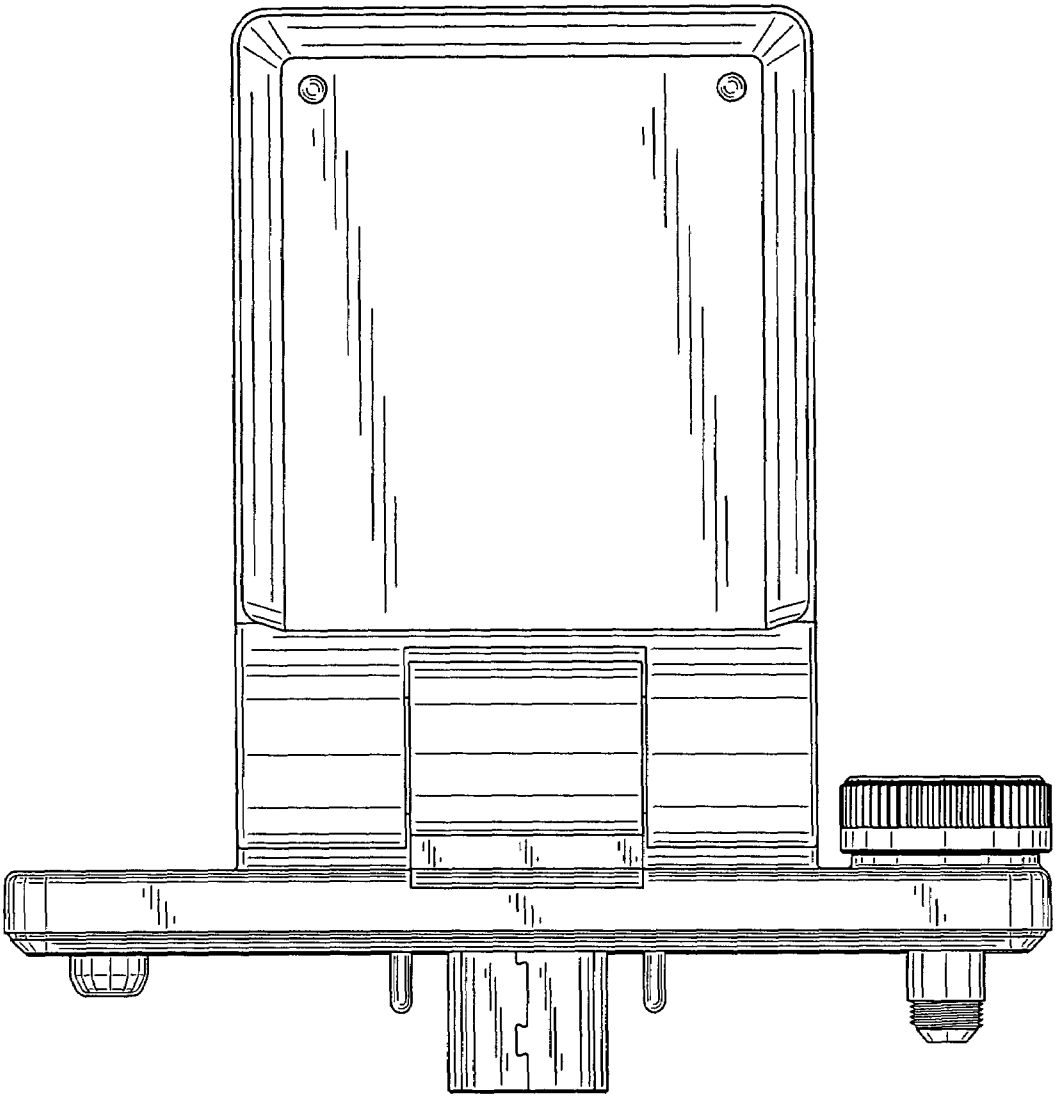

Fig.3

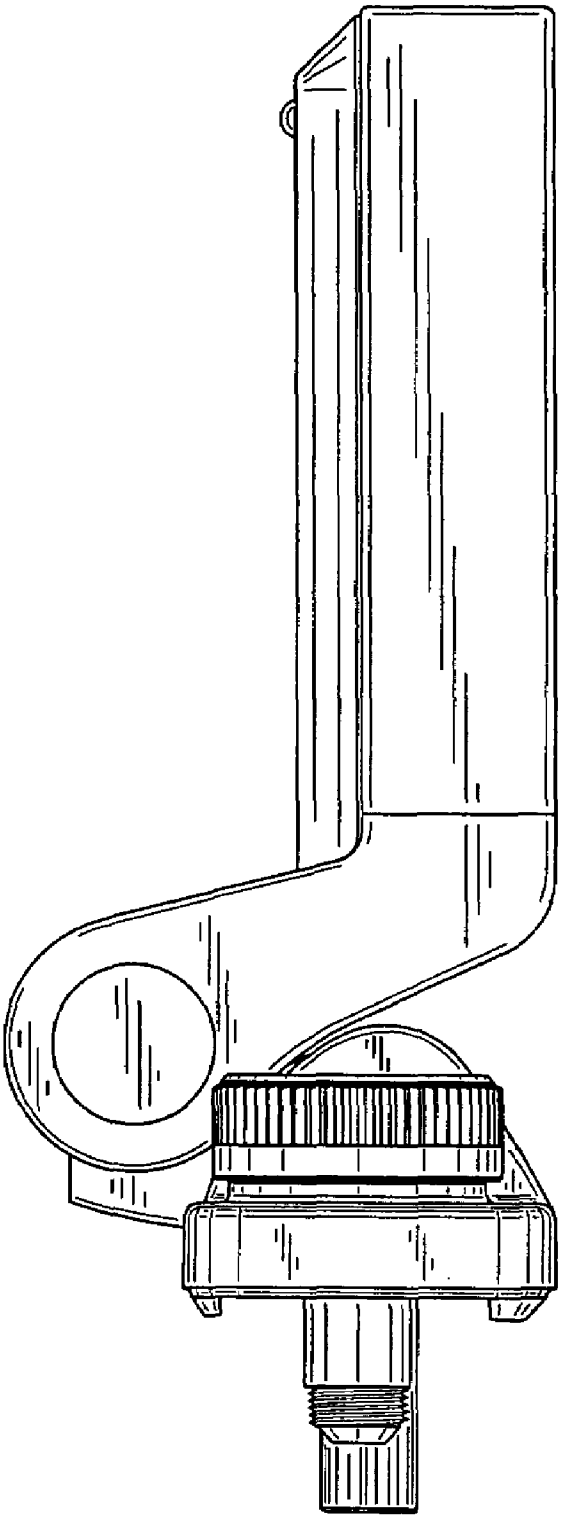

Fig.4

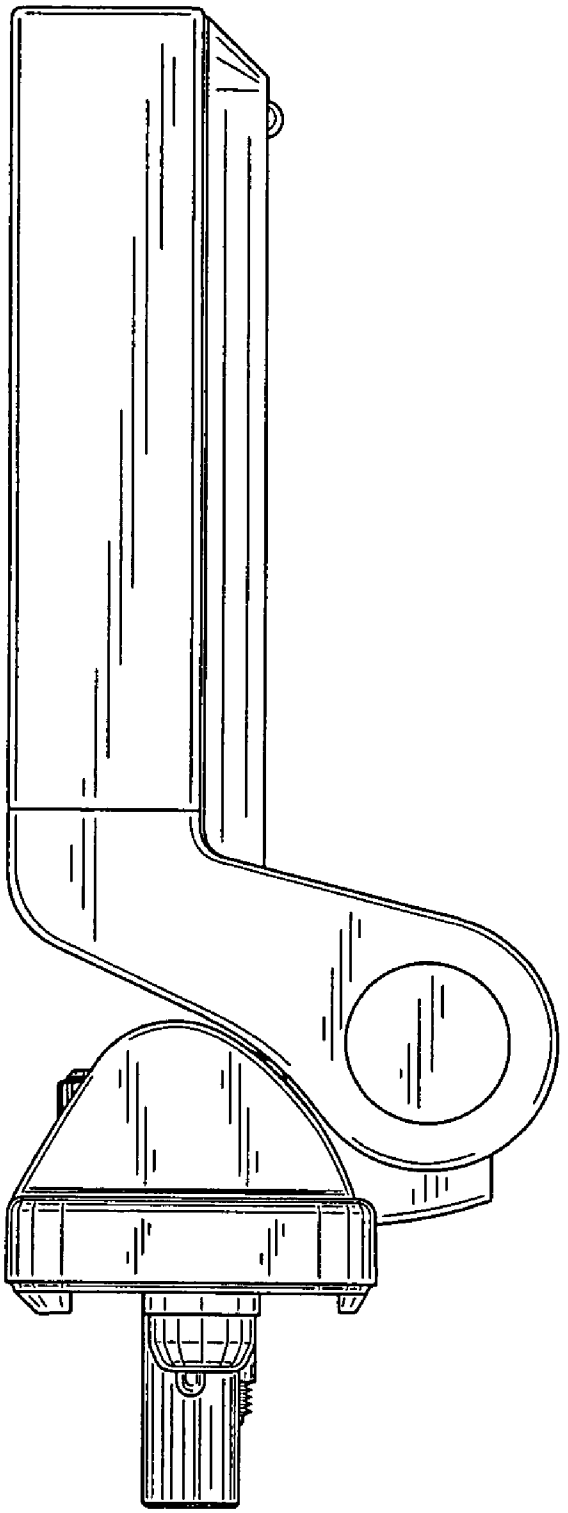

Fig.5

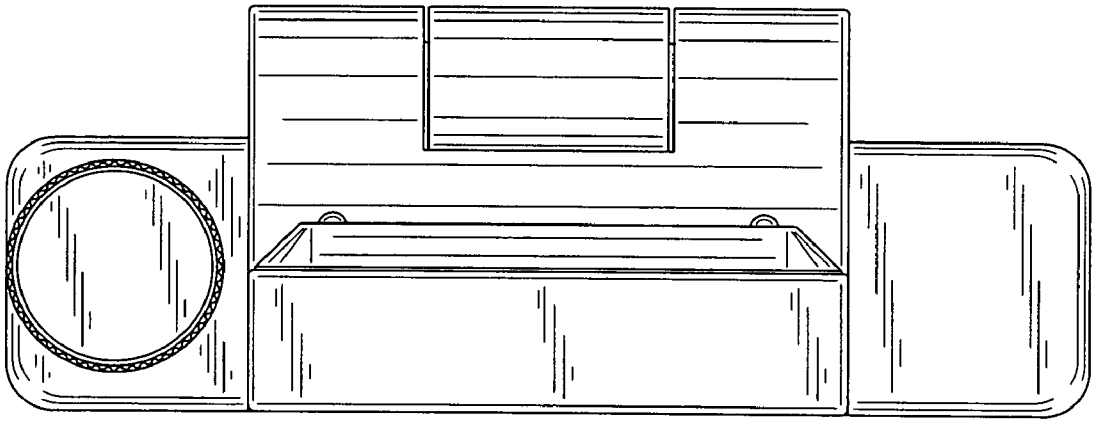

Fig.6

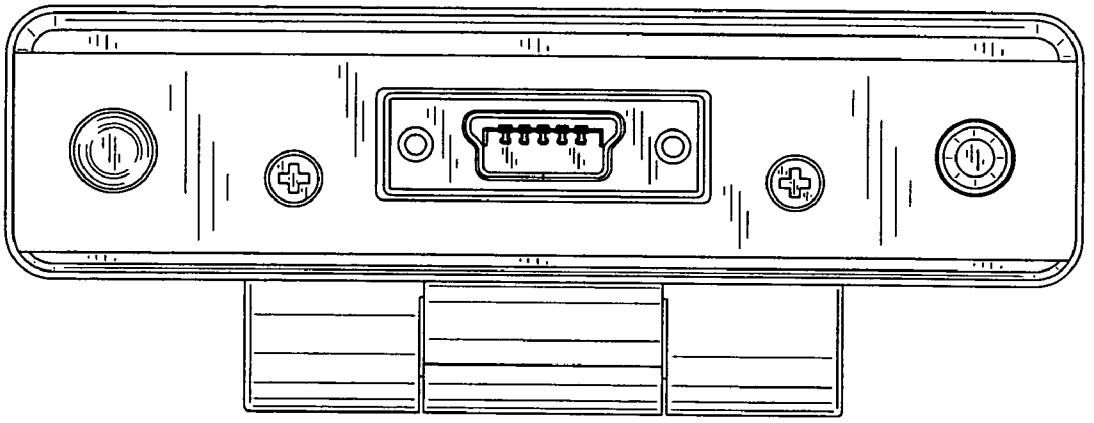

Fig.7

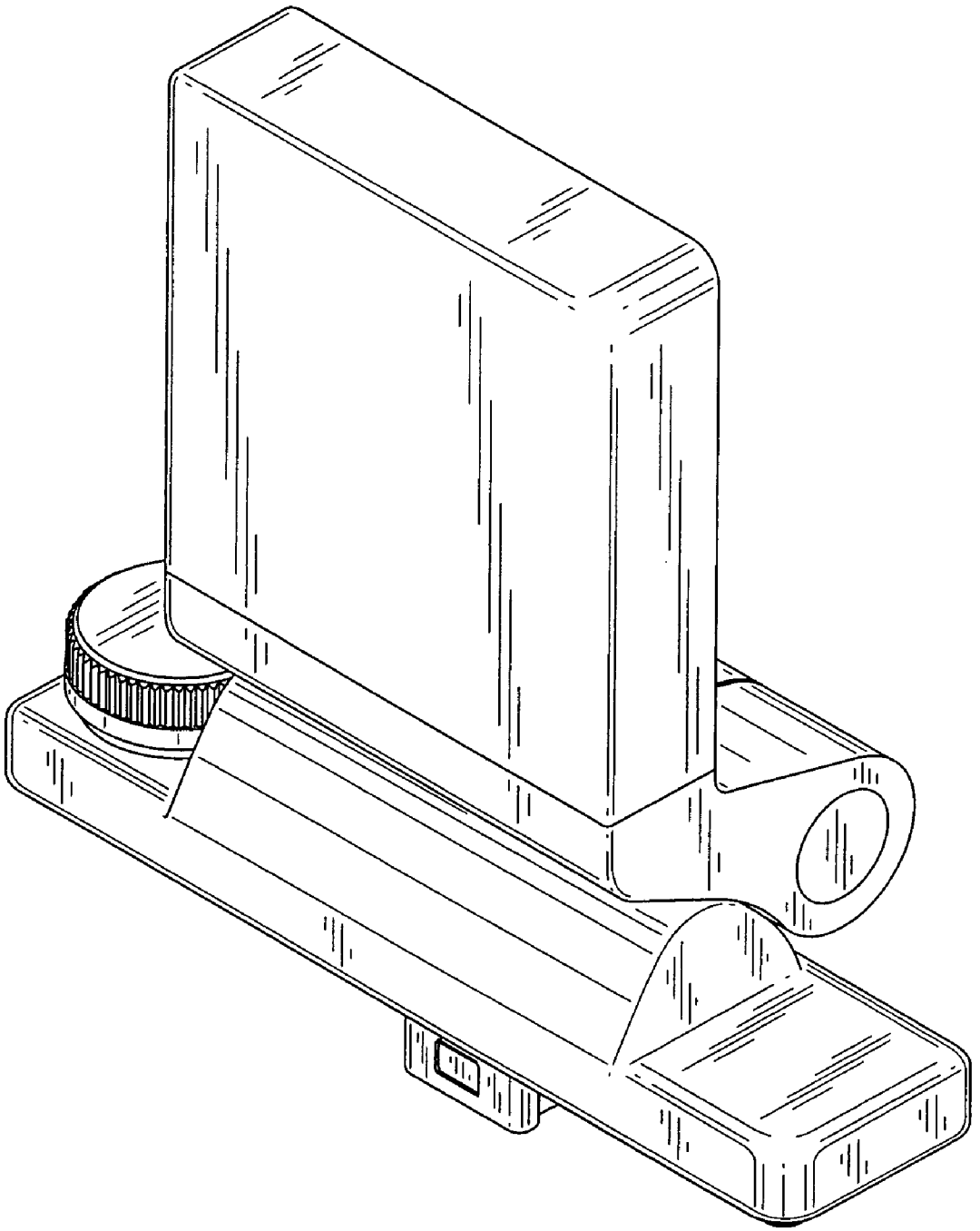

Fig.8

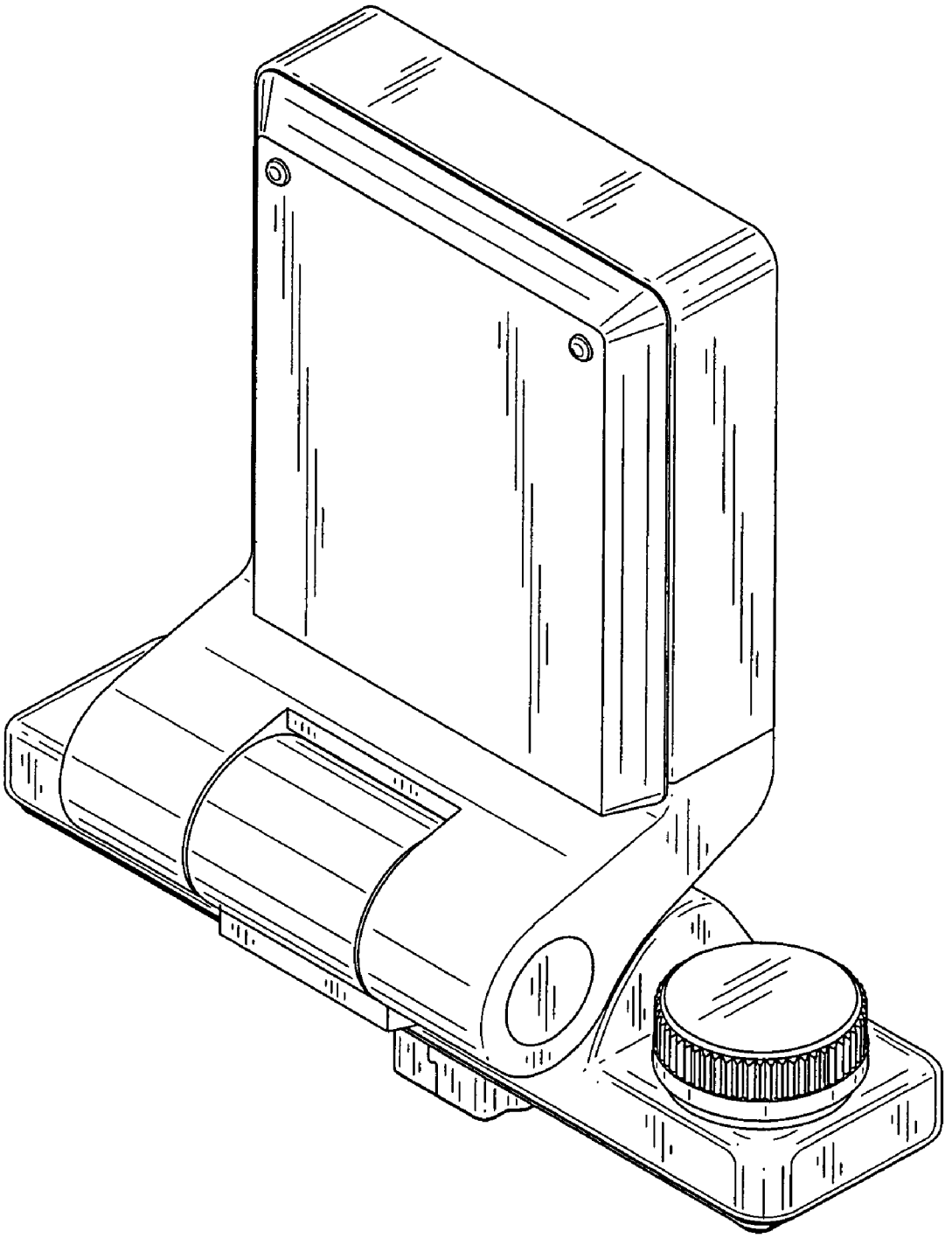

Fig.9

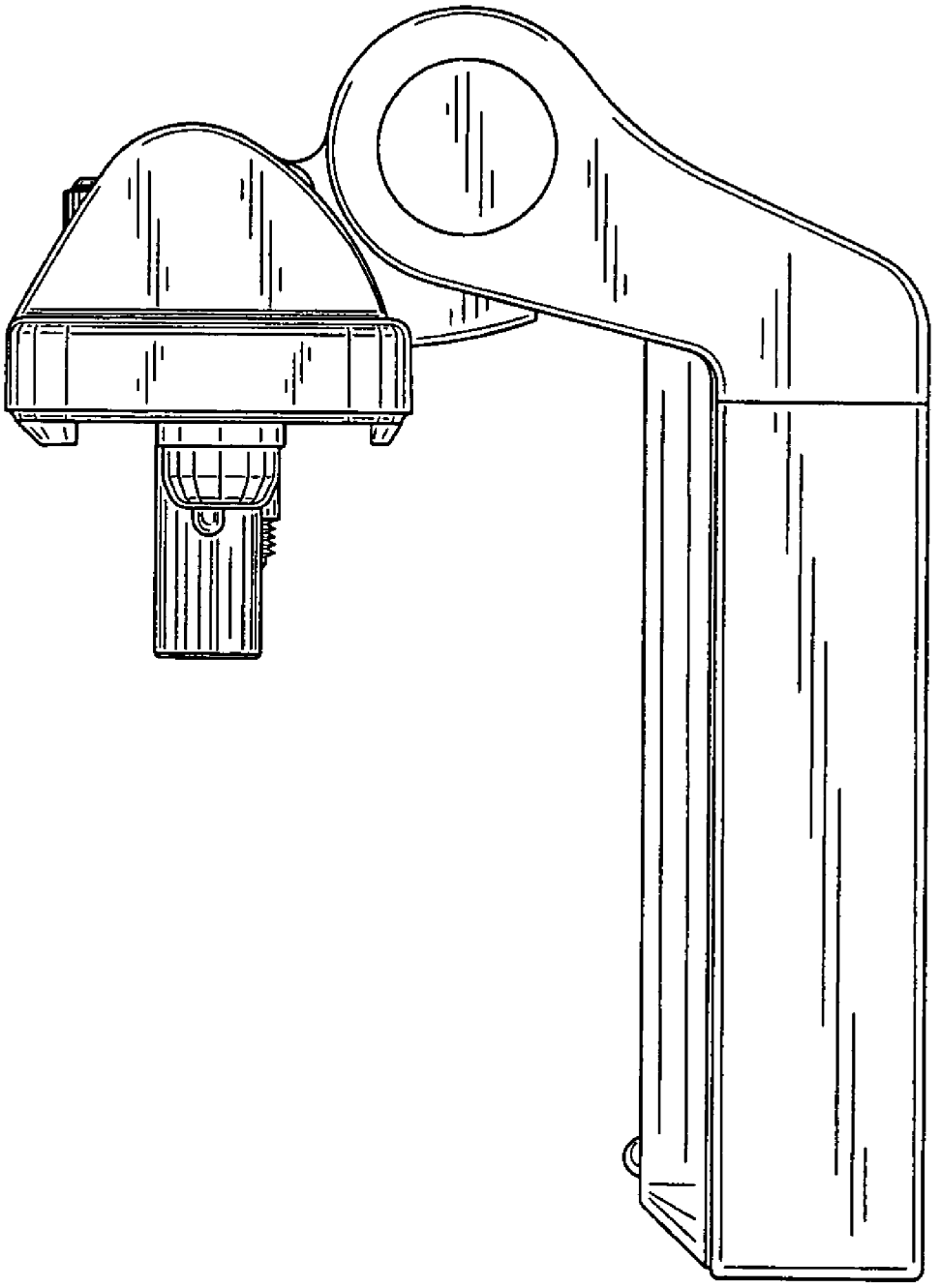

Fig.10

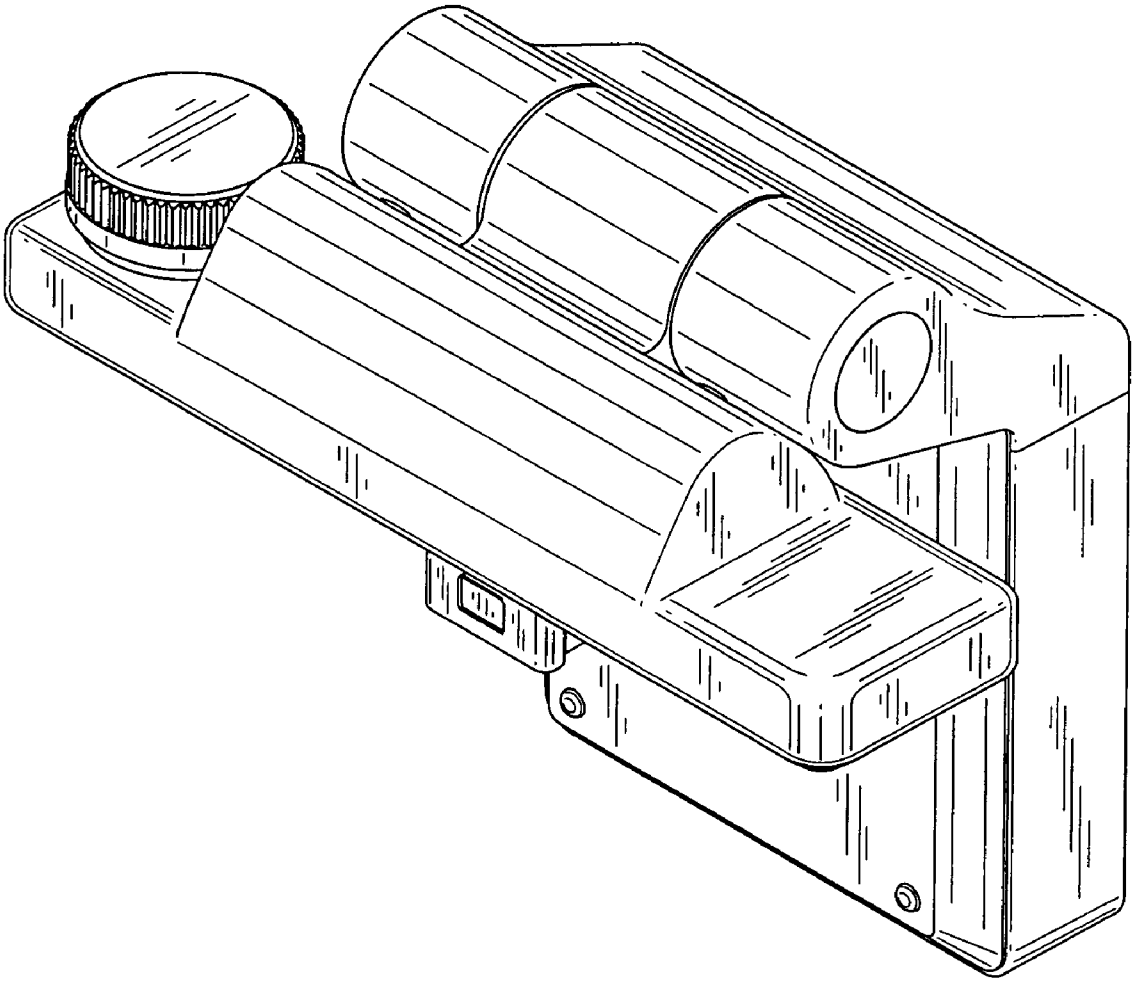

Fig.11

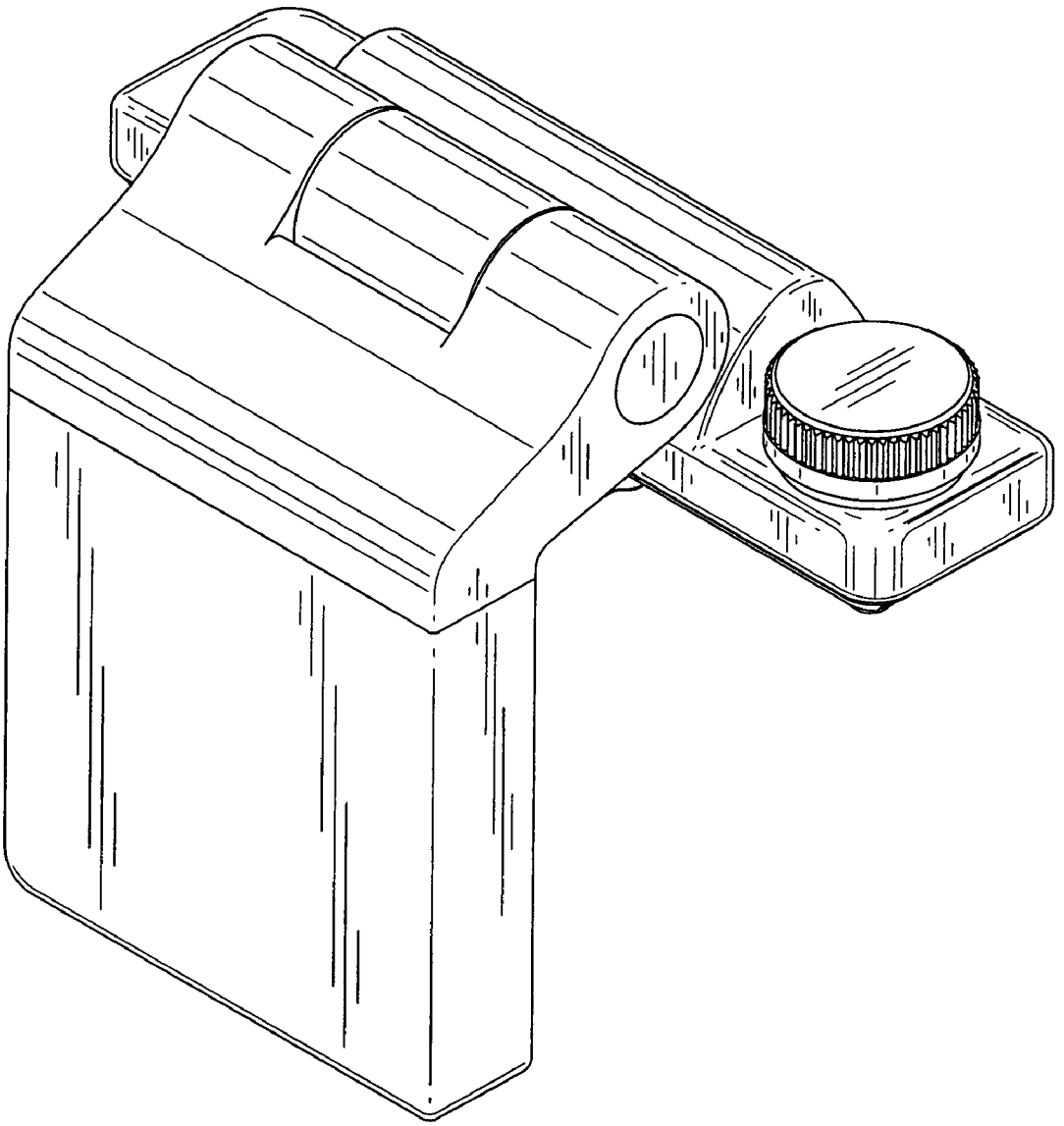

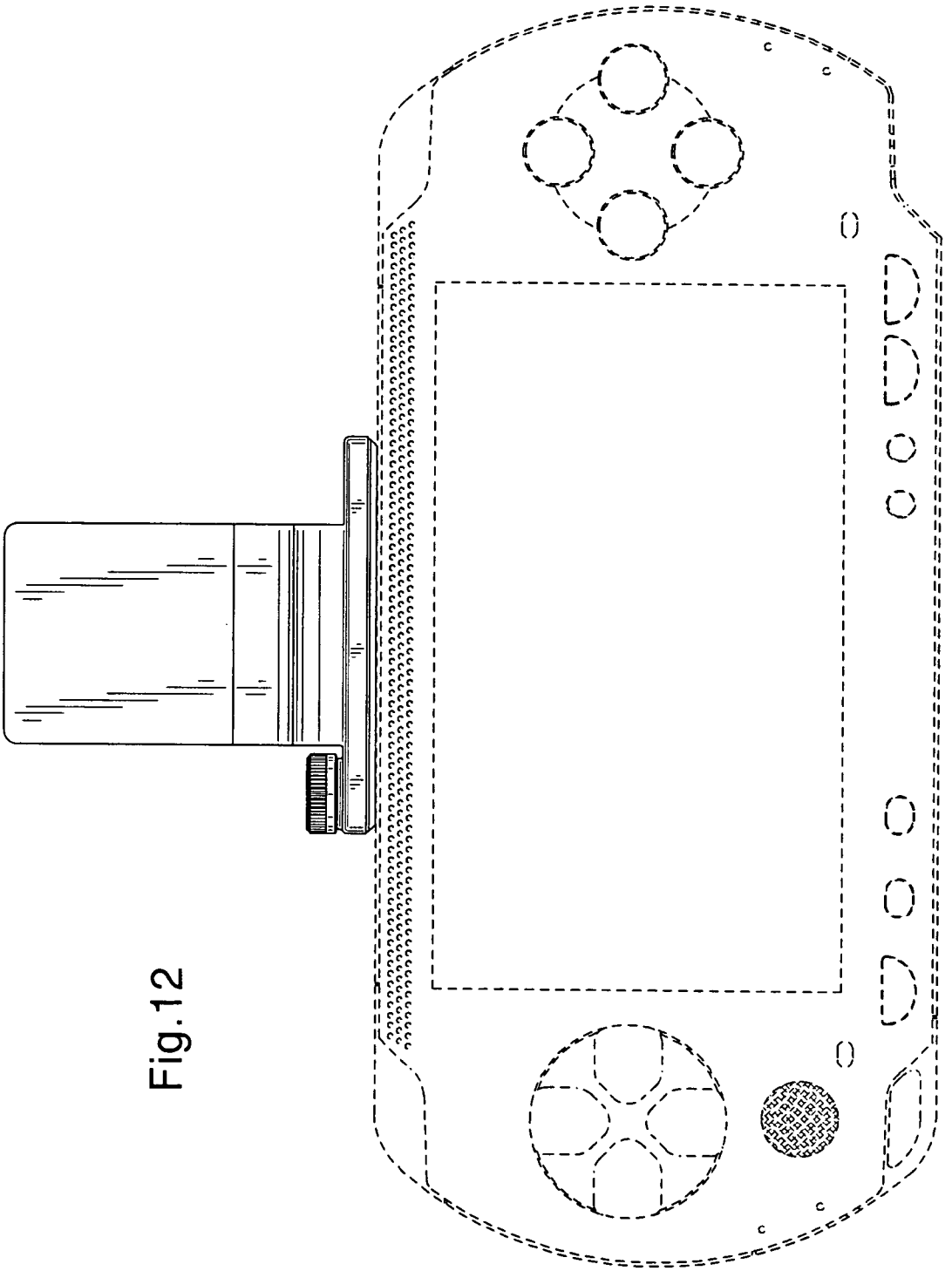

Fig.12