Jan. 29, 1924. 1,482,160

H. C. STEVENS

TYPEWRITER ATTACHMENT

Filed Jan. 13, 1923 4 Sheets-Sheet 1

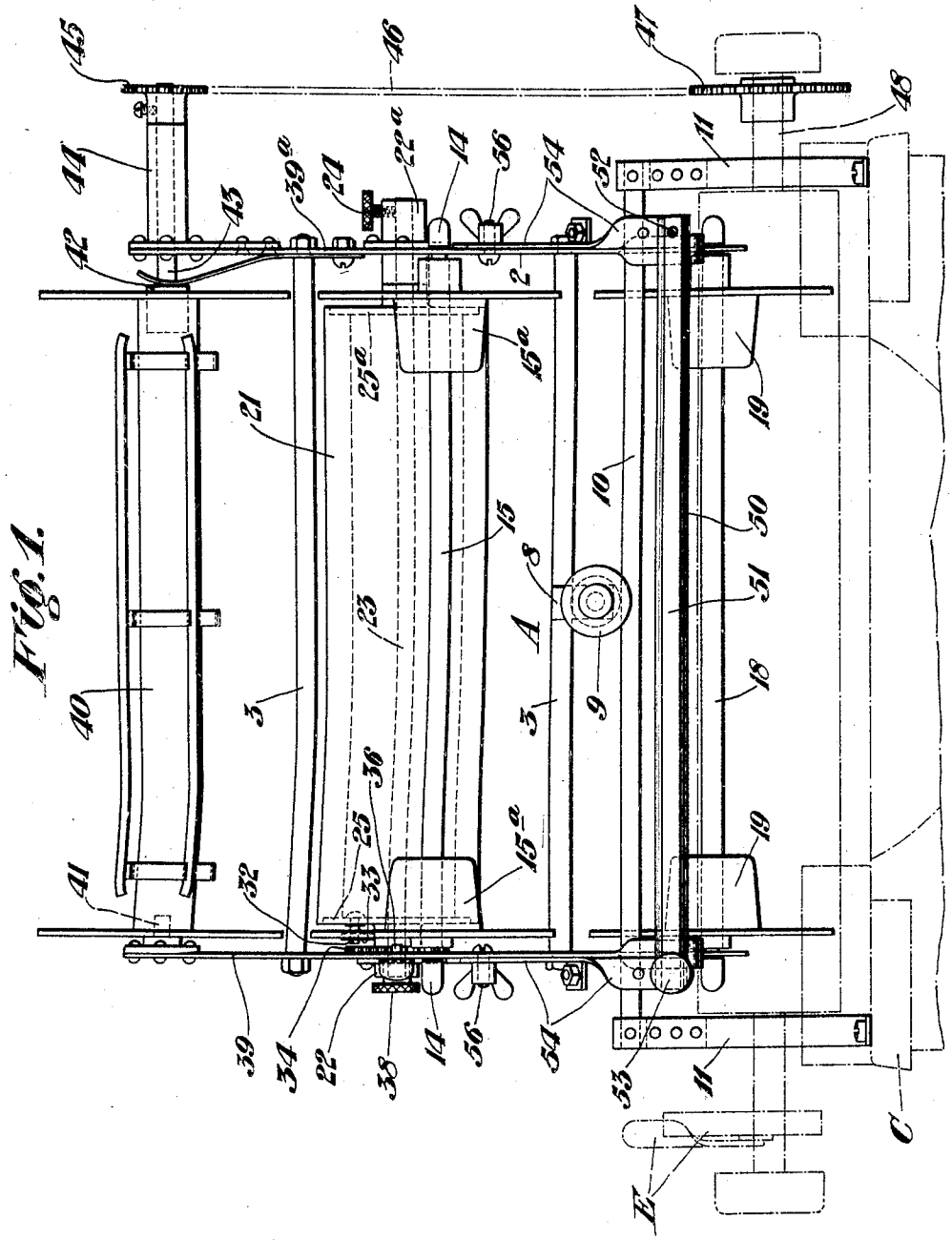

Fig. 1.

Witnesses:
Edwin Trueb

Inventor:
HAYES C. STEVENS,
By: D. Anthony Usina
his Attorney

Jan. 29, 1924. 1,482,160

H. C. STEVENS

TYPEWRITER ATTACHMENT

Filed Jan. 13, 1923 4 Sheets-Sheet 2

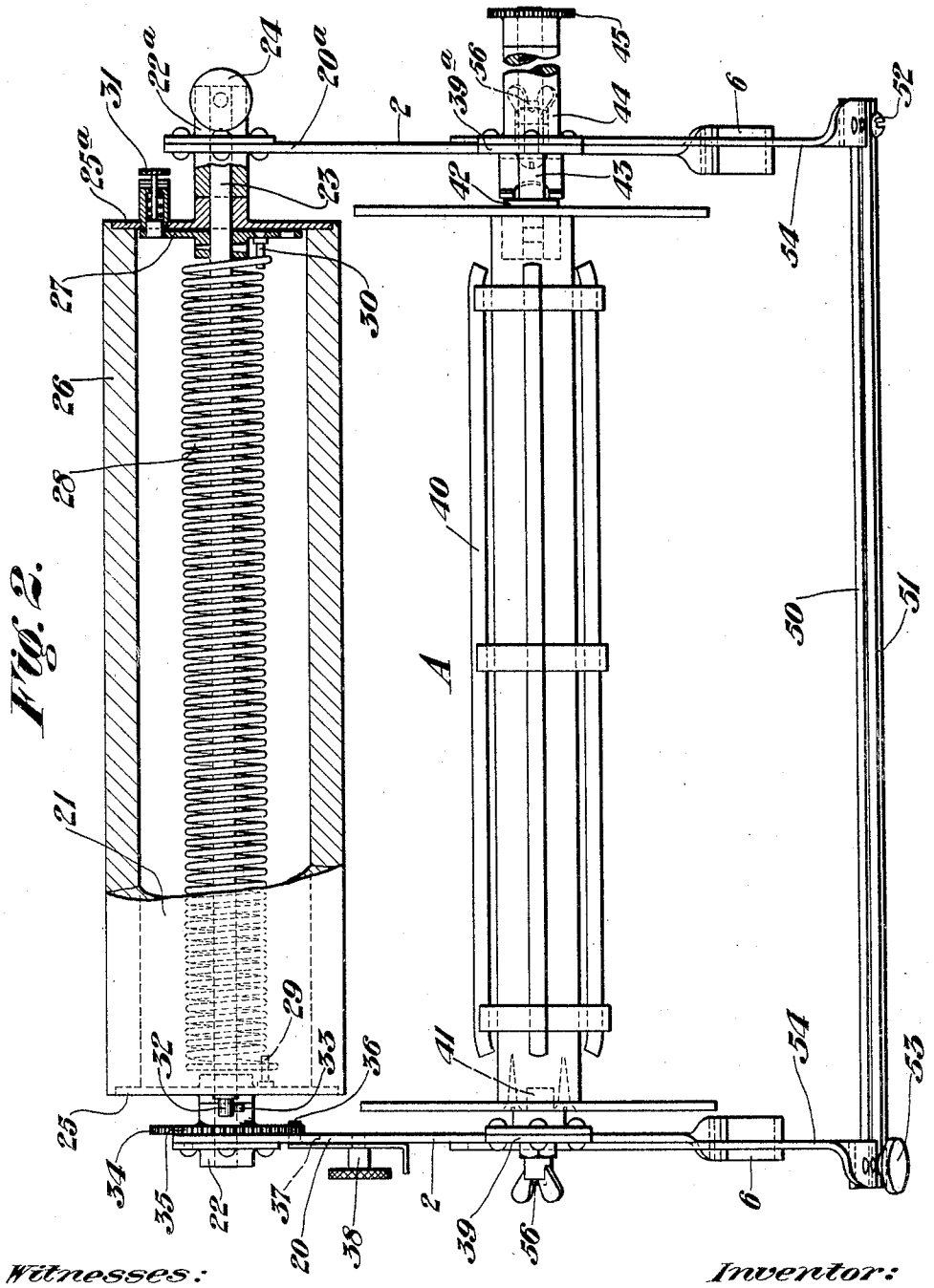

Fig. 2.

Witnesses:
Edwin Trueb

Inventor:
HAYES C. STEVENS,
by: D. Anthony Usina
his Attorney.

Jan. 29, 1924. 1,482,160

H. C. STEVENS

TYPEWRITER ATTACHMENT

Filed Jan. 13, 1923 4 Sheets-Sheet 3

Fig. 3.

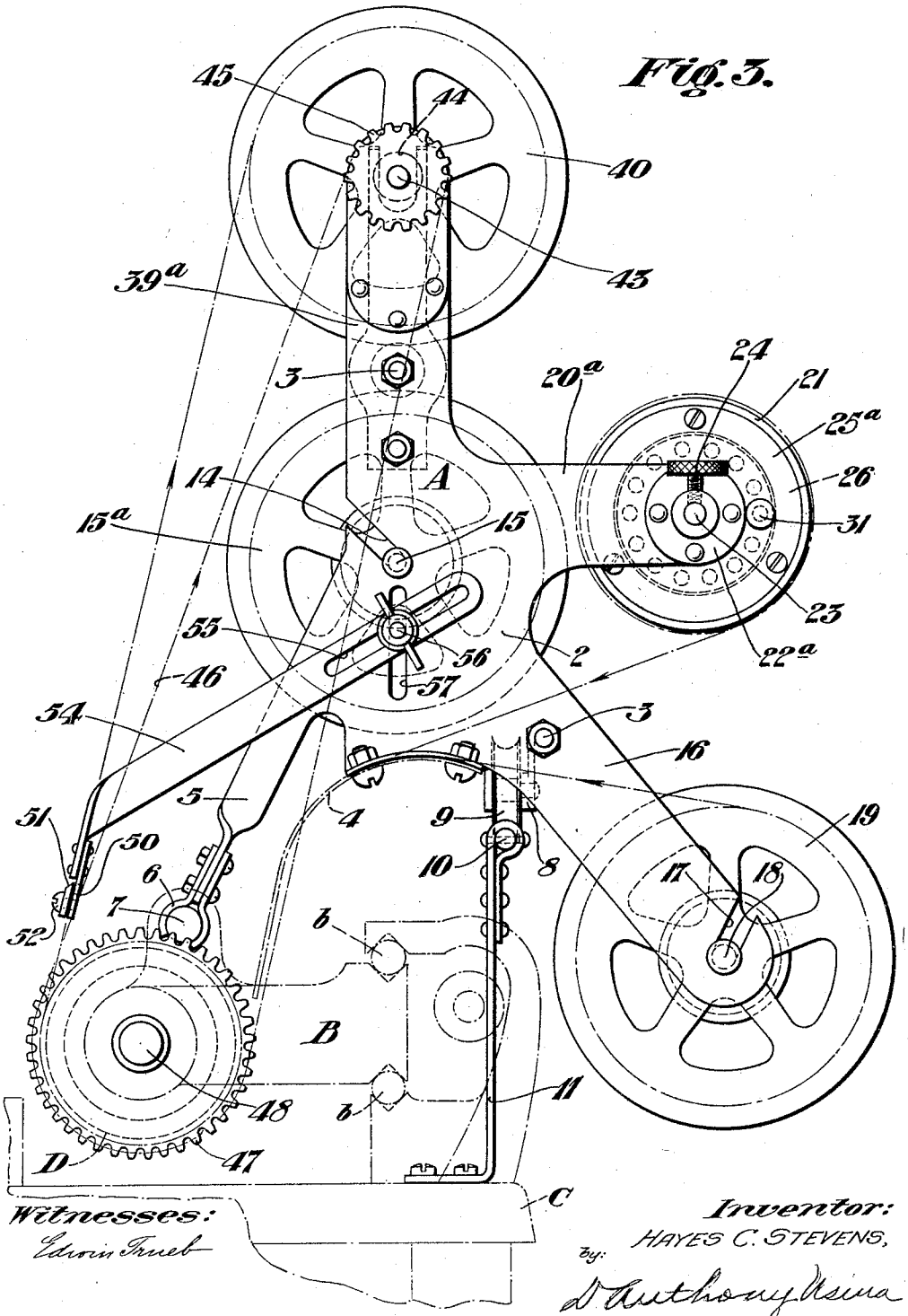

Witnesses:
Edwin Trueb

Inventor:
HAYES C. STEVENS,
by:
D'Anthony Usina
his Attorney.

Jan. 29, 1924. 1,482,160

H. C. STEVENS

TYPEWRITER ATTACHMENT

Filed Jan. 13, 1923 4 Sheets-Sheet 4

Fig. 4.

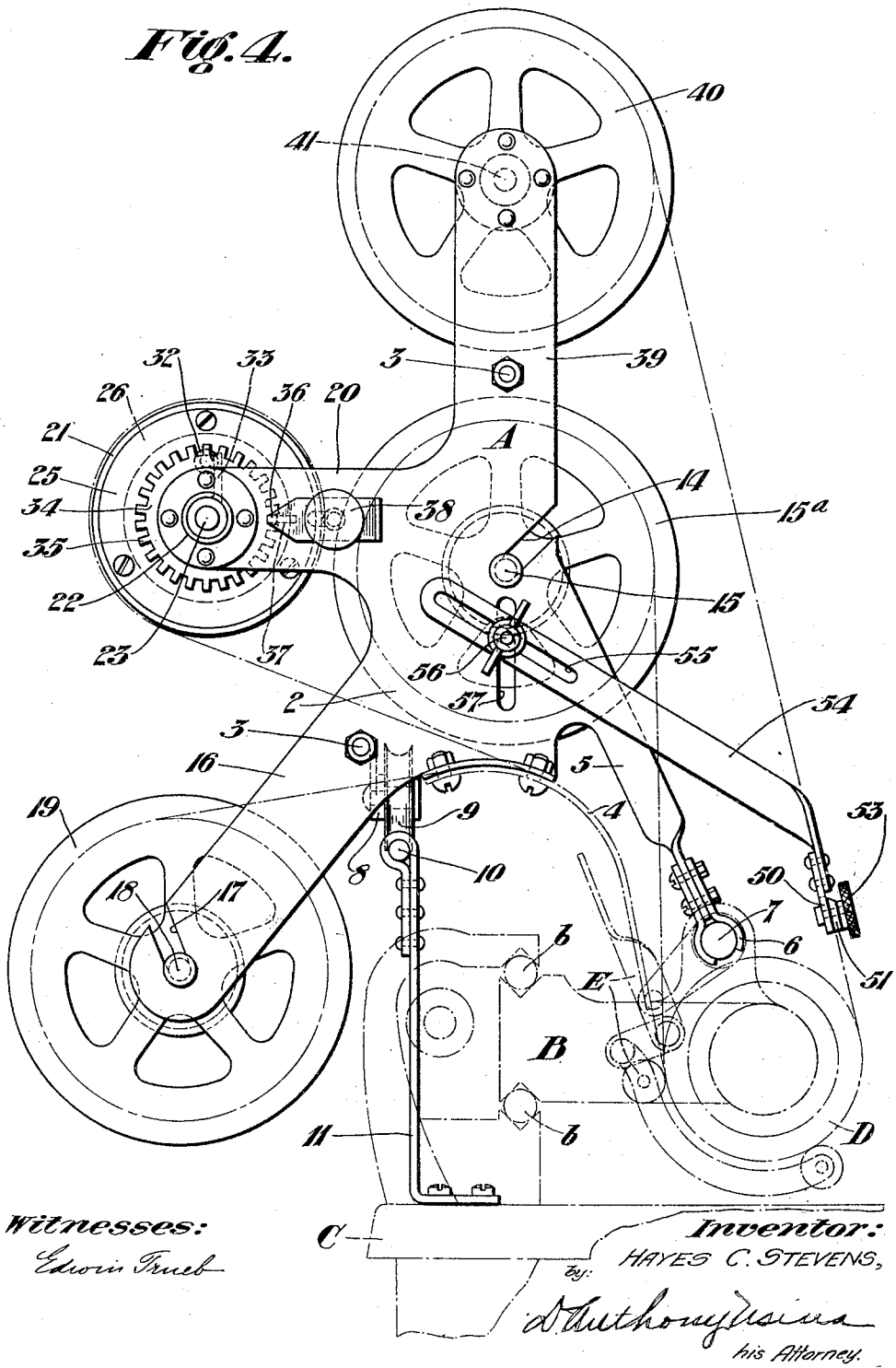

Witnesses:
Edwin Trueb

Inventor:
HAYES C. STEVENS,
by: D. Anthony Usina
his Attorney.

Patented Jan. 29, 1924. 1,482,160

UNITED STATES PATENT OFFICE.

HAYES C. STEVENS, OF PITTSBURGH, PENNSYLVANIA.

TYPEWRITER ATTACHMENT.

Application filed January 13, 1923. Serial No. 612,431.

To all whom it may concern:

Be it known that I, HAYES C. STEVENS, a citizen of the United States, and resident of Pittsburgh, in the county of Allegheny and State of Pennsylvania, have invented certain new and useful Improvements in Typewriter Attachments, of which the following is a specification.

This invention relates to typewriting machines, and more particularly to automatic paper and carbon supplying mechanism for such machines.

One object of this invention is to provide mechanism of this class that may be attached to the standard typewriters in use, and to provide suitable supports for such mechanism.

Another object is to provide improved mechanism of this type including a novel carbon carrying roll.

A still further object is to provide mechanism of this class having the novel design, construction and combination of parts described in the following specification and illustrated in the accompanying drawings.

In the drawings, Figure 1 is a front elevation of the invention.

Figure 2 is a top plan thereof.

Figures 3 and 4 are end elevations thereof.

Referring more particularly to the drawings, the letter A designates my automatic paper and carbon supplying mechanism as a whole, which is mounted on the carriage B of a standard typewriter, having a body C of usual design. The carriage B is mounted for the usual transverse sliding movement on track members *b*—*b* secured to the body C, and carries the usual platen D and paper holding and release levers E.

The numeral 2 designates the side members of the frame which are tied together in spaced relation by transverse tie rods 3. The side members 2 are bolted to the paper guide apron 4 of the typewriter carriage. An arm 5 extends downwardly and forwardly on an angle from each of the side members 2 and is provided with a bearing guide 6 adapted to be engaged on the paper clip rod 7 of the typewriter. A bracket 8 is secured intermediate the ends of the lowermost tie rod 3 and carries a grooved roller 9 adapted to ride on a track rod 10 mounted in brackets 11 secured to the body C of the typewriter. It will thus be seen that while this device is bolted to and movable with the carriage it is supported by the main frame of the typewriter through the arms 5 and roller 9.

The side members 2 are provided with, in their forward edges, downwardly and rearwardly directed slots 14 adapted to form bearings for the removable copy paper roller, which comprises a shaft member 15 and end members 15ª.

The side members 2 also are provided with integral arms 16 which project downwardly and rearwardly on an angle from the rear edges of said members, and are provided with bearing slots 17 for the removable original paper roller, which comprises a shaft member 18 and end members 19.

The side members 2 have rearwardly extending arms 20 and 20ª, respectively, for supporting the carbon sheet roller 21. The arms 20 and 20ª are provided with bearings 22 and 22ª, respectively, in which the shaft 23 of the roller 21 is journaled. The bearing 22ª is provided with a set screw 24 adapted to lock the shaft 23 against rotation. The roller 21 comprises end disks 25, 25ª and cylinder portion 26 secured to the end disks. An interior disk 27 is keyed to the shaft 23 and abuts the inner face of the disk 25ª, and a coil spring 28 is mounted around the shaft 23 and has one end secured to a pin 29 in the end disk 25 and its other end secured to a pin 30 in the interior disk 27. A spring pressed locking pin 31 is mounted in the end disk 25ª and is adapted to extend through an aperture therein into an aperture in the interior disk 27 to lock these disks against relative rotation. The end disk 25 is provided with a stop pin 32 projecting outwardly therefrom and adapted to engage a lug 33 on the ratchet disk 34. The disk 34 is mounted for rotation on the shaft 23, and has a toothed edge 35 adapted to be engaged by a dog 36 slidably mounted in a slot 37 in the arm 20, and adapted to be locked in position by a set screw 38.

The side members 2 are provided with vertical arms 39 and 39ª for supporting a copy windup roll 40. The roll 40 is removably journaled on a stub shaft 41 mounted on the arm 39 and is provided at its other end with a clutch face adapted to be engaged by a spring pressed clutch member 42 slidably mounted on a shaft 43 journaled in a bearing 44 secured to the arm 39ª. The shaft 43 is provided with a sprocket 45 on its outer end adapted to be connected by a sprocket chain

46 to a sprocket 47 on the platen shaft 48 of the typewriter.

A knife member is mounted on the side members 2 and comprises a U-shaped member having its closed side 50 forming one of a pair of blades. A second blade 51 is hinged at 52 to the first blade and locked at 53. The blades 50 and 51 are spaced sufficiently to permit the free movement of paper therewith. The side arms 54 of the knife member are provided with slots 55 and are pivotally mounted on bolts 56 extending through the slots 55 and through vertically extending slots 57 in the side members 2. It will thus be seen that the knife member may be adjusted toward or away from the side members 2, and is also angularly and vertically adjustable relative to said side members.

The operation of the device is as follows— Assuming that the device is in operative position on a typewriter, and the copy and original rolls of paper are positioned on their respective rollers; also that a strip of carbon paper is rolled on the roller 21. The carbon paper roller 21 will be first tensioned by pulling out pin 31 so as to allow free movement of the roller relative to the shaft 23, the dog 36 being also disengaged from the ratchet disk 34. The roller 21 will then be rotated counterclockwise until the spring 28 is at proper tension, when the pin 31 will be again placed in locked position to lock the roll against further movement. The set screw 24 is then loosened to permit the shaft 23 to rotate.

Paper from the copy roll, original roll and carbon sheet roll is then fed together (that is, the carbon paper is between the original roll and copy sheets) down around the typewriter platen and up through the space between the knife blades 50—51. The ratchet disk 34 is then locked in position by the dog 36 so that the stop pin 32 will engage the lug 33. The set screw 24 is again tightened on the shaft 23 and pin 31 is withdrawn from the disk 27. The copy paper is then drawn up and secured to the roller 40, and the device is ready for use. The typewriter is operated in the usual manner and at each movement of the platen for line spacing the roller 40 will be rotated through the chain 46 and sprockets 45 and 47 to wind up the copy sheet. After the desired writing is completed the paper release lever of the typewriter will be depressed, thus removing the pressure from the sheets and permitting the carbon sheet to be automatically rewound on the roller 21. However, the stop pin will limit this return to position for making the next copy. The original copy is then torn off against the knife blade 51.

When the carbon becomes worn on the section in use, it is only necessary to lock the roller 21 to the shaft 23 by inserting pin 31 into disk 27 and release the shaft 23 by unscrewing set screw 24. The worn portion of carbon may then be pulled above the knife blade 51, and the ratchet and dog 34—36 reset to prevent the roller reversing beyond this point. The shaft 23 is then locked by tightening the set screw 24 and the pin 31 is withdrawn. The worn carbon is then torn off against the knife 51.

I claim:—

1. The combination with a typewriter having the usual body portion, carriage and rotary platen, of an automatic paper and carbon sheet supply mechanism supported on said carriage and adapted to supply original, copy and carbon paper to said typewriter, said mechanism comprising a frame member consisting of a pair of side members secured to said carriage and connected by a plurality of tie rods, a pair of paper supply rolls journaled in said side members, a copy windup and storage roll journaled in said side members and adapted to receive the copy paper after it has passed beyond said platen, means operated by said platen for rotating said windup roll, a carbon sheet supply roll journaled in said frame, said last named roll being adapted to automatically retract the carbon sheet after each writing upon the operation of the paper release mechanism of the typewriter.

2. The combination with a typewriter having the usual body portion, carriage and rotary platen, of an automatic paper and carbon sheet supply mechanism supported on said carriage and adapted to supply original, copy and carbon paper to said typewriter, said mechanism comprising a frame member consisting of a pair of side members secured to said carriage and connected by a plurality of tie rods, a pair of paper supply rolls journaled in said side members, a copy windup and storage roll journaled in said side members and adapted to receive the copy paper after it has passed beyond said platen, means operated by said platen for rotating said windup roll, a carbon sheet supply roll journaled in said frame, said last named roll being adapted to automatically retract the carbon sheet after each writing upon the operation of the paper release mechanism of the typewriter, and means carried by said frame adapted to sever the paper when desired.

3. In a typewriter attachment the combination of a supporting frame having a pair of side members spaced apart, means on said attachment for supporting at least one roll of paper, and means for severing said paper, said means comprising a U-shaped cutting member mounted on said side members so as to have a vertical, horizontal and angular adjustment relative thereto.

4. In a typewriter attachment the combination of a supporting frame having a pair of side members spaced apart, means on said attachment for supporting at least one roll of paper, and means for severing said paper, said means comprising a U-shaped cutting member having its side arms provided with elongated slots adjacent their free ends, supporting bolts passing through the elongated slots in said arms and through vertical slots in said side members, said cutting member being adapted to have a sliding movement on said bolts and to be rotated about said bolts, and said bolts being adapted to be moved vertically relative to said side members, so as to permit said cutting member to have a vertical, horizontal and angular adjustment relative to said side members.

In testimony whereof I have hereunto set my hand.

HAYES C. STEVENS.