(No Model.) 2 Sheets—Sheet 1.

A. J. & H. A. FOULDS.

STEAM ENGINE.

No. 408,704. Patented Aug. 13, 1889.

Fig. 1.

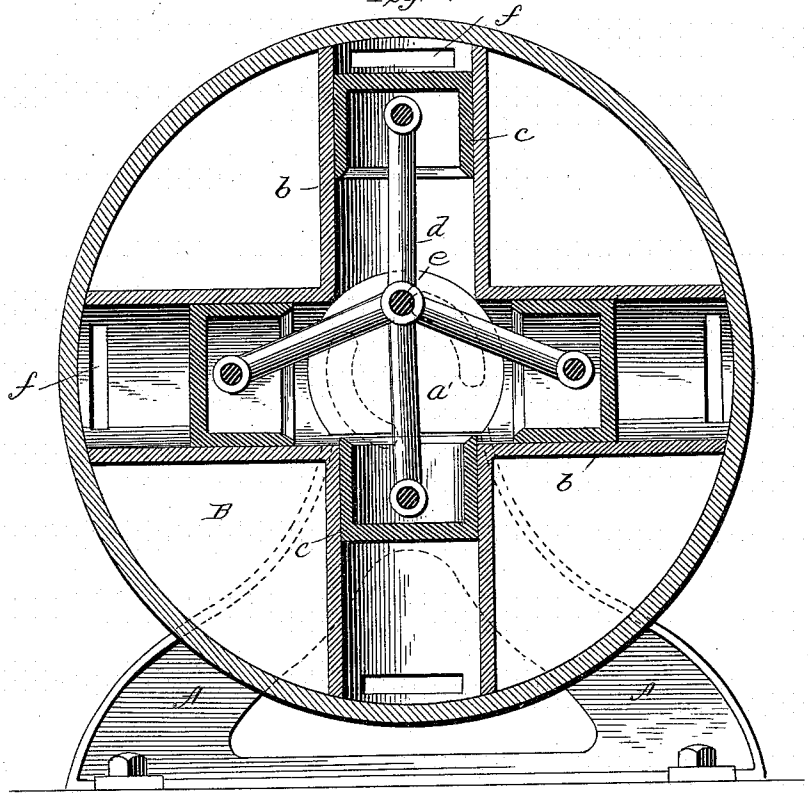

Fig. 2.

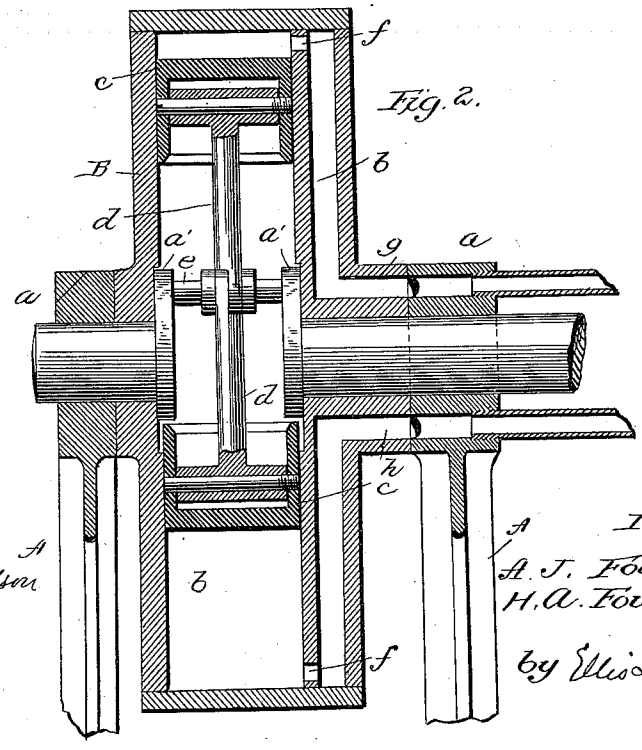

Attest
Walter Donaldson
F. L. Middleton

Inventors
A. J. Foulds
H. A. Foulds.
by Ellis Spear
Atty.

N. PETERS. Photo-Lithographer, Washington, D. C.

(No Model.) 2 Sheets—Sheet 2.

A. J. & H. A. FOULDS.

STEAM ENGINE.

No. 408,704. Patented Aug. 13, 1889.

Fig. 3.

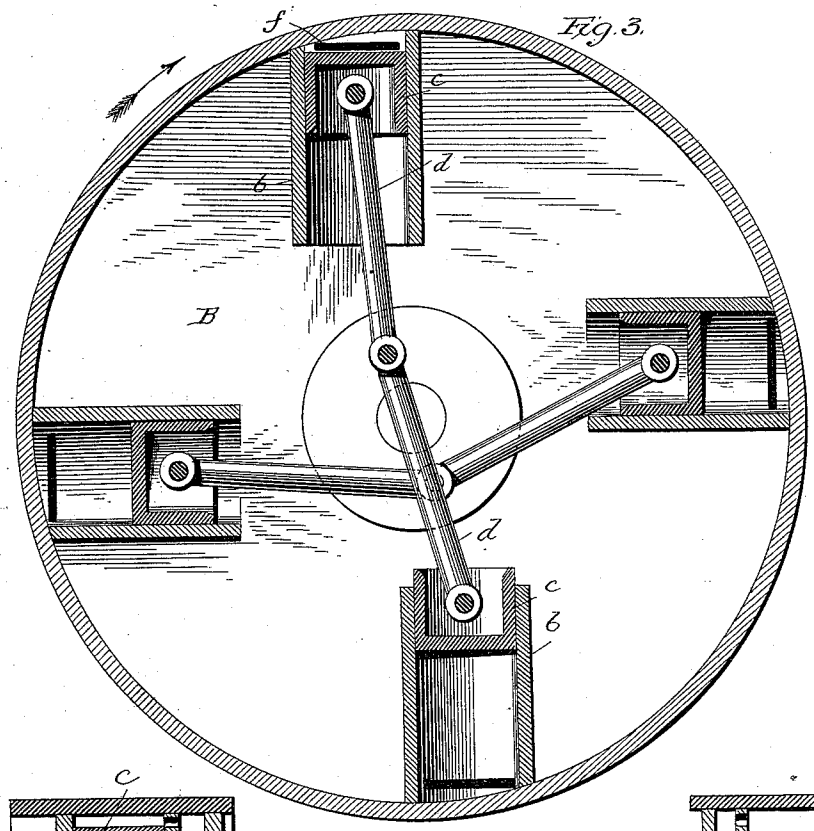

Fig. 5.

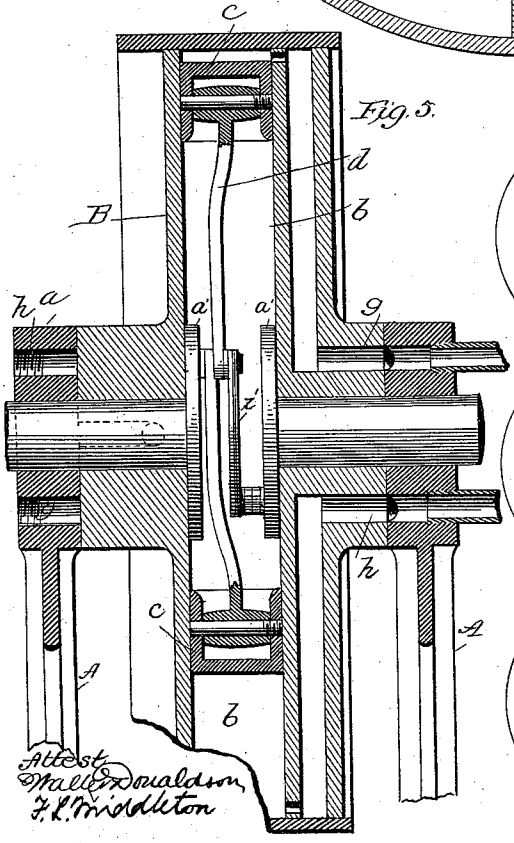

Fig. 6.

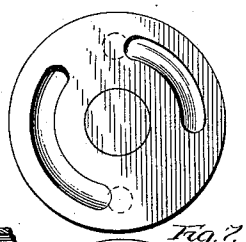

Fig. 7.

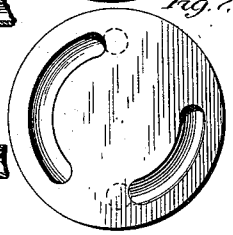

Fig. 8.

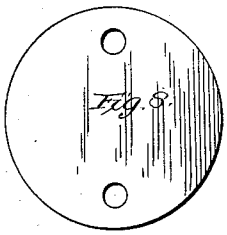

Fig. 4.

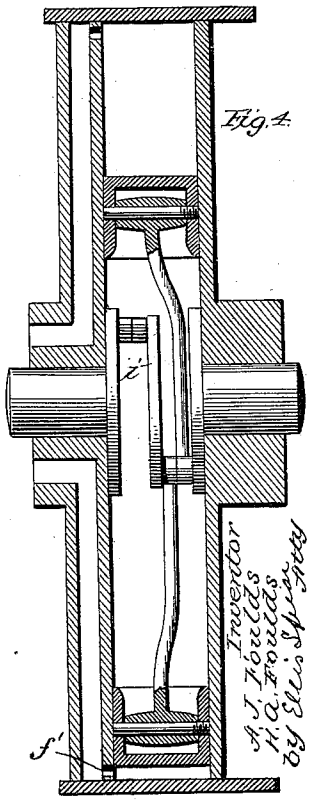

Witnesses
Walter Donaldson
F. L. Middleton

Inventors
A. J. Foulds
H. A. Foulds
by Ellis Spear & Co

N. PETERS. Photo-Lithographer, Washington, D. C.

UNITED STATES PATENT OFFICE.

ALFRED J. FOULDS AND HENRY A. FOULDS, OF PHILADELPHIA, PENNSYLVANIA.

STEAM-ENGINE.

SPECIFICATION forming part of Letters Patent No. 408,704, dated August 13, 1889.

Application filed October 8, 1888. Serial No. 287,591. (No model.)

To all whom it may concern:

Be it known that we, ALFRED J. FOULDS and HENRY A. FOULDS, of Philadelphia, in the county of Philadelphia and State of Pennsylvania, have invented a new and useful Improvement in Steam-Engines; and we do hereby declare that the following is a full, clear, and exact description of the same.

It is the object of our invention to provide a steam-engine of few parts, and consequently not liable to get out of order, of such construction as to be economical of manufacture, and which shall be adapted to all ordinary purposes for which a steam-engine is required, but by reason of its compactness be particularly desirable to run special machines, whether in shops or isolated. In this respect our invention will be found exceedingly useful and economical, as in cases where special machines are run at intervals only all extra shafting and belting thereto may be dispensed with, and our engine placed in position in proximity to the machine or in connection therewith, requiring only a steam-supply pipe and exhaust, and thus by simply turning a cock in the steam-supply pipe the engine may be put in action at will. The engine is also of such simple and compact construction that it may be made of very small size to operate toys and the like.

The engine relates to that class in which pistons are supported from a stationary shaft or shafts and the cylinders are carried by a revolving wheel; but in the present invention we have simplified this form of engine and greatly improved its general construction, with the result of increased efficiency.

In the drawings, Figure 1 is a vertical section through the wheel and cylinders of one form of our invention. Fig. 2 is a view of the same in vertical longitudinal section. Fig. 3 is a vertical section of another form, in which opposite cylinders are placed out of line. Figs. 4 and 5 represent vertical sections taken longitudinally of a modified form, Fig. 4 being a section through one set of cylinders and Fig. 5 through the other set, showing the induction and eduction passage to the same. Figs. 6 and 7 represent the elongated passage in the hub of the wheel in two positions. Fig. 8 is a view of the interior of the hub-standard, showing the induction and eduction ports.

In the drawings, the standards of the engine are shown at A A, of suitable size and material. These standards have bearings *a a* for the revolving wheel, which also serves as a fly-wheel. This wheel carries the cylinders *b b*, secured thereto or cast therewith, as may be found convenient, the said cylinders extending inward toward the center of the wheel, as shown in Figs. 1 and 2, or out of line therewith, as in Figs. 3, 4, and 5. The periphery of the wheel extends in an unbroken line around the cylinders and forms the outer ends thereof. When the cylinders and the wheel are cast together, the cylinders may be bored through the periphery and these openings in the periphery covered with caps or plugged flush with the wheel-face; or the cylinders may be cast with a part of the hub in one piece and open-ended and the periphery and spokes in one piece with the other part of the hub and the two parts placed together, and then the ends of the cylinders be covered by caps held in place by screws or bolts or in any other desirable manner. The wheel may have its hub extended on one or both sides to form a pulley or pulleys, from which a band or bands may be led to shafting or machine to be driven; or the power of the wheel may be communicated in any other desirable or well-known way.

Within the cylinders *b* are pistons *c*, properly packed, fitting said cylinders snugly, and rods *d* connect the pistons to a shaft *e*, fixed to the bearing-plates *a a* of the standard, placed off the center of the wheel. The rods are pivoted to the pistons and to the shaft, so as to allow each rod to freely assume the positions necessary in the complete revolution of the wheel. We prefer to make the wheel open between the cylinders, so as to lessen its weight. Each cylinder has a steam-passage along its side opening into the cylinder at the point *f*, as shown, and at the opposite end of the passage communicates with induction and eduction ports in the face of the standard-hub. This hub has a steam-passage on one side, as at *g*, and an exhaust on the opposite side at *h*.

The steam-port in the face of the wheel-hub is elongated, and as soon as a cylinder reaches a perpendicular position it begins to take steam, and the steam-port is of such size that it continues to take steam for about three-eighths of the revolution. For another eighth the revolution is aided by the expansion of the steam, and as the cylinder begins on the second half of its revolution it begins to exhaust until the elongated port passes entirely beyond the eduction-port in the standard-hub. It will be understood that the elongated ports serve both as induction and eduction ports. In Figs. 1 and 2 the cylinders of each pair are shown placed exactly opposite each other, while in Fig. 3 we show the cylinders of each pair placed out of line with each other. When they are thus out of line, a single supporting-shaft may connect the inner ends of the rods, as before described, and shown in Figs. 1 and 2; but we prefer in this case to provide a shaft for each set, as shown in Figs. 3, 4, and 5. In these figures four cylinders are shown with two supporting-shafts for the piston ends. These shafts, as shown in Figs. 4 and 5, extend only one-half of the distance between the bearing-plates, a supporting plate or disk being interposed between the inner ends of the two shafts, as shown at *i*. The rods of opposite cylinders are connected to one shaft, the ends being bent for the purpose, and the rods of the other cylinders, in a like manner, are connected to the second shaft.

By providing independent crank rods or shafts for each pair of cylinders, as shown in Fig. 3, we secure a balance to the engine which is not obtained when the piston-rods of all the cylinders are connected to a single crank, as it is obvious that when they are all so connected there is a torsional twist upon the parts which manifests itself in the irregular wearing of the bearings, while in the construction shown in Fig. 3 the crank-pins are diametrically opposite and a perfect balance is secured. When two crank-pins are used—one for each pair of piston-rods—we prefer to take the steam for one pair of cylinders from one side and the steam for the other pair of cylinders from the opposite side, as more clearly shown in Figs. 4 and 5. The construction of the parts is substantially the same, the only difference being that the two cylinders of one pair have their steam-passages on one side—say to the left, as shown in Fig. 4—while the cylinders of the other pair have their steam-passages on the right, as in Fig. 5, these passages being adapted, by means of their elongated ports, to register with the respective steam and exhaust openings on one side or the other. With this construction not only, as we have stated, do we secure a more perfect balance than in the form where the piston-rods are all connected to a single crank-pin, but we also secure added power. It is true that we do not utilize any larger amount of steam than in the simple form, as each cylinder in both forms takes steam once during a revolution; but while in the simple form of engine steam is taken from one port as each cylinder passes that port, in the form shown in Figs. 3, 4, and 5 two ports are provided diametrically opposite each other, so that while the live steam is being admitted to the upper cylinder of Fig. 3 the next quarter-turn will bring one of the cylinders of the next pair to the steam-port on the other side, and this cylinder will receive its impulse from the live steam from a point directly opposite that at which the cylinder following it has taken steam, and in this way it will be seen that live steam is taken from both sides, which adds to the balance of the engine, and further provides for the admission of the live steam at diametrically-opposite points, instead of simply at one point, and as the admission of the live steam at the opposite side acts at a time when the steam admitted at the first port is at full head greater power is secured. Instead of having the ports in the standard-hub, the supporting-shaft may be made hollow for this purpose.

Having thus described our invention, what we claim is—

1. A steam-engine consisting of a wheel, cylinders carried thereby extending inwardly eccentrically, pistons in the said cylinders, rods having pivoted connections with the pistons, and a stationary shaft for the ends of each pair of rods of opposite cylinders, said rods having a pivoted connection at each end, substantially as described.

2. A steam-engine consisting of a wheel, cylinders carried thereby, pistons within the same, two stationary shafts having a supporting-plate *i* between them, the said shafts being placed eccentrically to the center of the wheel, and rods from the pistons to the shafts, the rods of oppositely-placed cylinders being pivoted on the same shaft, substantially as described.

3. A steam-engine consisting of a wheel, cylinders carried thereby, pistons within the same, a stationary shaft for each pair of pistons, piston-rods pivotally connected between the stationary shafts and their pistons, and induction and eduction ports at one side for the cylinders of one pair and like ports on the other side for the cylinders of the other pair, substantially as described.

In testimony whereof we have signed our names to this specification in the presence of two subscribing witnesses.

ALFRED J. FOULDS.
HENRY A. FOULDS.

Witnesses:
R. W. MYERS,
W. S. Y. MYERS.