United States Patent [19]

Holland et al.

[11] **3,912,049**

[45] **Oct. 14, 1975**

[54] **INTERLOCK FOR CENTER OPENING DOORS**

[75] Inventors: **Gordon A. Holland; Gilbert T. Adams,** both of Memphis, Tenn.

[73] Assignee: **Dover Corporation,** Memphis, Tenn.

[22] Filed: **Oct. 26, 1973**

[21] Appl. No.: **410,201**

[52] **U.S. Cl.** **187/61;** 49/123; 187/57

[51] **Int. Cl.**[2] **B66B 13/16**

[58] **Field of Search** 187/30, 31, 49, 51, 52, 187/56, 57, 58, 59, 61, 48, 50; 49/116, 118, 280, 370, 120–123

[56] **References Cited**

UNITED STATES PATENTS

1,823,962	9/1931	Walker et al.	187/52
2,517,713	8/1950	Rissler	187/31
2,659,457	11/1953	Doeg	187/59
2,936,046	5/1960	Jecmen	187/59
3,065,826	11/1962	Tucker	187/52
3,315,767	4/1967	Walter	187/57
3,605,952	9/1971	Lusti	187/51

Primary Examiner—Evon C. Blunk
Assistant Examiner—James L. Rowland
Attorney, Agent, or Firm—Brumbaugh, Graves, Donohue & Raymond

[57] **ABSTRACT**

An interlock for center opening elevator hoistway doors, in which one door is powered and the other door is operated by a cable from the powered door, has an interlock switch operated by the powered door to prevent the elevator car from leaving the landing before the hoistway doors are closed. When the idle door is open, a tab connected to a spring loaded pivoted lever swings into a position underlying the interlock to prevent the interlock hook from dropping into position to close the interlock switch. When the idle door closes, a cam mounted on the idle door engages a cam follower on the lever and rotates the lever tab clear of the interlock hook, simultaneously swinging a latch connected to the lever into a catch mounted on the cam so that the idle door is securely locked in closed position once the interlock hook drops into position to lock the powered door.

13 Claims, 8 Drawing Figures

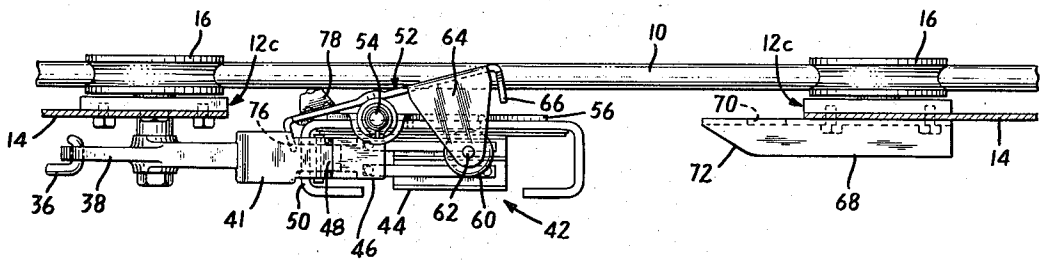

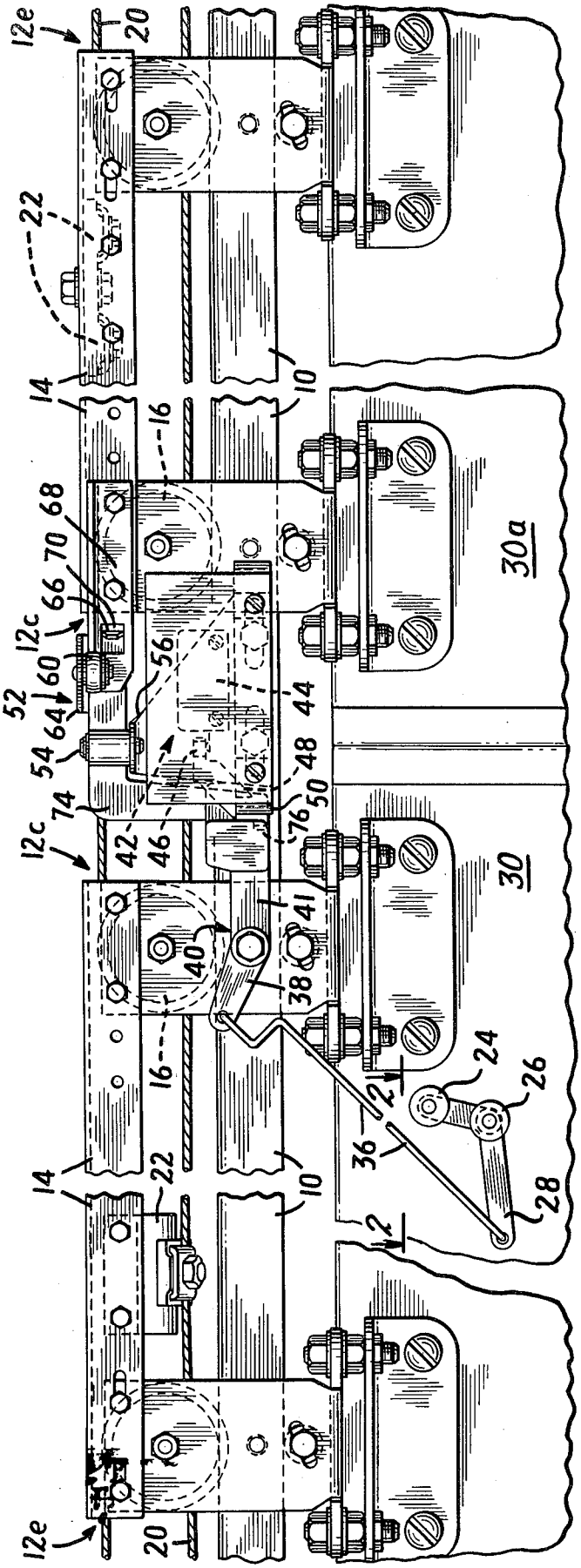
12e
20
22
14
16
10
68
70
66
12c
60
52
64
54
56
44
48
50
76
74
42
46
41
40
38
30a
30
24
26
36
28
2
12e
20

FIG. 1

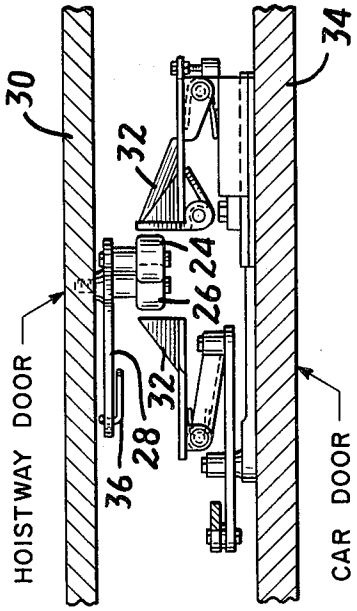
30
32
34
24
26
32
28
36
HOISTWAY DOOR
CAR DOOR

FIG. 2

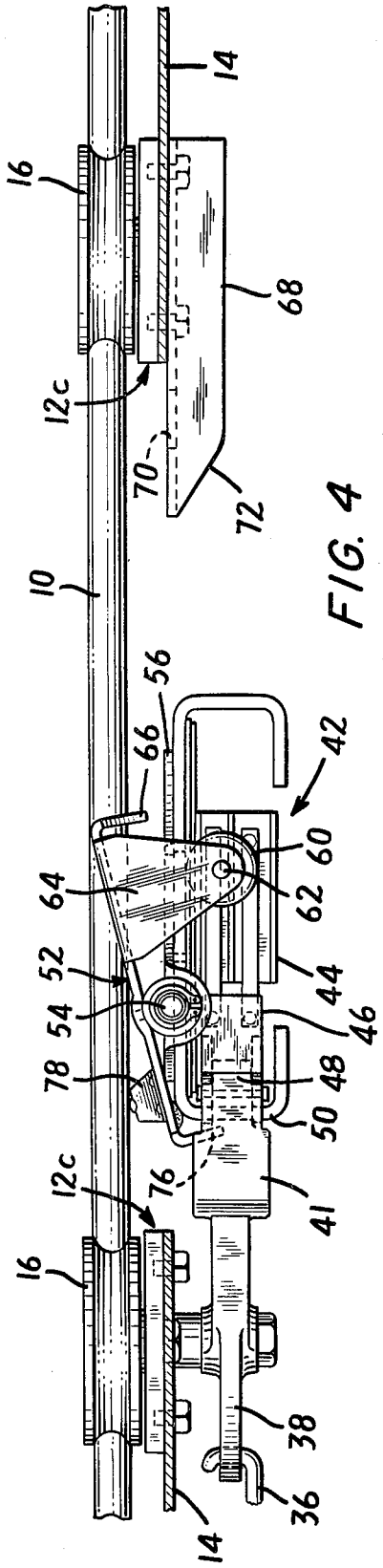
16
14
68
12c
70
72
10
56
66
42
60
62
64
52
54
44
46
78
48
50
12c
76
41
16
38
36
14

FIG. 4

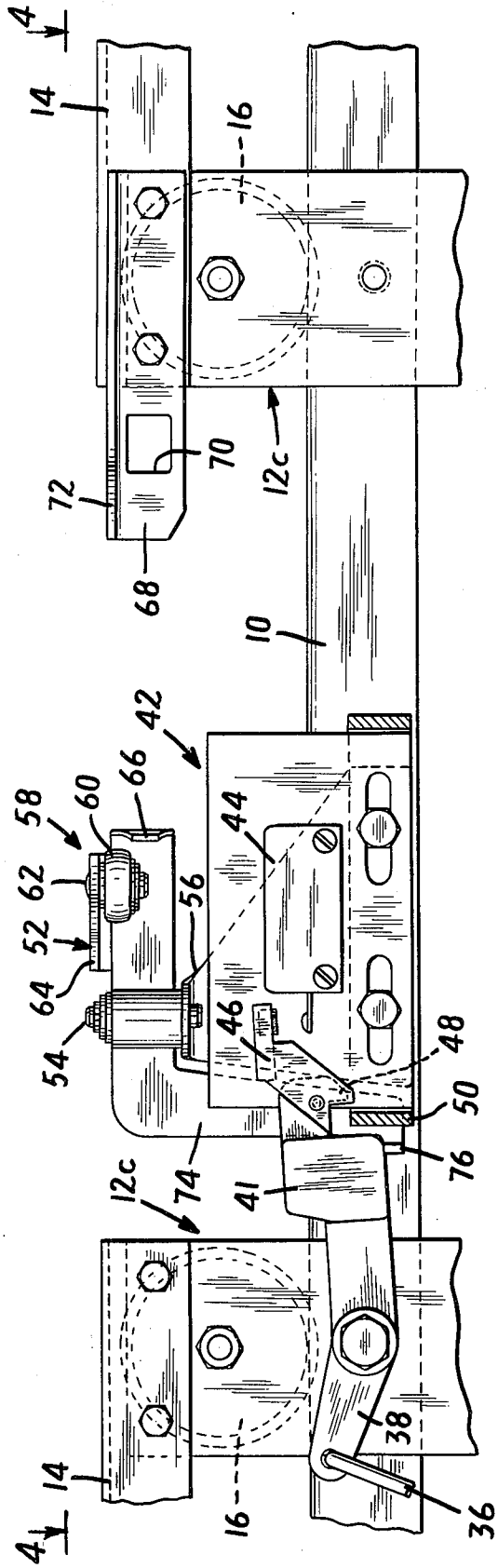
4
14
16
70
12c
72
68
10
42
66
58
60
44
62
56
52
64
54
46
48
50
76
12c
74
41
14
38
16
36
4

FIG. 3

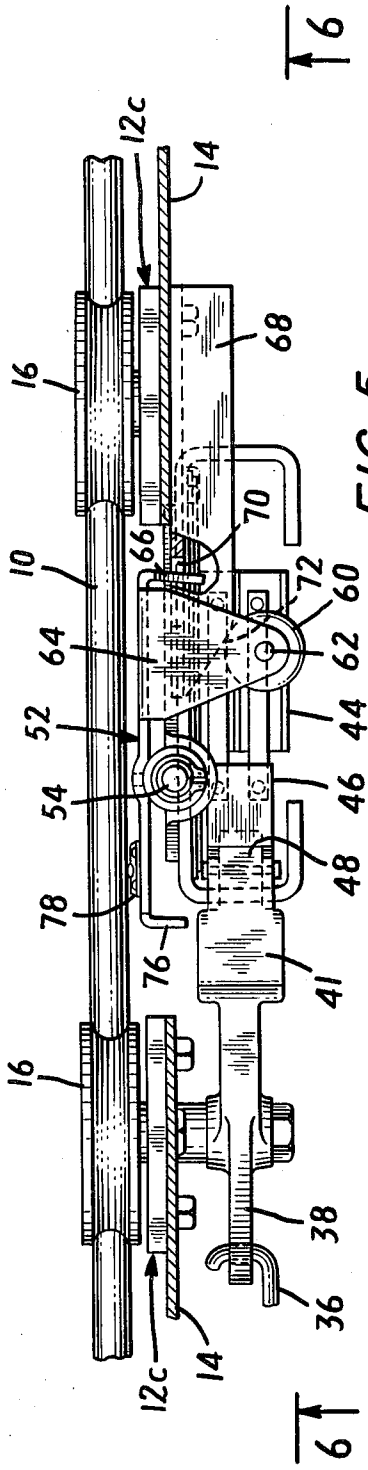
6
12c
14
16
68
10
66
70
72
60
64
62
52
44
54
46
48
78
76
41
16
38
36
12c
14
6

FIG. 5

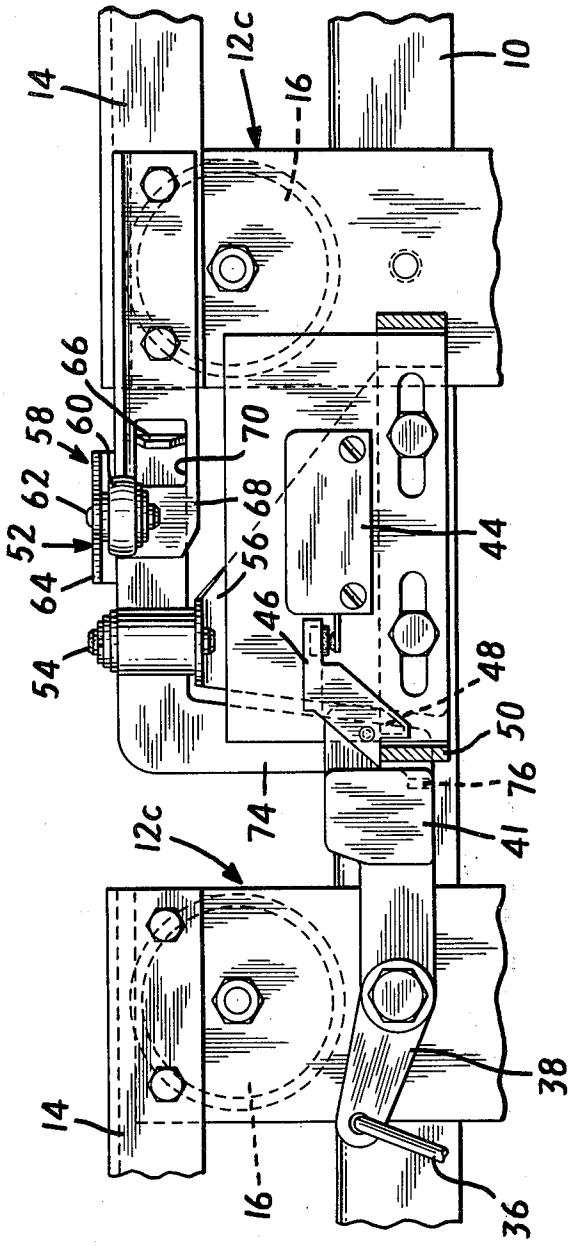
14
12c
16
10
66
60
58
70
62
52
68
56
44
64
46
54
48
50
76
74
41
12c
38
14
16
36

FIG. 6

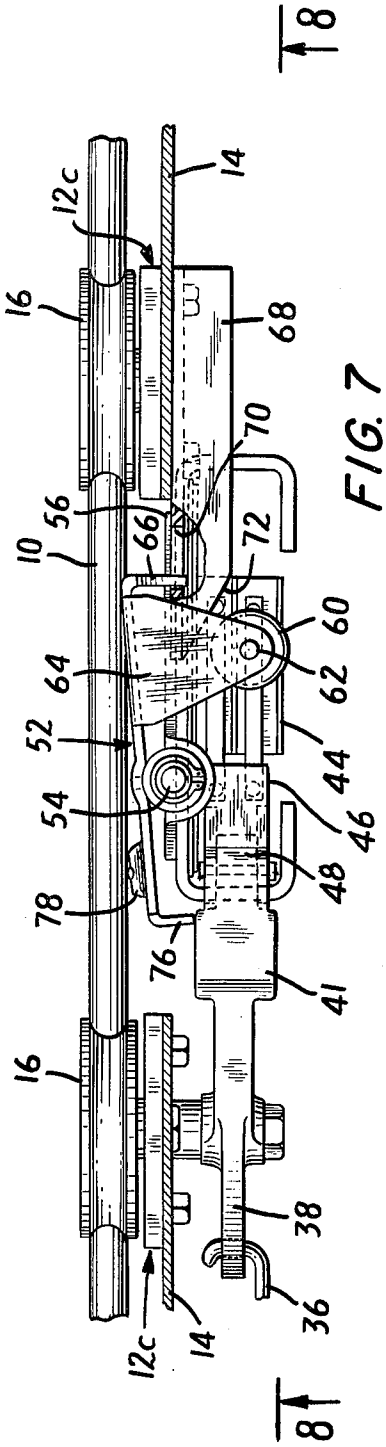
8
12c
14
16
68
70
56
66
72
10
60
62
64
52
44
54
46
48
78
76
41
16
38
36
12c
14
8

FIG. 7

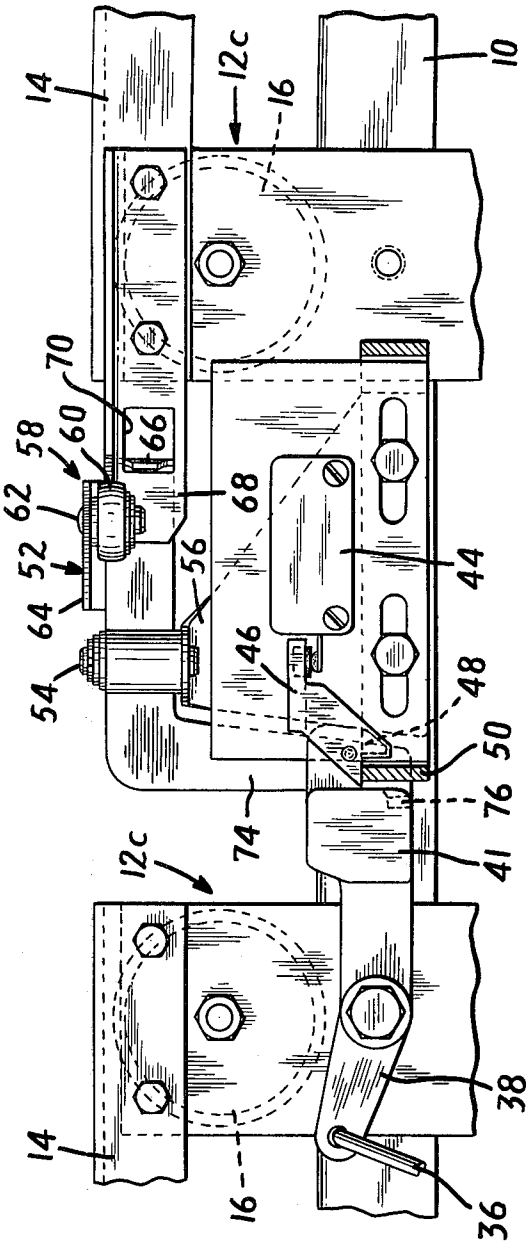
14
12c
16
10
70
58
60
66
62
68
52
56
44
64
46
54
48
50
76
74
41
12c
38
14
16
36

FIG. 8

INTERLOCK FOR CENTER OPENING DOORS

BACKGROUND OF THE INVENTION

This invention relates to door interlocks, and especially to an interlock for center opening elevator hoistway doors.

In elevator systems having center opening hoistway doors, one arrangement for operating the hoistway doors is by means of vanes carried by each panel of the car door. At the landings, the car door vanes engage rollers on the two hatchway door panels to unlock and power each panel of the hatchway door independently. Each panel of the hatchway door is therefore a "powered" panel, and each is supplied with its own interlock.

Although this arrangement is safe enough, it suffers from a high initial cost, since most of the interlock system is in duplicate. Moreover, it requires increased maintenance and presents an increased likelihood for misadjustment because of the amount of extra equipment. Finally, there is an increased likelihood of contact failure, since the number of switches in series has been doubled.

Another more common practice is to operate one of the hoistway doors by engagement of the motor driven elevator car door with one of the hoistway doors. The other, or idle hoistway door, is operated by means of a linkage between the powered hoistway door and the idle hoistway door. One particularly effective manner of relating the two hoistway doors is by means of a cable trained around a pair of pulleys on opposite sides of the hoistway door opening. The powered hoistway door, connected to the cable, drives the cable; the idle hoistway door, likewise connected to the cable, is operated by the cable.

To prevent the hoistway doors from opening when the elevator car is away from the landing, the powered hoistway door is provided with an interlock lever-arm, which includes a hook and a switch shorting bar. When the car is at the landing, the hoistway door operating mechanism on the car door lifts the interlock arm which opens the interlock switch and then disengages the interlock hook from its catch. Unlatched, the hoistway door can be opened and the open switch prevents the elevator car from moving until the interlock is closed. As the elevator car door closes, it simultaneously closes the hoistway doors, whereupon the hoistway door operating mechanism on the car door disengages from the hoistway door to latch the interlock hook and close the interlock switch. The hoistway doors are thus locked and prevented from opening and the car is enabled to leave the landing.

While this second system works well, a potentially unsafe condition could occur should the cable relating device interconnecting the powered hoistway door with the idle hoistway door fail in some way. It might then be possible for the powered hoistway door to close, the interlock hook to latch, and the switch to close, thereby enabling the elevator car to leave the landing, while the idle hoistway door remained unlatched.

Similarly, if the cable relating device failed while the elevator car was away from the landing, it might be possible to open the unlatched idle hoistway door by hand, thus creating an unsafe condition.

SUMMARY OF THE INVENTION

It is therefore an object of this invention to provide

a center opening door safety which will securely lock both doors when the interlock is closed and permit opening of the doors only when the interlock is opened.

Another object of this invention is to provide a true interlock device for both doors with the addition of only a few simple, rugged and reliable parts and without increasing the number of electrical contacts.

A further object of this invention is to provide an interlock system for center opening elevator doors which will allow the elevator to continue to give service to all landings in a building in spite of a failure in the relating device, without compromising the safety of the interlock system.

These and other objects of the invention are achieved by providing position responsive means including a lever operated by the idle door and swingable between a position in which it blocks the closing of the interlock hook and a position in which it permits the closing of the interlock hook and simultaneously engages a catch on the idle door to prevent the idle door from opening when the interlock hook is engaged.

DESCRIPTION OF THE DRAWINGS

This invention, along with its many attendant advantages and benefits, will become better understood by reading the following detailed description of a preferred embodiment with reference to the following drawings, wherein:

FIG. **1** is an elevation of the interlock and supporting mechanisms for a pair of center opening hoistway doors;

FIG. **2** is a plan view along lines **2—2** in FIG. **1**;

FIG. **3** is an elevation showing the idle door in open position and the powered door in closed position but with the interlock hook arm held in raised or open position;

FIG. **4** is a plan view along lines **4—4** in FIG. **3**;

FIG. **5** is a plan view similar to FIG. **4** but with the idle door closed and latched and the cable relating device operating normally;

FIG. **6** is an elevation along lines **6—6** in FIG. **5**;

FIG. **7** is a plan view similar to FIG. **5**, but with the cable relating device failed; and

FIG. **8** is an elevation along lines **8—8** in FIG. **7**.

DESCRIPTION OF THE PREFERRED EMBODIMENT

Referring now to the drawings wherein like reference characters designate identical or corresponding parts and more particularly to FIG. **1** thereof, a portion of a center opening elevator hoistway door arrangement is shown having a hanger track **10**, supported by the building walls, extending laterally across the top of the hoistway opening. Each of a pair of hoistway doors is supported for horizontal movement along the hanger track **10** by a truck including two spaced hanger assemblies **12*e*** and **12*c***, connected by a horizontal brace **14**. Each hanger assembly includes a wheel or roller **16** which rolls on the hanger track **10**, by means of which the hoistway doors are supported for horizontal movement transversely of the door opening.

A pulley (not shown) is connected to each end of the hanger track **10** and a cable **20** is trained around both pulleys and extends across the top of the hoistway door opening. A clamp **22** secured to each of the horizontal braces **14** connects the cable **20** to each of the hoistway doors.

Referring now to FIG. 2, two rollers 24 and 26 are pivotally connected to a bell crank 28, which, in turn, is pivotally connected to one of the two hoistway doors, hereinafter referred to as the powered door 30. The elevator car door 34 carries a pair of door operating vanes 32 which extend vertically on both sides of the rollers 24 and 26 when the elevator car is aligned with a hositway entrance. When the elevator car door opening mechanism is energized, the door operating vanes 32 close on the rollers 24 and 26 to rotate the bell crank 28, shown in FIG. 1, in a counterclockwise direction.

A rod 36 extends from the bell crank 28 to an operating arm 38 of an interlock lever 40 pivotally mounted on the center hanger assembly 12c supporting the powered hoistway door 30. The other arm 41 of the interlock lever 40 engages and operates an interlock catch and switch assembly 42, fastened centrally to the hanger track 10. An interlock switch 44 is wired to the elevator control mechanism in such a way that if any interlock switch at any floor in the system is open, the elevator car drive mechanism cannot operate. In other words, before the elevator hoist machine can be activated, the interlock switch 44 at each floor in the system must be closed.

The hook arm 41 of the interlock lever 40 includes a switch shorting bar 46 which completes the electrical circuit of the switch 44 when the interlock lever is in its closed and locked position. When the door operating vanes 32 on the elevator car door close on the rollers 24 and 26 on the bell crank 28, it rotates counterclockwise and, by way of the rod 36, pulls down on the interlock lever operating arm 38 which rotates the hook arm 41 counterclockwise about its pivot to lift the switch shorting bar off the contact fingers of the interlock switch 44, thereby opening the circuit in the elevator control and also disengaging the hook 48 from the catch 50 to unlock the hoistway door and permit its opening by the door operating vanes 32 on the elevator car door.

Since only the powered hoistway door 30 carries the interlock hook, it is desirable to have some means associated with the other hoistway door, hereinafter referred to as the idle door 30*a*, to prevent its opening should the cable 20 lose control of the idle door 30*a*, as would happen if the cable broke, became distrained from the pulleys, or if either of the clamps 22 between the hoistway doors and the cable failed in some manner.

To provide an interlock for the idle door, a locking lever 52 is pivotally mounted on the hanger track 10 above the interlock catch and switch assembly 42. The locking lever 52 and the hook arm 41, as will appear more fully below, will latch the idle door in closed position when the interlock is closed, and will allow unlatching of the idle door only when the interlock switch 44 is open. This device ensures that neither hoistway door can open until the elevator car is at the landing, and ensures that the elevator car cannot leave the landing until both hoistway doors are securely latched shut.

Looking now at FIG. 3, the locking lever 52 is shown mounted on a pintle 54 which, in turn, is welded to a plate 56 bolted to the hanger track 10 under the interlock catch and switch assembly 42. A cam follower 58 is mounted on the locking lever 52 near one end. The cam follower includes a roller 60 rotatably mounted on a roller pintle 62 welded to a leaf 64 projecting forwardly from the locking lever 52 and overhanging the interlock catch and switch assembly.

The extreme end of the locking lever 52 adjacent the cam follower is bent forwardly normal to the locking lever 52 to provide a latch 66 for the idle hoistway door.

A latch plate 68 is fastened to the upper portion of the center hanger assembly 12*c* of the idle door. The latch plate 68 is a short length of angle iron having, in its vertical side, a rectangular opening 70 which is horizontally aligned with the latch 66 on the locking lever 52. A cam face 72 is formed on the horizontal side of the latch plate 68 extending diagonally from the vertical side forwardly and to the right as shown in FIG. 4. When the idle door closes toward the center (to the left as shown in FIGS. 3 and 4) the cam face 72 engages the roller 60 pivotally mounted on the locking lever 52 and pivots the locking lever 52 clockwise, in FIG. 4, about the locking lever pintle 54. As the locking lever 52 swings clockwise, the latch 66 enters the opening 70 in the vertical side of the latch plate 68, thereby securing the idle door against opening until the locking lever 52 is again pivoted counterclockwise to disengage the latch 66 from the opening 70.

Looking now at FIGS. 5 and 6, as the hoistway doors near their closed position, the cam face 72 engages the roller 60 and pivots the locking lever clockwise. The pivoting locking lever 52 swings the latch 66 into the opening 70 in the latch plate 68, and simultaneously carries the tab 76 clear of the interlock hook arm 41. Further closing motion of the elevator car doors cause the operating vanes to disengage from the rollers 24 and 26, causing the hook arm 41 to rotate clockwise and cause hook 48 to engage the catch 50. Both the powered door 30 and idle door 30*a* are now securely latched in shut position and the switch 42 is closed, enabling the elevator hoistway machine to be actuated.

Looking now at FIGS. 7 and 8, assume that the cable relating device has failed in some way and someone in the hall is exerting an opening force on the idle hoistway door 30*a*. The idle hoistway door 30*a* cannot open with the latch 66 engaged in the opening 70 in the latch plate 68, and, as shown in FIG. 4, the locking lever 52 must pivot to its full counterclockwise position to disengage the latch 66 from the opening 70 in the latch plate 68. As shown in FIGS. 7 and 8, however, the locking lever 52 is prevented from pivoting counterclockwise to unlatch the idle door when the hook arm 41 is in latching position, by a tab 76 on a rocker arm 74 which depends from the left arm of the locking lever 52. The rocker arm 74 extends down behind the interlock hook arm 41 and the tab 76 projects forwardly from the lower end of the rocker arm 74, against the interlock hook arm 41 when the interlock is in closed position. Before the locking lever 52 can pivot counterclockwise about its pintle 54, the hook arm 41 must be raised, opening the interlock switch 44 and disengaging the interlock hook 48 from the catch 50. After the interlock hook 48 has been lifted and the idle door panel begins to open, a spring 78 secured to the left arm of the locking lever 52 swings the locking lever 52 counterclockwise about its pintle 54, withdrawing the latch 66 from the opening 70 in the latch plate 68 to unlatch the idle door.

When the cable relating device or the idle door jams so that it cannot close, the locking lever 52 remains in its extreme counterclockwise position and the tab 76

remains extending under the hook arm **41**. In this condition, the hook arm **41** cannot drop so the switch **44** remains open and the elevator car is prevented from leaving the landing. If it is possible to free the jam, the idle door will close under its spring or gravity closer, whereupon the interlock will close normally, securely locking both hoistway doors and permitting the elevator to continue operating in full safety. The car will continue to serve all floors in the building, including the floor where the relating cable has failed. At this floor, only the powered door will open automatically although the idle door can be opened manually.

With the use of this invention, the elevator car operating mechanism can be energized only when both hoistway doors are safely latched, and neither hoistway door can be opened until the elevator car has arrived at its landing. The potentially dangerous situation that would occur if the hoistway door cable relating device failed and the idle hoistway door were opened to expose an empty elevator shaft is obviated by this invention with only a few easily manufactured and reliable mechanisms. This invention accomplishes an improved and more positive, direct interlock of both door panels, yet retaining substantially the same economy and simplicity of the original cable relating center opening door operating mechanism. It also functions more reliably than the independently operated center opening doors, while providing all the safety features thereof.

Various modifications of the disclosed embodiment are contemplated. For example, a catch could be added to the idle door and the hook arm **41** could be elongated and provided with a second hook to engage the catch on the idle door. The function of the latch **66** would then be performed by the elongated hook arm and the latch **66** could be dispensed with. Other modifications and variations of the disclosed embodiment of this invention are also possible and it is expressly to be understood that the invention may be practiced otherwise than as specifically shown while remaining within the spirit and scope of the appended claims.

We claim:

1. In a center-opening door system having a powered door; an idle door operated by the powered door; an interlock hook for latching the powered door; and a switch operated by the interlock hook, the improvement comprising:

a movable member having formed thereon a tab and a latch;

a cam follower operatively connected to said movable member;

a cam connected to said idle door and aligned with said cam follower for moving said movable member in one direction;

a catch connected to said idle door and engageable by said latch when said movable member is moved in said one direction; and

means for moving said movable member in the opposite direction when said cam withdraws from said cam follower;

said movable member being movable between a first position in which said tab occupies a position blocking movement of said interlock hook to the latching position thereof, and in which said latch is clear of said catch; and a second position in which said tab is clear of the path of travel of said interlock hook, and in which said latch extends into said catch.

2. An interlock for center opening doors as defined in claim **1**, wherein said cam follower is mounted directly on said movable member.

3. An interlock for center opening doors as defined in claim **1**, wherein said movable member includes a lever pivotally mounted on a pintle which is rigidly mounted in a stationary position with respect to the opening controlled by said doors.

4. An interlock for center opening doors as defined in claim **1**, wherein said catch comprises an opening in said cam, and said cam follower is mounted directly on said movable member.

5. An interlock for center opening doors as defined in claim **1**, wherein said movable member includes a lever pivoted intermediate its ends, and said tab is formed on said lever adjacent one end thereof, and said latch is formed on said lever adjacent the other end thereof.

6. An interlock for center opening doors as defined in claim **5**, wherein said cam follower is mounted directly on said lever.

7. An interlock for center opening doors as defined in claim **5**, wherein said catch comprises an opening in said cam, and said cam follower is mounted directly on said lever.

8. An interlock for center opening doors as defined in claim **1**, wherein said movable member moving means comprises biasing means urging said movable member to move in said other direction.

9. An interlock for center opening doors as defined in claim **8**, wherein said movable member includes a pivoted lever and biasing means includes a leaf spring connected to said lever.

10. An interlock for center opening doors as defined in claim **8**, wherein said catch comprises an opening in said cam, and said cam follower is mounted directly on said movable member.

11. An interlock for a center opening door system having a powered door and an idle door operatively connected to the powered door by way of a relating means, comprising:

means independent of said relating means for latching both doors, including an interlock hook for latching one of the doors,

an interlock switch operated by the interlock hook, and

position responsive means operable as a function of at least the position of the other door to prevent the interlock hook from closing the interlock switch unless both of said doors are closed and latched by said latching means.

12. The interlock for center opening doors as defined in claim **11**, wherein said position responsive means enables both doors to be latched if the other door is closed, and prevents either door from being latched if the other door is not in the closed position.

13. The interlock for center opening doors as defined in claim **12**, wherein said position responsive means includes a lever pivoted by said other door to a position clear of said interlock hook when said other door is closed.

* * * * *