Nov. 4, 1924. 1,514,166

R. C. MORGAN ET AL

METHOD OF ASSEMBLING TUBES AND LINERS IN GUN MANUFACTURE

Filed Jan. 11, 1922

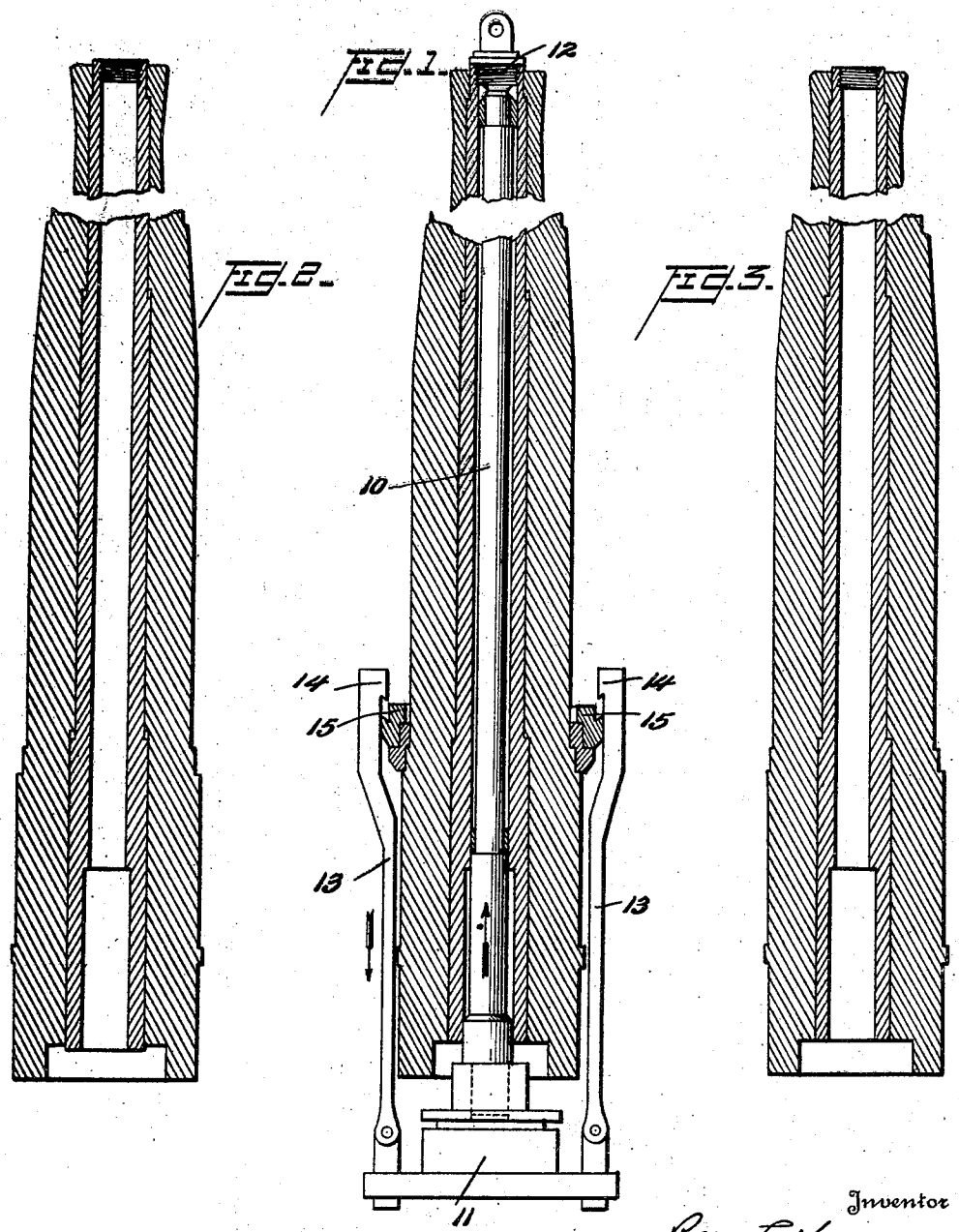


Inventor
Rees C. Morgan,
John F. Kelly,
By Watson, Cole, Moore & Grindle,
Attorney

Patented Nov. 4, 1924. 1,514,166

# UNITED STATES PATENT OFFICE.

REES C. MORGAN AND JOHN F. PELLY, OF BETHLEHEM, PENNSYLVANIA, ASSIGNORS TO BETHLEHEM STEEL COMPANY, OF BETHLEHEM, PENNSYLVANIA, A CORPORATION OF PENNSYLVANIA.

## METHOD OF ASSEMBLING TUBES AND LINERS IN GUN MANUFACTURE.

Application filed January 11, 1922. Serial No. 528,572.

*To all whom it may concern:*

Be it known that we, REES C. MORGAN and JOHN F. PELLY, citizens of the United States, and residing at Bethlehem, Lehigh County, State of Pennsylvania, respectively, have invented certain new and useful Improvements in Methods of Assembling Tubes and Liners in Gun Manufacture, of which the following is a specification.

It has heretofore been a standard practice in assembling liners in guns of large caliber to employ the shrinkage method, in which the liner, which has an outside diameter greater than the inside diameter of the cylinder or tube into which it is to be placed, is kept in a relatively cool condition while the tube is expanded by heat until its inner diameter is such that it may be readily dropped over the liner, which has been previously coated with a lubricant. As the tube cools it contracts and firmly grips the liner, compressing the same, and shortening its inner diameter. The amount of this shortening is known as the "compression" caused by the assembling operation. In gun manufacture it is requisite that this compression be within certain limits, corresponding to certain compressive unit stresses in the wall of the liner.

The amount of this compression is not only dependent upon the "shrinkage allowance," which is the amount by which the outer diameter of the liner exceeds the original inner diameter of the outer tube or cylinder, but is also affected by the manner in which the two concentric cylinders become frictionally bound together in the shrinkage process. It has been found that in manufacturing guns, particularly guns of large caliber, that rarely two guns when assembled have the same amount of compression although the dimensions and shrinkage allowances of the original cylinders were the same in each case. This undesirable uncertainty in the compression obtained is, for a given quality of steel, partly because of the tendency of the tube or outer cylinder to contact longitudinally as well as radially and to therefore grip and simultaneously contract the liner both radially and longitudinally. This longitudinal contraction of the liner affects the radial compression thereof in a manner and to a degree which cannot be accurately estimated beforehand.

It is an object of this invention therefore to provide a method of assembling liners in tubes by shrinkage in which the longitudinal shortening of the liner and the resulting longitudinal compression stresses therein are largely avoided. This object is accomplished by adding as a new step to the ordinary shrinkage process a step which involves the positive holding of the liner against longitudinal contraction in assembling so that the contracting tube or outer cylinder firmly grips as it cools, a liner the length of which cannot be shortened as the tube shortens in cooling, which would otherwise be the natural result, the tube being universally thicker and stronger and well able to overcome the resistance of the liner. In guns assembled by this new method longitudinal contraction or longitudinal compressive stresses in the liner are avoided or rendered negligible and the "compressions" actually obtained are more nearly equal to the theoretical "compressions" desired.

In carrying out the method in actual practice it has been found advantageous to not only positively prevent the liner from being longitudinally contracted by the tube but to actually stretch the liner by power means and the invention contemplates broadly therefore the method of assembling in which the desired ultimate bore compressions are obtained by preventing longitudinal contraction of the liner as the tube contracts, whether the liner is or is not subjected to tension.

It is practically a universal practice also in manufacturing large caliber guns to form the liner with forwardly facing annular shoulders at one or more points along its outer surface and these forwardly facing shoulders fit against, when the assembly has been completed, corresponding rearwardly facing annular shoulders on the interior wall of the tube or outer cylinders. The abutting shoulders constitute means for preventing creeping of the liner toward the muzzle end in firing, under the action of the projectiles passing therethrough. In spite of most careful heating and assembling it has been found in practice extremely difficult to firmly seat the corresponding shoulders of the tube and liner so that they finally occupy the correct relative position. Difficulties of this character are increased when a plurality of pairs of such shoulders are to be seated, as in large

caliber guns, the non-seating of the shoulders being caused by the gripping of the liner by the contracting tube first at points distant from and in front of, the shoulders, for instance, near the muzzle end, it being obvious that if the two cylinders should first bind together near the muzzle end that as the tube contracts longitudinally the corresponding shoulders will become more and more separated instead of being forcibly driven together.

It is a further object of this invention therefore to provide a method whereby the corresponding shoulders of the cylinders can be truly seated during the assembly of the gun, after which they are maintained in seated position by the tremendous frictional grip of the outer cylinder on the inner. In this manner the desired restraining force is exerted on the inner cylinder by the outer at each shoulder, thus preventing overstraining at one section.

This object is accomplished by exerting a force at or near the muzzle end of the liner tending to draw it forwardly and simultaneously exerting a force upon the heated and expanded tube tending to move the same in the opposite direction, these oppositely directed forces tending to bring the corresponding shoulders of tube and liner into firm engagement. When the tube has cooled the two cylinders will be frictionally gripped together with the corresponding shoulders in abutment.

Another object of the invention is to provide a method of assembling which results in a firmer frictional engagement between the cylinders so that they are prevented from rotating relatively to each other, which often occurs in large caliber guns due to the tangential force exerted by the projectile due to the rifling. This effect is realized by omitting to lubricate the contacting surfaces of the tube and liner for a considerable distance near the muzzle ends thereof and by utilizing power means in assembling to overcome the resistance occasioned by the lack of lubricant, to bring the cylinders into proper relative position. When the assembly is completed the cylinders will resist the tendency toward relative rotation much more strongly than when lubricant is present at this section. By the use of power means an assembly of this character can be effected without failure whereas, due to the absence of the lubricant, the two members would often bind before they reached proper assembling position if no power means were employed.

In the following description the improved method will be fully disclosed, and in the accompanying drawings when taken in connection with this specification one form of apparatus for assembling guns according to this improved method is disclosed, this apparatus being fully described and claimed in our application, Serial No. 528,575, of even date herewith.

In the drawings:

Figure 1 illustrates in section, a tube and liner partially assembled and showing, partially diagrammatically, mechanism for stretching the liner;

Figure 2 is a sectional view of a tube and liner before the liner has been stretched; and

Figure 3 is a sectional view of a completely assembled tube and liner.

In the following description, and in the claims it will be understood that the term "tube" includes either a single cylinder or a plurality of concentric cylinders assembled together.

The apparatus illustrated comprises a column or shaft 10 adapted to extend through the bore of the liner, this shaft being secured at the breech end to power mechanism indicated at 11, and having connected to its other end a plug 12 which is adapted to be screw threaded into the muzzle end of the liner. Pivotally connected to the power mechanism 11 are two arms or bars 13, the free ends of which are provided with hooked portions 14 adapted to fit into notches in a member 15 which is adapted to be clamped to the tube near its breech end. The mechanism 11, which may be of any well known type, preferably hydraulic, is adapted to effect relative movement between the bars 13 and the center shaft 10, as indicated by the arrows in Figure 1.

In carrying out the method the interior of the tube is first finished after which the exterior of the liner is prepared, the "shrinkage allowance" being added to the outer diameter of the liner, and the shoulders of the liner and tube being properly located. The liner is then placed in position on the shaft 10 which is preferably vertically disposed, and the plug 12 screwed into previously prepared threads in its muzzle end. The liner is then painted with lubricant, in accordance with the universal custom, with the exception of a portion near its muzzle end, which is left unlubricated. The tube is then, or has been in the meanwhile, heated to a degree insuring the proper expansion so that there will be ample clearance between its inner wall and the outer wall of the liner for the purpose of assembly.

The hot tube direct from the furnace is then lowered over the liner, from muzzle to breech until it has reached a position such as illustrated in figure 1 in which its lowermost shoulder is in contact with the lowermost or breech shoulder of the liner, while the upper corresponding shoulders of the tube and liner are still separated, both the tube and liner being suspended from the plug 12, and the liner being slightly

stretched or elongated from its breech shoulder to the muzzle end, due to its own weight and the weight of the tube. Hooked portions 14 of bars 13 are then placed in position to engage the members 15. Power is applied after a short interval of time and may be increased from time to time until the assembly has been completed, after which the tube and liner are allowed to cool slowy in the air. Upon the release of the power mechanism the tube and liner remain firmly gripped together with the various corresponding shoulders firmly seated and the liner either entirely without longitudinal stress or with a certain amount of tensional stress, depending upon the amount of power applied and the design of the respective cylinder.

By leaving a portion of the tube and liner near the muzzle end unlubricated and employing power means in the assembly, the two members are firmly gripped together and rotation of the liner in service is largely prevented.

It is obvious that various devices may be employed for carrying out the method described, which is not therefore limited to any particular apparatus.

Having thus described the invention what we claim as new and desire to secure by Letters Patent is:—

1. A method of assembling liners in tubes consisting in expanding the tube by heat, and shrinking it on a liner while maintaining the latter in a longitudinally extended condition.

2. A method of assembling liners in tubes consisting in expanding the tube, placing it around the liner, stretching or extending said liner and shrinking the tube on the liner while the latter is in an extended condition.

3. A method of assembling liners in tubes consisting in heating and expanding the tube, placing the liner under tension longitudinally, and shrinking said tube upon the liner while the latter is in a state of tension.

4. A method of assembling tubes and liners consisting in expanding a tube by heat and shrinking the same upon a liner which is positively prevented from contracting longitudinally.

5. As an article of manufacture, a gun comprising two cylinders, the inner cylinder being in a stretched or elongated condition.

6. A method of assembling tubes and liners consisting in expanding by heat a tube having an internal rearwardly facing shoulder, placing it, in expanded condition, over a liner having a corresponding forwardly facing external shoulder, applying oppositely directed forces on said tube and liner respectively whereby said corresponding shoulders are seated and the portion of said liner between its shoulder and muzzle end placed under tension, and shrinking said tube on the liner while said liner remains under tension.

7. A method of assembling tubes and liners consisting in expanding by heat a tube having an internal rearwardly facing shoulder, placing it, in expanded condition, over a liner having a corresponding forwardly facing shoulder, applying forces to seat said shoulders and to prevent longitudinal contraction of the liner between its shoulder and muzzle end, and shrinking the tube on the liner.

8. A method of assembling adjacent cylinders of a built-up gun so as to prevent relative rotation thereof in service, consisting in heating the outer cylinder to expand the same, coating the outer surface of the inner cylinder with lubricant with the exception of a section adjacent the muzzle end, placing the outer around the inner cylinder and shrinking it in such position.

9. A method of assembling liners in tubes consisting in heating and expanding the tube, placing the tube over the liner, and gradually stretching the liner as the tube contracts.

10. A method of assembling liners in tubes consisting in heating and expanding the tube, placing it over the liner, and applying opposed forces to the ends of the liner as the tube contracts.

11. A method of assembling liners in tubes consisting in heating and expanding the tube, placing it over the liner, and applying oppositely directed forces on the liner to prevent it from contracting longitudinally as the tube contracts.

In testimony whereof we hereunto affix our signatures.

REES C. MORGAN.
JOHN F. PELLY.