M. Modden,

Cotton Press.

No. 35,881. Patented July 15, 1862.

Fig. 1.

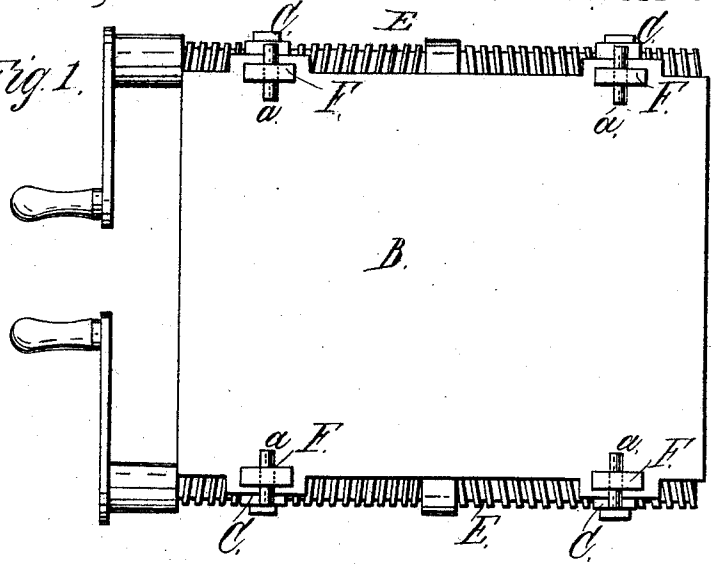

Fig. 2.

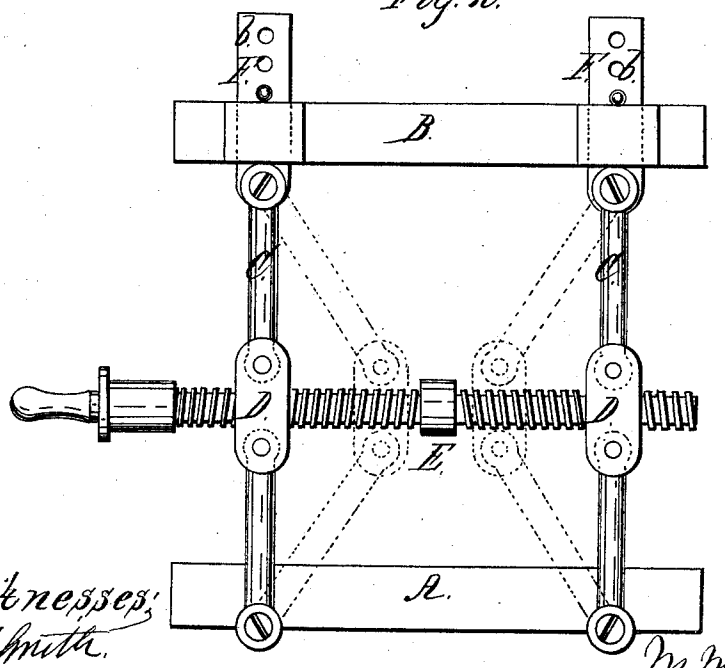

Witnesses;
G. H. Smith.
Edwd. J. Underwood

Inventor;
M. Madden Pr.
Amos Broadway Atty.

AM. PHOTO-LITHO. CO. N.Y. (OSBORNE'S PROCESS)

UNITED STATES PATENT OFFICE.

MICHEAL MADDEN, OF ST. LOUIS, MISSOURI.

IMPROVEMENT IN RETAINERS FOR HYDRAULIC PRESSES.

Specification forming part of Letters Patent No. **35,881**, dated July 15, 1862.

To all whom it may concern:

Be it known that I, MICHEAL MADDEN, of the city and county of St. Louis, and State of Missouri, have invented a new and Improved Retainer to be Used in Connection with Hydraulic and other Presses; and I do hereby declare the following to be a full, clear, and exact description of the same, reference being had to the annexed drawings, making part of this specification, in which—

Figure 1 represents a top view, and Fig. 2 a side elevation, of my said improved retainer.

My invention consists of a machine for the purpose of retaining tobacco or other matter which may have been pressed under a hydraulic or other press in the position to which the press forced it.

The following description will enable any one skilled in the arts to which it appertains to make and use my invention.

Similar letters of reference represent corresponding parts of the drawings annexed.

A represents the base of the retainer; B, the retaining-plate; C C, toggle-rods uniting the two plates. D D are screw-joint links, making the toggle-joint; E, a right-and-left screw, which works in corresponding threads cut in the said links. F F are keys, to which the upper ends of the toggle-rods are joined. Said keys are made to pass through correspondingly-shaped holes made in the retaining-plate B, and are fitted with pins *a* in holes *b*, by which they are adjusted according to the exigency of the case.

Thus much for the construction of the machine. Its operation is as follows: The retaining-plate is first taken off. The matter to be pressed is then set upon the bed-plate and the retaining-plate replaced. The whole is then placed under the press, by which the retaining-plate is forced down over the keys and on the matter beneath. When the pressing is complete, the pins are placed in the keys, and the screws made to act on the toggle-rods, drawing them together, as indicated in red lines. The pressure is then taken off, leaving the matter to be retained by the retainer.

Having now described the construction and operation of my invention, I claim and desire to secure by Letters Patent—

The toggle-rods C C, when the same are used in combination with the movable top B and movable keys F F, as set forth in the specification and shown in the drawings.

MICHEAL MADDEN. [L. S.]

Witnesses:

I. ADDISON DOWDALL,

E. N. DOWDALL.