July 4, 1950 C. M. DABROHUA 2,514,225

DISHWASHING DEVICE

Filed Dec. 18, 1946 3 Sheets-Sheet 1

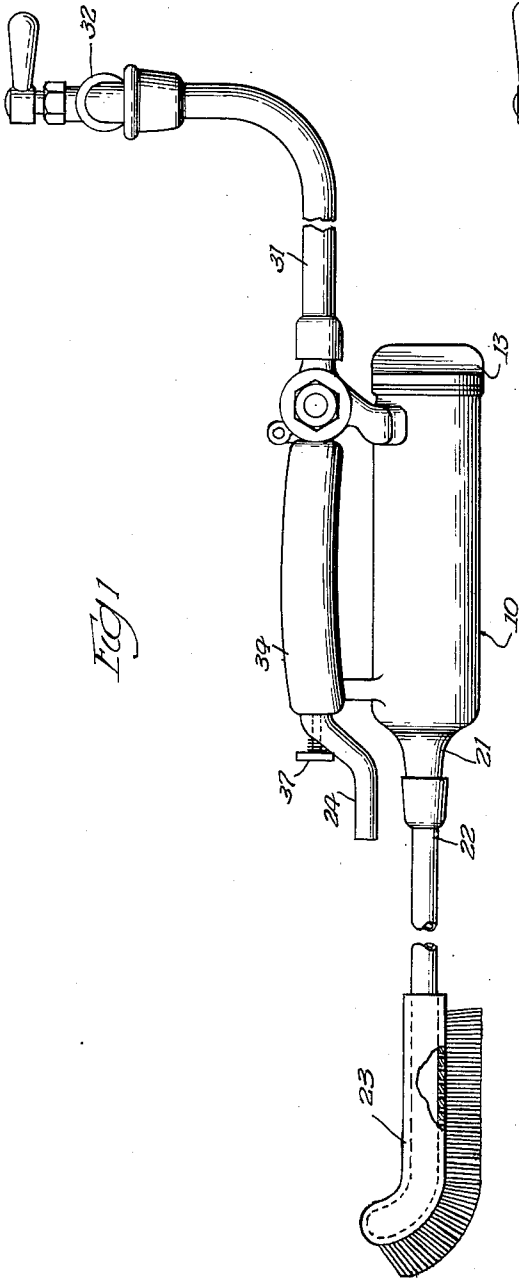

Fig. 1

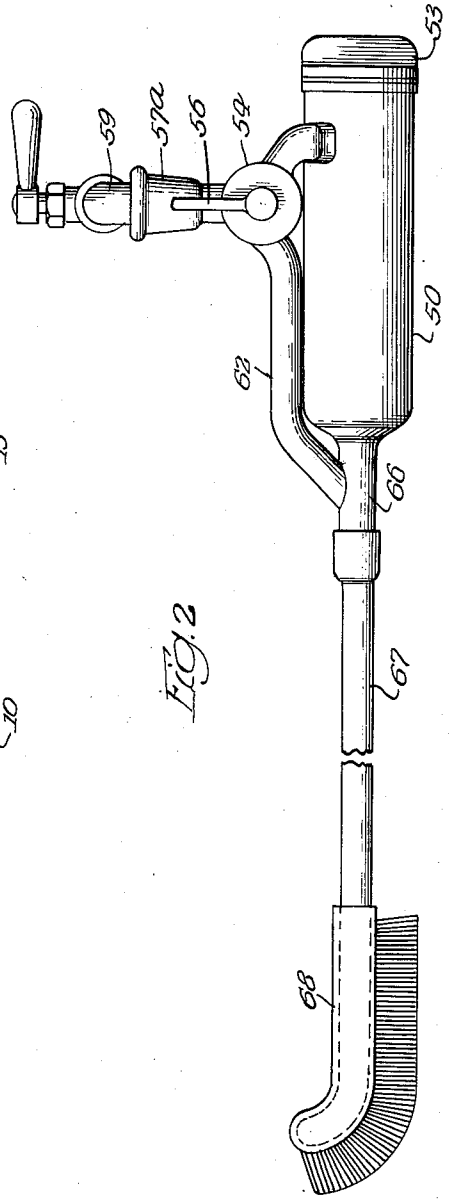

Fig. 2

Inventor:
Castro M. Dabrohua
By:- Fred Ellard
Atty.

July 4, 1950 C. M. DABROHUA 2,514,225

DISHWASHING DEVICE

Filed Dec. 18, 1946 3 Sheets-Sheet 2

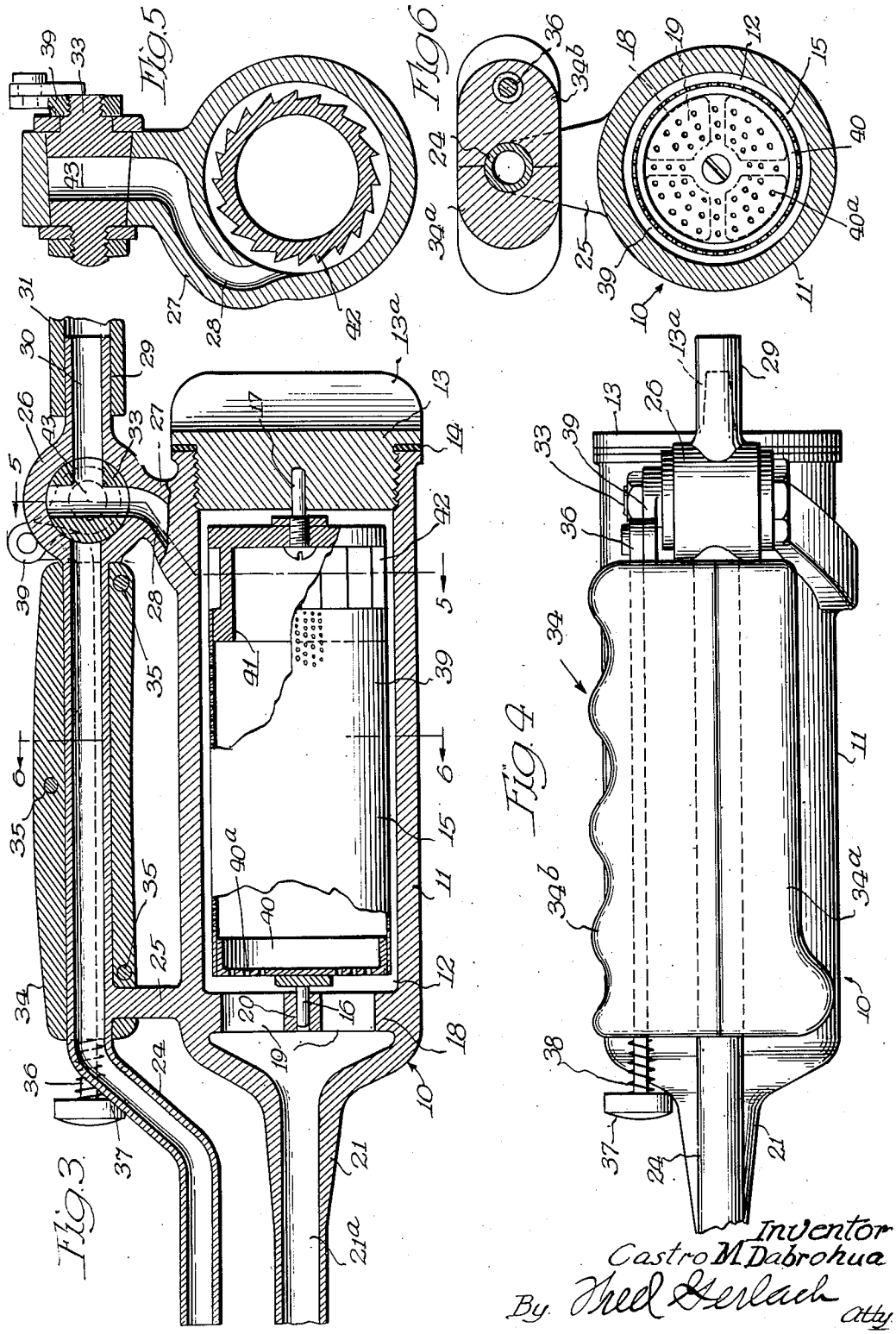

Inventor
Castro M. Dabrohua
By Fred Gerlach Atty.

July 4, 1950 C. M. DABROHUA 2,514,225

DISHWASHING DEVICE

Filed Dec. 18, 1946 3 Sheets-Sheet 3

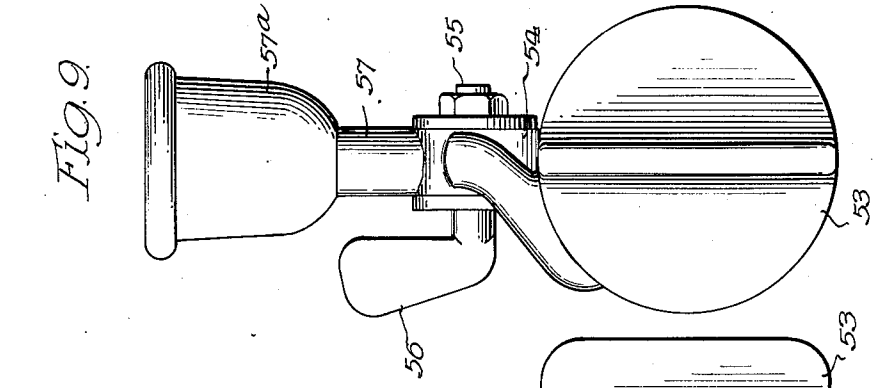

Fig. 9.

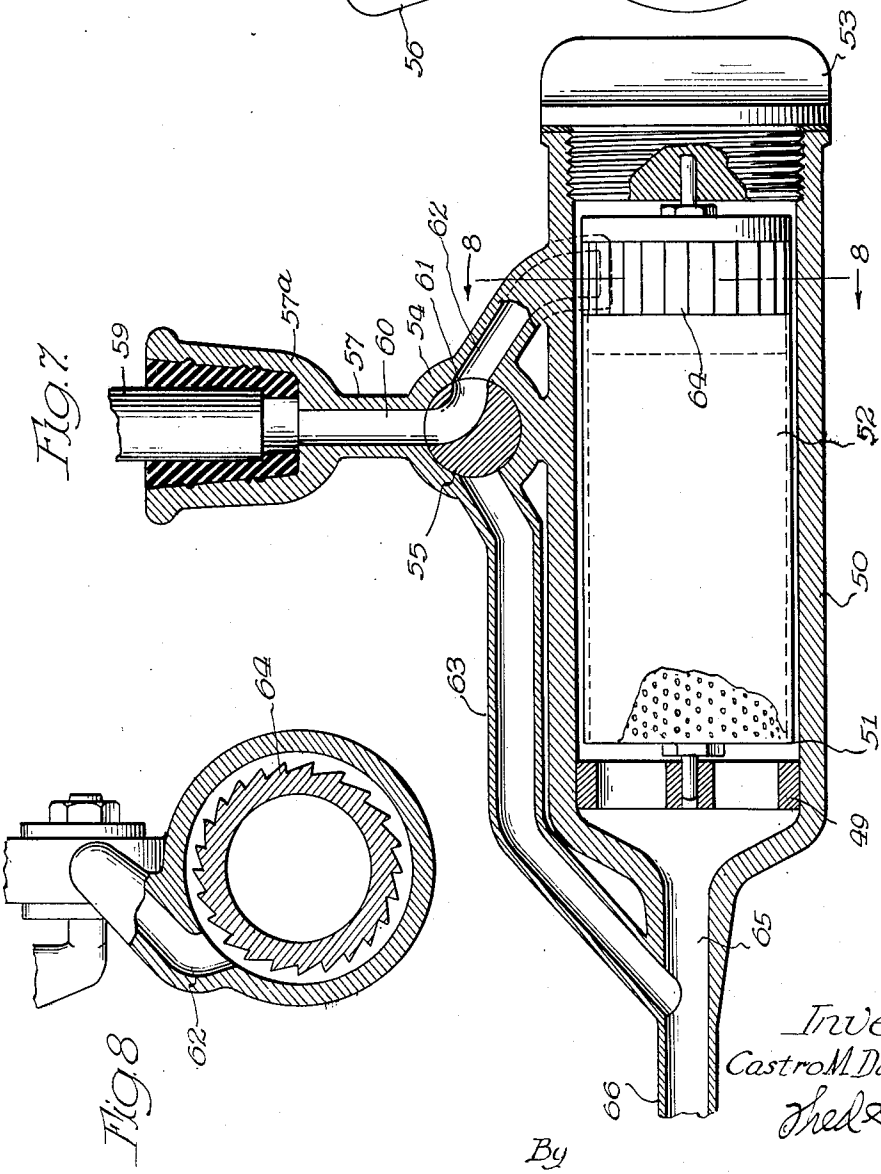

Fig. 7.

Fig. 8

Inventor
Castro M. Dabrohua
By Fred Gerlach
Atty

Patented July 4, 1950 2,514,225

UNITED STATES PATENT OFFICE

2,514,225

DISHWASHING DEVICE

Castro M. Dabrohua, Winnetka, Ill.

Application December 18, 1946, Serial No. 716,997

1 Claim. (Cl. 299—84)

1

Specifically, this invention has to do with a device for use in washing dishes and the like and contemplates an apparatus by means of which a modicum of soap or other detergent and/or water-softening agent is continuously added to a stream of hot water—the treated water being continuously fed to a brush or like element from which it flows onto the dish or other article being washed. But in a larger sense the invention envisages apparatus whereby soluble material of any kind can be intimately mixed with a stream of liquid solvent so that the stream of solution discharged from the apparatus contains a substantially constant percentage of solute.

As applied to apparatus for washing dishes and the like, my invention contemplates not only means for continuously treating a stream of hot water with soap or other detergent or with a water-softening agent, but also embraces, as an additional feature, an arrangement whereby the stream of hot water can instantly be diverted, at the will of the operator, so that it is discharged onto the dish or other article being washed without having first passed through that part of the apparatus where the soap or other material normally is added. Thus, the user can apply soaped or otherwise treated water to a dirty dish through the medium of a brush or other scrubbing element and can immediately thereafter flush or rinse the cleaned dish so as to remove the residue of soap or other detergent.

One of the objects of my invention is to provide an apparatus by means of which dishes and other articles can quickly be washed and rinsed and made ready for drying.

A further object is to provide an apparatus which will efficiently add soap or other detergent and/or water-softening agent to a stream of hot water and which will produce agitation such as to thoroughly mix the introduced material with the water.

Another object is to provide an improved apparatus by means of which a stream of solvent liquid can continuously be treated with a solid soluble material and wherein mechanical agitation of the solid soluble material takes place continuously only so long as the liquid is flowing—thus ensuring against the occurrence of too great a degree of saturation during periods when the flow is cut off, but providing for an adequate degree of saturation at all other times.

Other objects and advantages of my invention will become apparent as the ensuing detailed description progresses.

In the drawings (3 sheets) which accompany this specification:

Fig. 1 is an elevational view showing one embodiment of the invention attached to a hot water faucet and ready for use;

2

Fig. 2 is an elevational view of an alternative embodiment of the invention;

Fig. 3 is a longitudinal sectional view of the main part of the apparatus of Fig. 1;

Fig. 4 is a top plan view of the portion of the apparatus shown in Fig. 3;

Fig. 5 is an irregular transverse section taken along line 5—5 of Fig. 3;

Fig. 6 is a transverse section taken along line 6—6 of Fig. 3;

Fig. 7 is a longitudinal sectional view of the main part of the apparatus of Fig. 2;

Fig. 8 is a transverse section taken at line 8—8 of Fig. 7; and

Fig. 9 is an end elevational view of the apparatus of Fig. 7.

The dish washing apparatus of Figs. 1 and 3–6, inclusive, comprises a casting 10 of any suitable material such as aluminum, magnesium, plastic or even glass. Said casting 10 includes a portion 11 having a cylindrical chamber 12 into one end of which is threaded a removable plug 13 having an external diametrical rib 13a which serves as a finger grip. An annular gasket 14 serves to keep chamber 12 water tight at the plugged end.

A cylindrical rotor 15 is disposed within chamber 12 and has trunnions 16 and 17 at its respective ends which function as pivotal supports. Casting 10 has an internal spider portion 18 having openings 19 and a central bore 20 in which trunnion 16 is journaled. Trunnion 17 is journaled in a central bore in plug 13. A spout portion 21 constituting an integral part of casting 10 projects forwardly from spider 18 and is adapted to receive a detachable tube 22, shown in Fig. 1, which latter is connected to a rubber brush 23 (see Fig. 1)—the latter being suitably perforated to discharge a number of fine streams of soapy water which is delivered to the brush through tube 22.

The casting 10 also includes a tube 24 which is connected to portion 11 by means of a spacer 25, and one end of said tube is connected to a valve housing 26 which also is an integral part of casting 10. A portion 27 of casting 10 encloses a conduit 28 which connects chamber 12 with the interior of the valve housing. A protuberance or nipple 29 forming a continuation of housing 26 and constituting an integral part of casting 10 has a conduit 30 extending into the interior of the valve housing and is adapted to receive a hose 31 by means of which the apparatus is detachably connectable to a faucet 32 which supplies hot water to the apparatus.

A two-way tapered valve plug 33 is seated in

a tapered bore in housing 26 and has a T-shaped passageway 43 by means of which conduit 30 can be connected with conduit 28 and, alternately, with the bore of tube 24. When valve plug 33 is in the posture depicted in Figs. 3 and 5, a stream of hot water will flow from tube 31 through conduit 30 into conduit 28 and thence into chamber 12. When, on the other hand, valve plug 33 is rotated 90 degrees in a clockwise direction, as viewed in Fig. 3, hot water will flow through the valve into tube 24 and will be discharged out of the forward end thereof. The stream of water thus discharged from tube 24 is used for rinsing dishes, and tube 24 may be bent as shown or formed in any other way to suit the convenience of the user. Or it may, if desired, be extended into close proximity to brush 23.

Mounted on tube 24 is a two-piece handle 34 comprising parts 34*a* and 34*b* secured together by bolts or rivets 35. The part 34*b* is serrated along one edge to fit the user's fingers and is provided with a longitudinal bore through which extends a valve-operating push rod 36 having a head or pushbutton 37 by means of which the rod can be finger-actuated against the pressure of a coil spring 38. The end of rod 36 remote from pushbutton 37 is turned upwardly, as viewed in Fig. 3, and is pivotally connected to a valve-operating arm 39 which, in turn, is connected to valve plug 33. Normally, spring 38 holds rod 36 in the position in which it is shown in Fig. 3, wherein the valve is set to pass hot water into chamber 12, and said spring will restore the valve to that position whenever pushbutton 37 is released.

Rotor 15 comprises a foraminous sheet metal cylindrical shell 39 which is supported at its respective ends by cylindrical headers or end walls 40 and 41 to which are attached, respectively, the trunnions 16 and 17. Header 40 is fixedly attached to shell 39, but header 41 is so fitted therein as to be withdrawable; and formed on the periphery of the latter, in line with the discharge end of conduit 28, is an annular series of tooth-like vanes 42 which completely circumscribes the axis of rotation of the rotor and constitutes a Pelton wheel through the agency of which the incoming stream of hot water causes rotor 15 to rotate on its axis.

Rotor 15 is filled or partially filled with soap, soap chips or flakes or other detergent and/or a suitable water-softening agent, and, for the purpose of refilling, it can be withdrawn from chamber 12 upon removal of plug 13—whereupon header 41 can be detached from shell 39 to afford access to the interior thereof.

The hot water flowing into chamber 12 keeps rotor 15 in motion and some of it filters through the openings in foraminous shell 39, thus coming into contact with the soap or other material inside the rotor. The water entering the rotor is saturated with the detergent or water-softener, or both, as the case may be, and is discharged through the small apertures 40*a* in header 40 whereupon it rejoins and mixes with the stream of hot water which is continuously moving lengthwise of chamber 12 in the space surrounding the rotor. The treated water passes out through openings 19 and thence through the bore 21*a* of spout 21.

In operation, a continuous stream of soaped or otherwise treated hot water is fed to brush 23 so long as valve plug 33 is positioned as shown in Fig. 3; but whenever the operator depresses pushbutton 37 and thereby rotates valve plug 33 to its alternate posture, the treated water ceases to flow from the brush and, instead, a stream of clear water is ejected from the discharge end of tube 24.

In the embodiment of Figs. 2 and 7–9, the casting 50 comprises a cylindrical chamber 51 in which is mounted the rotor 52. This rotor is identical in construction with the previously described rotor 15 and is pivotally supported at its forward end on a spider 49 which is centered in the bore of chamber 51. The other end of rotor 52 is journaled in plug 53 which is identical with plug 13.

Casting 50 includes a valve housing 54 having a bore in which is seated a rotary valve plug 55, and the latter is provided with an external manually operable handle 56 by means of which the valve plug can be turned. An upwardly projecting extension 57 connects with valve housing 54 and is provided with a cup-like enlargement 57*a* in which is seated a soft rubber liner 58 the bore of which is of suitable diameter to fit snugly over the spout of a kitchen faucet 59.

A conduit 60 conducts hot water from faucet 59 to the interior of the valve housing where it enters a passageway 61 through valve plug 55 and is thereby directed either to a conduit 62, as shown in Fig. 7, or to a conduit 63—the latter connection being effected by turning valve plug 55 counterclockwise 90 degrees, as viewed in Fig. 7.

The water discharged from conduit 62 strikes the Pelton wheel 64 tangentially, as will be apparent from Fig. 8, and causes rotor 52 to rotate in the counterclockwise direction as viewed in that figure.

When the valve is turned to the position shown, soapy water is discharged through bore 65 of spout 66 and is thus transmitted through a flexible hose 67 to the brush 68, which latter may be identical with previously described brush 23. When the valve is turned to its alternate posture, clear hot water is transmitted through conduit 63 into bore 65 of spout 66 and thence through flexible hose 67 to brush 68.

While I have shown and described only two of the preferred embodiments of my invention, it will be apparent that there are many possible modifications within the scope and purview thereof, and, accordingly, I do not wish to be limited except as indicated by the terms of the appended claim.

What I claim as new and wish to secure by Letters Patent is:

A device of the class described, comprising a structure shaped to define a cylindrical chamber with one end thereof open, having a substantially tangential inlet port for liquid leading into the chamber at a point a small distance inwards of the open one end and also having an outlet port leading from the other end of the chamber, a spider fixed within, and extending transversely across, said other end of the chamber and provided with a central bearing, a solid plug fitting removably within, and serving as a closure for, said one open end of the chamber and provided with a central bearing in alignment with the bearing in the spider, and a cylindrical rotor disposed in, and extending lengthwise of, the chamber, adapted to retain a detergent, and consisting of a continuous foraminous side wall, a foraminous end wall fixed to the end of the side wall that is adjacent said other end of the chamber and having a trunnion journalled removably in the bearing in the spider, and an

imperforate comparatively thick end wall extending across, and removably secured to, the other end of the rotor side wall, having a trunnion journalled removably in the bearing in the plug, and provided with an annular series of integral outwardly extending teeth-like vanes disposed adjacent the inlet port and adapted to be so acted upon by liquid entering the chamber via the inlet port as to cause the rotor to rotate, said rotor being adapted to be withdrawn axially from the chamber upon removal of the plug, and being adapted to be charged with the detergent upon removal of the imperforate end wall from the foraminous side wall.

CASTRO M. DABROHUA.

REFERENCES CITED

The following references are of record in the file of this patent:

UNITED STATES PATENTS

Number	Name	Date
1,372,292	Johnson	Mar. 22, 1921
1,532,809	Girard	Apr. 7, 1925
1,566,439	Smith	Dec. 22, 1925
1,786,561	Collenburg	Dec. 30, 1930
1,884,786	Matlowsky	Oct. 25, 1932
1,910,235	Burkett	May 23, 1933
2,069,833	Horner	Feb. 9, 1937
2,266,902	Perkins	Dec. 23, 1941

FOREIGN PATENTS

Number	Country	Date
8,912 of 1915	Great Britain	May 11, 1916