C. F. ROTH.

LOCK.

APPLICATION FILED MAY 31, 1913.

1,068,932. **Patented July 29, 1913.**

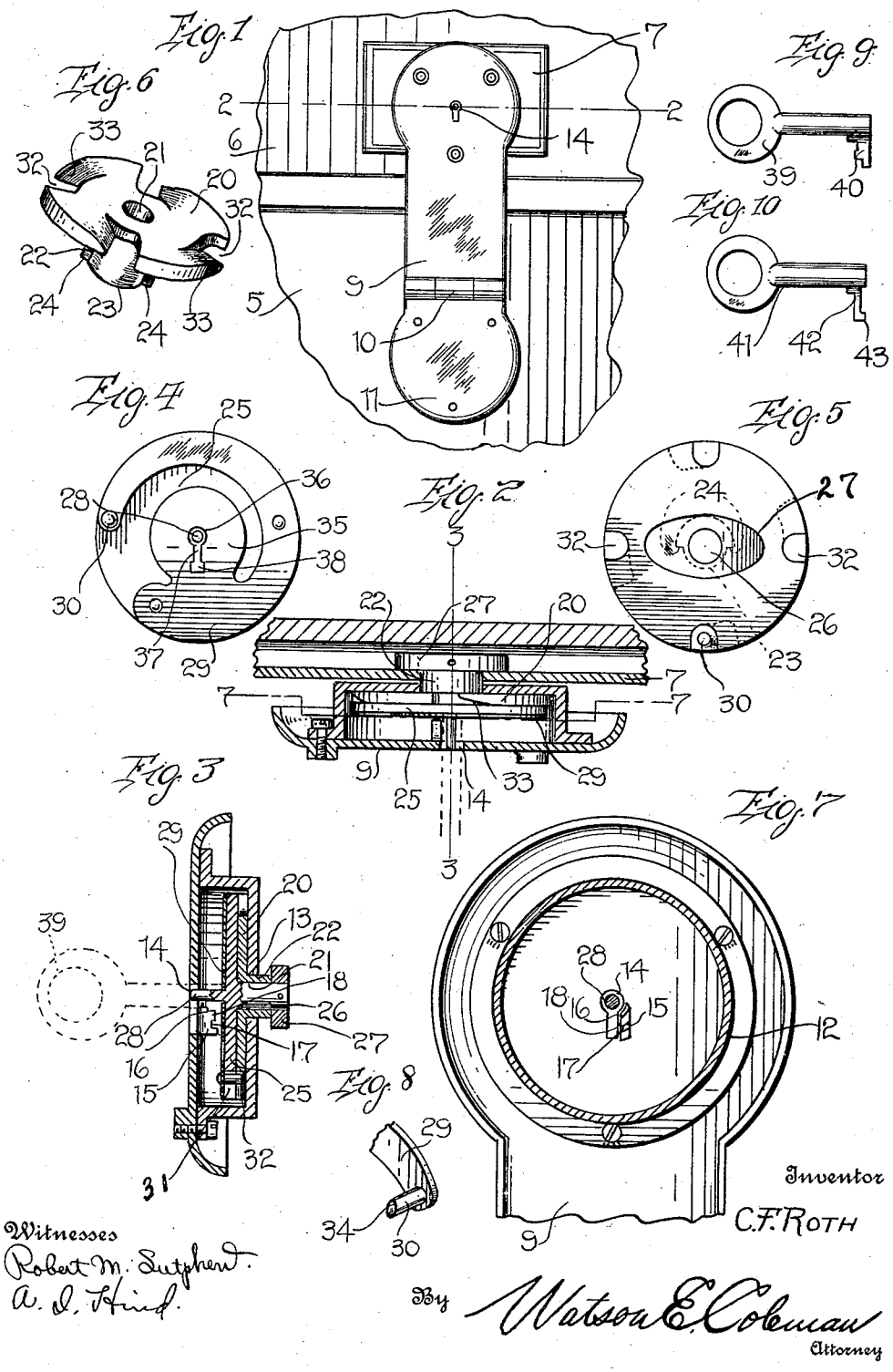

Witnesses
Robert M. Sutphen.
A. D. Hind.

Inventor
C. F. ROTH
By Watson E. Coleman
Attorney

COLUMBIA PLANOGRAPH CO., WASHINGTON, D. C.

UNITED STATES PATENT OFFICE.

CHARLES F. ROTH, OF PILOT GROVE, MISSOURI.

LOCK.

1,068,932. Specification of Letters Patent. Patented July 29, 1913.

Application filed May 31, 1913. Serial No. 771,117.

To all whom it may concern:

Be it known that I, CHARLES F. ROTH, a citizen of the United States, residing at Pilot Grove, in the county of Cooper and State of Missouri, have invented certain new and useful Improvements in Locks, of which the following is a specification, reference being had to the accompanying drawings.

This invention relates to locks, and more particularly to an improved hasp lock of that character commonly employed upon trunks and similar carriers, the invention having for its primary object to provide a lock of this type which is simple in its construction and may be easily and quickly locked or unlocked by the person having the proper key, but which cannot be unlocked by other tools or implements.

The invention has for a further object the provision of a lock of this character which is so constructed that the same can be unlocked by an individual key of required form, while at the same time said lock, as well as other locks of similar construction, may be opened by a common skeleton key of specific form.

The invention has for a still further object the provision of a lock of the above type, which is extremely strong and durable in its construction, consists of very few parts which are all of simple form, and may be manufactured at comparatively small cost.

With the above and other objects in view, the invention consists in the novel features of construction and the combination and arrangement of parts hereinafter more fully described, pointed out in the claims, and shown in the accompanying drawings.

For a full understanding of the invention, reference is to be had to the following description and accompanying drawings, in which—

Figure 1 is a front elevation of a portion of a trunk, showing the same provided with my improved hasp lock. Fig. 2 is a section taken on the line 2—2 of Fig. 1. Fig. 3 is a section taken on the line 3—3 of Fig. 2. Fig. 4 is a face view of the rotatable locking disk. Fig. 5 is a similar view looking at opposite face of said disk. Fig. 6 is a detail perspective view of the stationary disk. Fig. 7 is a section taken on the line 7—7 of Fig. 2. Fig. 8 is a detail fragmentary perspective view of the locking spring. Figs. 9 and 10 are detail views of the indivdual and skeleton keys, respectively.

Referring in detail to the drawings, 5 designates a portion of the front wall of the body of a trunk, or analogous receptacle or carrier, and 6 the lid or cover thereof. To the front wall of the trunk lid, a rectangular casing 7 is riveted or otherwise secured, said casing being centrally provided with an elongated opening 8, the longer axis of which extends at right angles to the longitudinal plane of said casing.

9 designates the hasp, which is hingedly connected, as at 10, to a plate 11 fixed to the front wall of the body of the trunk. The opposite end of the hasp 9 has secured upon its inner face a housing 12, in the body wall of which an opening 13 is provided, said opening having portions of different diameters for a purpose which will be later explained. The hasp 9 is provided with a key receiving opening 14, centrally located with respect to the housing 12. Adjacent to this key receiving opening, a ward 15 is formed upon the inner face of the hasp 9, and this ward is provided in its edge with recesses 16 and 17, respectively, thereby producing a shoulder 18.

A stationary locking disk 20 is arranged within the housing 12. This disk is centrally provided with an opening 21, said opening also extending through an extension 22, projecting from one face of said disk. This extension is of the form, shown in dotted lines in Fig. 5, and corresponds to the form of the opening 13 in the wall of the housing 12. The lower half of the projection 22 is cut away, as shown at 23, thereby forming shoulders 24 which rest upon complementary shoulders in the opening 13 and effectually prevent turning movement of the disk 20 in either direction. A rotatable disk 25 is also arranged within the housing 12, and closely engages with the inner face of the disk 20. A stud 26 is integrally formed with the disk 25 and centrally projects from one face thereof, said stud being mounted to rotate in the opening 21 of the disk 20. A locking head 27 is fixed in any suitable manner to the end of this stud and bears against the end of the extension 22 of the disk 20. The extension 22 of the disk 20 is adapted to be disposed through the opening 8 in the casing 7 which is secured to the lid of the trunk. The head 27, which is of the form shown in Fig. 5, when in its locking position has its longer axis disposed at right

angles to the longer axis of the opening 8 and bears against the inner face of the wall of the casing 7, as clearly shown in Fig. 2. A key post 28 projects from the other or outer face of the disk 25 and into the key receiving opening 14 provided in the hasp 9. To this outer face of the disk 25, a spring plate 29 of the form shown in Fig. 4 is riveted or otherwise secured. This plate is provided with an attenuated portion disposed adjacent the edge of the disk and free for movement relative thereto. In the end of this attenuated portion of the spring plate, a pin 30 is fixed, said pin extending in parallel relation to the axis of the disk and through a recess 31 provided in the edge thereof. This pin is adapted for engagement in any one of a series of notches or recesses 32 formed in the edge of the stationary disk 20. One edge of each of these recesses is beveled, as indicated at 33, said beveled faces extending in the same direction from the several recesses. The end of the pin 30 carried by the spring plate 29, is also beveled or inclined, as indicated at 34, so that the same will readily ride over the beveled faces 33 and force the free end portion of the spring plate 29 away from the face of the disk 25 when said latter disk is turned to dispose the locking head 27 in position for movement outwardly through the opening 8 in the wall of the casing 7. The spring plate 29 is also provided with a substantially circular portion 35 which is centrally located upon the face of the disk 25 and is provided with an opening 36 to receive the end of the key. A slot 37 is formed in the circular portion, communicating at one of its ends with the opening 36, and has its other end enlarged, as indicated at 38.

39 indicates the individual key which is provided with a bit 40, so formed as to readily pass between the spring plate 29 and the recesses and shoulder of the ward 15 when the key is turned. The end of the key is formed so as to readily fit within the keyhole 36 37, centrally provided in the circular portion 35 of the plate 29. It is of course, understood that different locks will have wards 15 of different form and differently formed keys 39 for the respective locks. However, in Fig. 10 I have shown a skeleton key 41 which is common to all locks constructed in the manner above described. This key is provided with a bit 42 having a lug or shoulder 43 formed upon its end. In inserting the key, the key post 28 is received in the hollow key shank and the lateral portion of the bit 42 engages in the slot 37 provided in the plate 29, while the lug 43 is disposed in the enlarged end 38 of said slot. It will be understood that the thickness of the bit 42 must be such that it will not contact with the shoulder 18 of the ward 15 when the key is turned. The shoulder 18 of the wards 15 provided in all locks are disposed at the same distance from the face of the plate 29.

Assuming that the head 27 is in its locking position within the casing 7, as shown in Fig. 2, when it is desired to open the trunk or other receptacle, the key is engaged upon the pin 14 and the end of said key with its bit 40 disposed in the keyhole slot 36, 37. The key is now turned to rotate the disk 25 to which the locking head 27 is connected, the bit of the key passing through the notches or recesses in the ward 15. In this movement of the disk, the beveled end of the pin 30 is brought into engagement with one of the beveled faces 33 on the stationary plate 20, and said pin forced from the recess 32 in said plate against the action of the spring 29. The disk 25 is turned through an arc of ninety degrees, when the spring pressed pin 30 will engage in another of the notches or recesses 32 in the plate 20, thus again locking the disk upon said plate. The elongated head 27 now has its longer axis disposed in parallel relation to the longer axis of the slot in the wall of the casing 7 so that said head can be moved outwardly therefrom when the hasp 9 is swung to its open position. When it is desired to again lock the hasp to the casing 7 after the head 27 is disposed within said casing, the movement of the disk 25 is continued in the same direction for another quarter turn to dispose said head at right angles to the longer axis of the slot in the casing wall. The key may be readily withdrawn by simply disengaging the same from the keyhole slot and turning said key until the bit is in alinement with the slot in the hasp.

From the foregoing, it is believed that the construction and manner of operation of my improved lock will be clearly and fully understood.

The invention provides means whereby trunks and similar receptacles may be securely locked and liability of the same being opened by unauthorized persons effectually prevented. My improved lock is also of very simple construction, and the several parts thereof may be produced at small cost. It is also highly durable as well as efficient and reliable in practical use.

While I have shown and described the preferred construction and arrangements of the several elements, it will be understood that the invention is susceptible of considerable modification therein and I therefore reserve the right to resort to all such legitimate changes as may be clearly embodied within the scope and spirit of the appended claims.

Having thus described my invention, what I claim, is:

1. In a lock of the character described, a

stationary locking disk provided in its periphery with a plurality of spaced recesses, a key operated disk rotatably mounted upon said stationary disk, a locking head carried by the latter disk, and means movably mounted upon the rotatable disk to occupy any one of the recesses in said stationary disk and lock the rotatable disk against movement.

2. In a lock of the character described, a stationary disk provided in its periphery with a plurality of spaced recesses, a rotatable disk mounted upon said stationary disk, a locking head carried by the rotatable disk, and a spring pressed pin mounted upon the rotatable disk to occupy any one of the recesses of said stationary disk to lock said rotary disk against movement, and means to force the locking pin out of the recess in said disk when the rotary disk is turned.

3. In a lock of the character described, a stationary disk provided with a plurality of spaced recesses in its periphery, a disk rotatably mounted upon said stationary disk, a locking head carried by the rotary disk, a spring plate fixed to one face of the rotary disk, a pin carried by said plate adapted to enter any one of the recesses of the stationary disk whereby the rotary disk is locked against movement, said stationary disk being provided with means at one edge of its recess to force the locking pin out of said recess when the rotary disk is turned, and a key engaging said spring plate whereby the rotary disk may be turned.

4. In a lock of the character described, a stationary disk, a rotatable disk mounted upon said stationary disk, a locking head carried by the latter disk, a spring plate fixed to one face of the rotatable disk, a locking pin on said plate, said stationary disk being provided with means to receive said pin whereby the rotary disk is locked against turning movement, and an operating key adapted to engage the spring plate and turn the rotary disk and release the locking pin from engagement from the stationary disk.

5. In a lock of the character described, a stationary disk, a rotatable disk mounted upon said stationary disk, a locking head carried by the stationary disk, means mounted upon the rotatable disk for locking engagement with said stationary disk, said stationary disk being provided with means to force said locking means out of its locking position when the rotary disk is turned, said rotary disk being provided with an axially projecting key post, and a key, the shank of which is adapted to receive said key post, said key engaging one element of the locking means upon said disk whereby the rotary disk may be turned.

6. In a lock of the character described, a stationary disk provided with a plurality of spaced recesses in its periphery, a rotary disk mounted upon said stationary disk, a locking head carried by said latter disk, a spring plate mounted upon one face of the rotary disk, a pin carried by said plate and normally disposed in one of the recesses of the stationary disk to lock said rotary disk against movement, said spring plate having a key receiving opening, an operating key adapted to be received in said opening whereby the disk may be turned, said stationary disk being provided with means to force said pin out of the recess therein in the turning movement of the rotary disk in one direction.

7. In a lock of the character described, a stationary disk provided in its periphery with a plurality of spaced recesses and beveled faces extending in a common direction and leading to said recesses, a rotatable disk mounted upon the stationary disk, a locking head carried by the latter disk, said rotary disk having a notch in its periphery, a spring pressed pin disposed in said notch and adapted for engagement in any one of the recesses in the stationary disk, said pin having a beveled end face for engagement with a beveled face of the stationary disk, and a key to turn the rotary disk and move it into engagement with the beveled face of the stationary disk whereby the pin is forced to its release position.

In testimony whereof I hereunto affix my signature in the presence of two witnesses.

CHARLES F. ROTH.

Witnesses:
M. C. LYDDANE,
J. D. YOAKLEY.

Copies of this patent may be obtained for five cents each, by addressing the "Commissioner of Patents, Washington, D. C."