Feb. 1, 1944. B. F. KELLEY 2,340,597

ROTARY SLIP LIFTER

Filed March 23, 1942 3 Sheets-Sheet 1

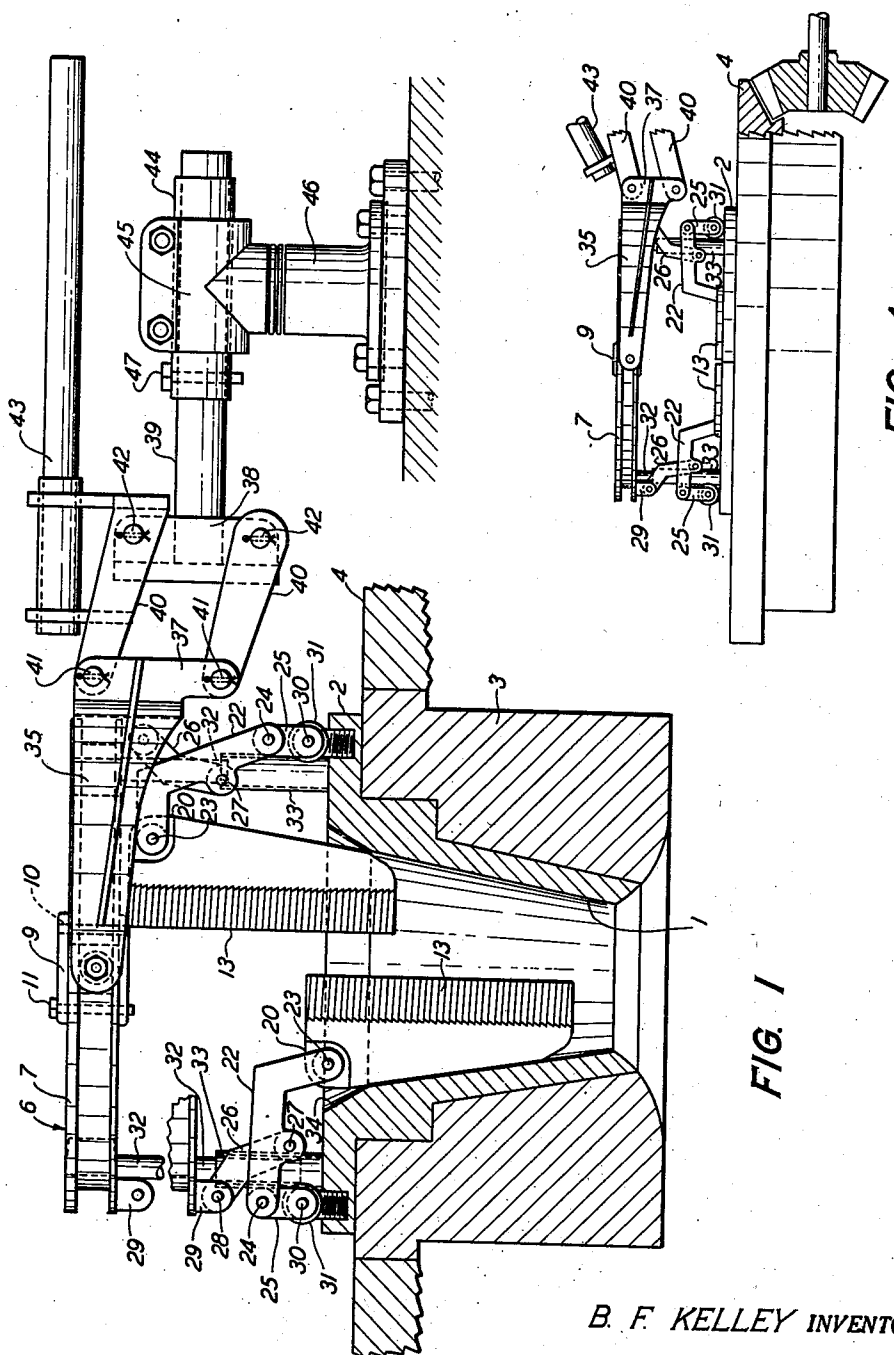

FIG. 1



FIG. 4

B. F. KELLEY INVENTOR.

BY R. Werlin

ATTORNEYS.

Feb. 1, 1944. B. F. KELLEY 2,340,597

ROTARY SLIP LIFTER

Filed March 23, 1942 3 Sheets-Sheet 2

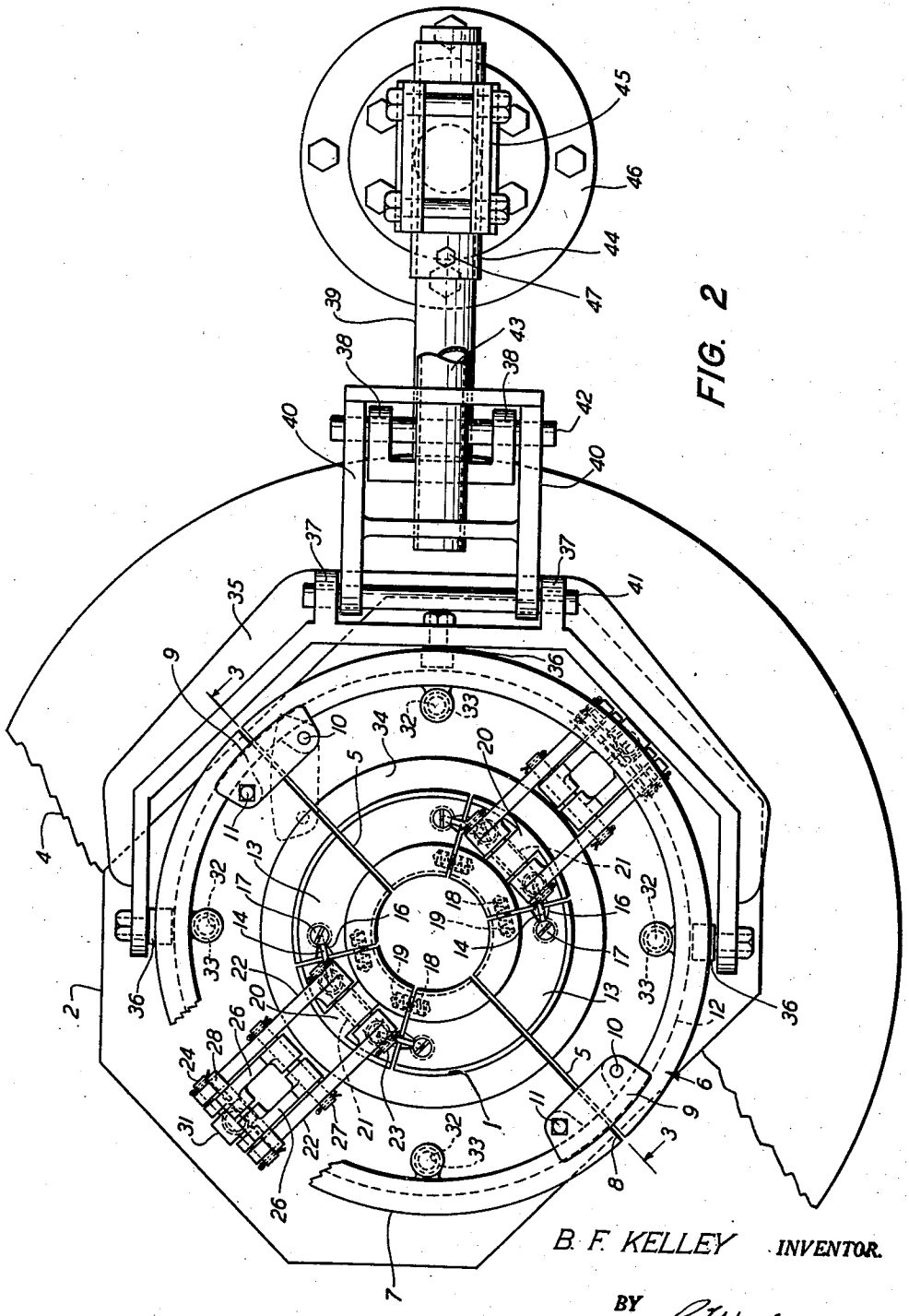

FIG. 2

B. F. KELLEY INVENTOR.

BY R. Werlein

ATTORNEYS.

Feb. 1, 1944. B. F. KELLEY 2,340,597

ROTARY SLIP LIFTER

Filed March 23, 1942 3 Sheets-Sheet 3

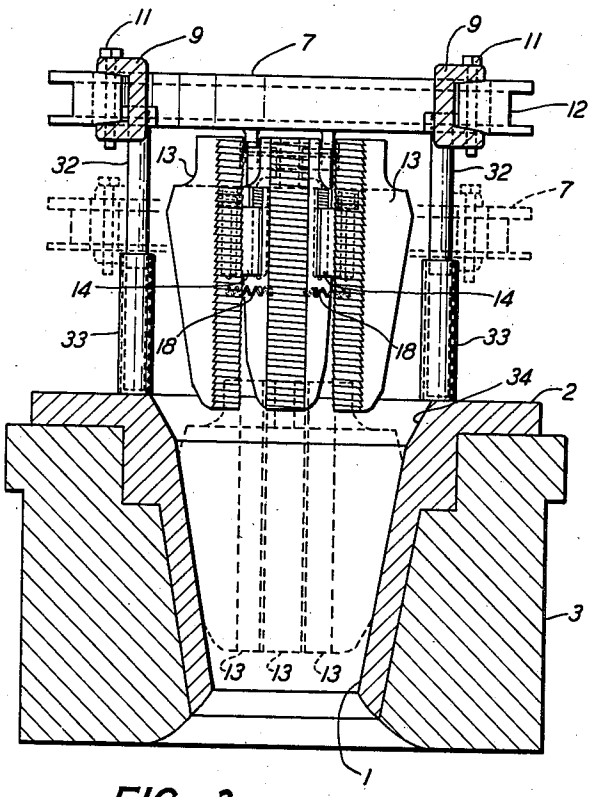


FIG. 3

FIG. 5

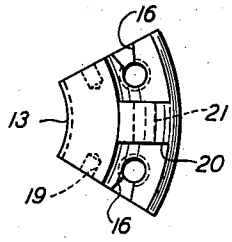


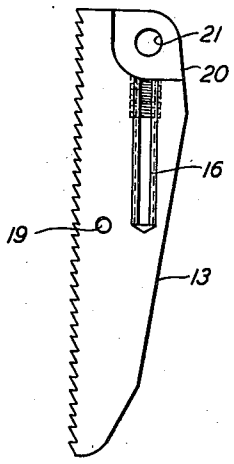


FIG. 6

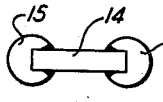


FIG. 7

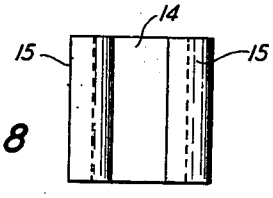


FIG. 8

B. F. KELLEY INVENTOR.

BY

ATTORNEYS.

Patented Feb. 1, 1944

2,340,597

# UNITED STATES PATENT OFFICE

2,340,597

## ROTARY SLIP LIFTER

Benjamin F. Kelley, Tulsa, Okla.

Application March 23, 1942, Serial No. 435,851

9 Claims. (Cl. 24—263)

The invention relates to a device for lifting rotary slips, and is adapted particularly for raising and lowering pipe-gripping slips into and out of engagement with drill pipe or casing being run in and out of a well through a conventional rotary table, without removing the slips and the slip spider from the table.

When running drill pipe or casing in or out of a well being drilled by the use of a rotary table, it is necessary, of course, to add sections or remove sections of the pipe, as the case may be. While a section is being added or removed from the string, it is necessary to support the remainder of the pipe string which is suspended in the well. When a joint has been added, the string must then be lowered in the well for a distance equal to the length of the newly added joint, and the string again supported, in order that an additional joint may be added to the string. When "breaking-out" a pipe string, the reverse operations take place, the pipe string being held just below the top joint, while that joint is removed; then the string is drawn upwardly until another joint is exposed above the top of the well; the main string again suitably supported and the newly exposed joint removed, and so on. Often it is desired to rotate the rotary table while it supports the portion of the string in the well, to aid in making-up or breaking-out joints of pipe.

Normally, while the string is being raised or lowered, the slips heretofore commonly used are removed completely from the table and are only inserted at the moment it is desired to grip and support the string in the rotary table.

The present invention has for its principal object the provision of an improved form of rotary slip lifter for inserting and removing the slips, as required, without removing them bodily from the rotary table, while the rotary table is stationary or rotating as desired.

Another object is the provision of an improved form of slip lifting device whereby the slips may be retracted or advanced simultaneously and uniformly relative to the pipe while moving vertically relative to the rotary table.

A further object is the provision, in a device of the character described, of an improved form of inter-slip linkage for joining a plurality of slips into a unitary assembly forming a segment of the entire slip assembly, whereby each unitary assembly may be connected to the lifting ring by a single linkage.

Still another object is to provide a form of slip and lifting assembly wherein the entire assembly is arranged in two half-sections for rapid and efficient assembly and disassembly of the device.

Other and more specific objects and advantages of this invention will become apparent from the following detailed description when read in conjunction with the accompanying drawings which illustrate a useful embodiment in accordance with this invention.

In the drawings:

Fig. 1 is a side elevation of the device, partly in section, showing, on the right hand side thereof, the parts of the device in the position when the slips are raised in pipe-releasing position, and on the left hand side showing the position of the parts when the slips are lowered into pipe-gripping position;

Fig. 2 is a plan view of the device with all of the slips lowered into the pipe-gripping position;

Fig. 3 is a cross-sectional elevation of the device taken along line 3—3 of Fig. 2 and showing the spider and slips in the raised position in full lines, and the lowered position in dotted outlines;

Fig. 4 is an external side elevation showing the device in position on a rotary table;

Figs. 5 and 6 are top and side views, respectively, of one of the slips; and

Figs. 7 and 8 are top and side views, respectively, of one of the link members employed for linking together adjacent slips.

Referring to the drawings, the device, in accordance with this invention comprises a slip bowl 1 of generally conventional downwardly tapered conical form, having a laterally extending flange 2 about its upper edge, and which is adapted to be non-rotatably seated in the usual master bushing 3 of a conventional rotary table 4. Slip bowl 1 is formed in two halves being split diametrically at 5.

A slip supporting spider, designated generally by the numeral 6 comprises a ring 7, split diametrically at 8, the halves of the ring being detachably connected by means of connectors 9, which are C-shaped in cross section and which span the ends of the ring halves and the splits 8. The connectors 9 are pivotally attached at 10 to an end of one-half of ring 7 and to the adjacent end of the other ring half by means of a pin 11 which extends through the connector and a suitably perforated portion of the ring. The outer periphery of ring 7 is provided with an outwardly opening circumferential channel 12.

In the embodiment shown in the drawings six pipe-gripping slips 13 are arranged and adapted to be inserted in slip bowl 1. The slips are of the usual wedge-shaped outline and have ser-

rated pipe gripping faces. The slips are curved in transverse cross section to form circular segments and when arranged side-by-side in the slip bowl, they form a circular lining therein. The slips are arranged in groups of three, the outer slips of each group being linked to the center slip by means of flat link plates 14, two opposite side edges of which have cylindrical beads 15 which are adapted to enter registering slot 16 milled into the adjacent end faces of continuous slips. Slots 16 are positioned intermediate the front and rear faces of the slips and the inner ends of the slots are cylindrically milled to permit rotative movement of the beads 15 therein. The upper portions of the tubular inner ends of slots 16 are threaded to receive threaded plugs 17 for confining the link plates 14 within the slots. The side faces of slots 16 are machined to taper outwardly from the cylindrical inner ends to the end faces of the slips. The outward taper of the sides of slots 16 is adapted to provide substantial clearance between the sides of the slots and the adacent side faces of link plates 14, whereby the outer slips of each group have a limited degree of swinging movement relative to the center slip about the cylindrical beads 15 as pivots. This permits the slips of each group to spread apart when lifted from the bowl. The spreading action is aided by coil springs 18 extending between the adjacent end faces of the center and outside slips of each group, the springs being seated in suitable registering recesses 19 bored into these adjacent end faces and normally tending to force the slips apart.

The center slip of each of the slip groups is provided on its upper end with an upstanding lug 20 having an aperture 21 extending transversely therethrough. Lug 20 is pivotally connected between the adjacent ends of a pair of spaced parallel bellcrank levers 22—22 by means of a pivot pin 23 extending through aperture 21 and the ends of levers 22—22. The opposite ends of levers 22 are pivotally connected by means of a hinge pin 24 to a pair of hinge arms 25—25 which are in turn pivotally connected by means of a hinge pin 30 to a bracket 31 which is rigidly mounted on flange 2. A pair of spaced parallel links 26—26 are pivotally connected at 27 to intermediate points on levers 22—22, the opposite ends of links 26—26 being hingedly connected at 28 to a lug 29 attached to ring 7. Lugs 29 are positioned at the mid-portions of the halves of ring 7, being thus positioned diametrically opposite each other on the ring. By means of the bell-crank linkage between each group of slips and the ring 7 the groups of links are drawn upwardly and outwardly relative to the axis of slip bowl 1 when the ring is raised and are thus retracted to a pipe-releasing position. Lowering of the ring reverses these movements of the slips and inserts them into the slip-bowl into a pipe-gripping position. To guide the ring 7 in its vertical movements relative to the top of the slip bowl, a plurality of circumferentially spaced leg members 32 are attached to ring 7 and extend downwardly therefrom. An equal number of hollow standards 33 are mounted on the upper face of flange 2 and are adapted to receive leg members 32 which reciprocate in the bores of standards 33 when ring 8 is raised and lowered. Legs 32 and standards 33 are so positioned as to align splits 8 in ring 7 with splits 5 forming the division between the halves of the slip bowl. The upper portion of the bore of slip bowl 1 is chamfered at 34 to taper outwardly relative to the axis of the bowl at a greater angle than the remainder of the bowl in order to permit greater lateral displacement of the slips at the top of the bowl.

The mechanism for lifting and lowering the spider 6 and the attached slips consists of a semi-circular operating yoke 35 adapted to encircle half of ring 7, the open ends and center of the yoke being provided with rollers 36 extending into channel 12 of the ring, whereby the ring is rendered freely rotatable within the enclosing yoke. The end rollers 36 are positioned in channel 12 on diametrically opposite sides of the ring, and together with the roller positioned at the center of the yoke, cooperate with the flanged sides of channel 12 to rotatably support the ring in a substantially level horizontal position throughout its reciprocating movements, and thereby raise and lower the slips evenly and in unison.

Attached to the back of yoke 35 and extending rearwardly therefrom are a pair of flat hinge plates 37—37 which are spaced apart and are elongated vertically. A second pair of hinge plates 38—38 of generally similar form to plates 37—37 are spaced rearwardly from the latter in general alignment therewith and are supported upon a horizontal arm 39. Each of the plates 37 and the corresponding plate 38 forms two sides of a parallelogram hinge, the other two sides of which are formed by pairs of parallel hinge bars 40—40 which have their ends pivotally connected to plates 37 and 38 by means of vertically spaced hinge pins 41—41 and 42—42 extending horizontally between the pairs of hinge plates 37—37 and 38—38, respectively. The upper pair of hinge bars 40—40 are rigidly connected to an operating handle 43. Horizontal arm 39 extends through a tubular sleeve 44 which is enclosed by a clamp 45 which is mounted to swivel on a pedestal 46 which is rigidly attached to a suitable base structure not shown. A locking pin 47 extends through arm 39 and sleeve 44 to lock these members together.

With the above described mechanism, the slips 13 may be lowered into slip bowl 1 by raising operating handle 43 from the position shown in Fig. 1 to the position shown in Fig. 4. Reverse movement of the handle 43 raises the slips from the bowl and retracts them. These movements of the handle operate through the parallel hinge connection to operating yoke 35 to lower or raise the latter, as the case may be, and yoke 35 in turn acts through the contact of rollers 36 with ring 7 to raise and lower ring 7 and the slip groups suspended therefrom. By use of the parallelogram form of hinge connection between the yoke and the operating handle, the movement of ring 7 relative to the top of the slip bowl is constrained to be truly vertical and all of the slips will therefore, be retracted and advanced in an even and uniform manner which is highly advantageous in devices of this character. The relatively loose inter-linkage of the slips of each group and the action of springs 18 hereon, permits the slips to be relatively widely spread when retracted from the bowl, thereby effecting quick and full release of pipe previously engaged thereby. Lever 43, employed for the manual operation of the lifting mechanism, may be replaced by other suitable and conventional pneumatic or mechanical lever devices of a character well understood in the art.

The rotary mounting of ring 7 in yoke 35 per-

mits the raising or lowering of the spider and slips while these elements are being rotated by rotation of the rotary table on which they are mounted. The necessity for complete removal of the slips from the table is thus avoided when running-in or breaking-out pipe strings in a well, the slips being always held in position for use in gripping the pipe at any time such action may be desired.

In order to remove the spider assembly from the rotary table, a few simple operations are required, locking pin 47 is withdrawn and arm 39 is moved a short distance in the right-hand direction through sleeve 44. This retracts yoke 35 from contact with ring 7 and disconnects the lifting mechanism from the spider mechanism. Pins 11 are withdrawn from clamps 9 and the latter are then swung about hinge points 10 to the position shown in dotted outlines in Fig. 2. This disconnects the half sections of ring 7 from each other and permits the entire spider assembly, including the slip bowl, to be lifted out of the master bushing in two parts, the parts separating along the aligned splits 5 and 8 of the lifting ring and slip-bowl respectively. To reassemble the device these few simple operations are reversed.

Although the embodiment illustrated and described herein employs six pipe-gripping slips arranged in groups of three, each group being included in one-half of the complete spider assembly, it will be understood that the number and specific form of the slips in each group may be varied, since this invention is not to be restricted to these specific features.

It will be understood that various other alterations and modifications may be made in the details of the device herein described without departing from the scope of the appended claims but within the spirit of this invention.

What I claim and desire to secure by Letters Patent is:

1. In a rotary well drilling apparatus, a drill spider comprising, a slip bowl, a horizontally disposed lifting ring vertically spaced from the top of the slip bowl and adapted for vertical reciprocation relative thereto, two separate groups of pipe-gripping slips having separate operating linkages to opposite sides of said ring and said slip bowl whereby said groups of slips may be inserted into and retracted from said slip bowl in unison by the reciprocation of said ring, and a reciprocating mechanism for said ring having rotative engagement therewith.

2. In a rotary well drilling apparatus, a drill spider comprising, a slip bowl, a horizontally disposed lifting ring vertically spaced from the top of the slip bowl and adapted for vertical reciprocation relative thereto, said ring and slip bowl being formed in two complementary concentric sections, releasable connection members connecting the ring sections together, two separate groups of pipe-gripping slips having separate operating linkages to opposite sides of said ring and said slip bowl intermediate the ends of said sections whereby said groups of slips may be inserted into and retracted from said slip bowl in unison by the reciprocation of said ring, and a reciprocating mechanism for said ring having rotative engagement therewith.

3. In a rotary well drilling apparatus, a drill spider comprising, a slip bowl, a horizontally disposed lifting ring vertically spaced from the top of the slip bowl and adapted for vertical reciprocation relative thereto, two separate groups of pipe gripping slips having separate operating linkages to opposite sides of said ring and said slip bowl whereby said groups of slips may be inserted into and retracted from said slip bowl in unison by the reciprocation of said ring, and a reciprocating mechanism operatively engaging said ring, said reciprocating mechanism including a semi-circular yoke in which said ring is rotatively journalled and means for vertically reciprocating said yoke, said means including a rigid support bracket spaced from said yoke, a parallelogram type hinge pivotally connecting said yoke to said bracket, and an operating lever connected to said hinge.

4. In a rotary well drilling apparatus, a drill spider comprising, a slip bowl, a horizontally disposed lifting ring vertically spaced from the top of said slip bowl and adapted for vertical reciprocation relative thereto, two separate groups of pipe-gripping slips having separate operating linkages to opposite sides of said ring and said slip bowl whereby said groups of slips may be inserted into and retracted from said slip bowl in unison by the reciprocation of said ring, and a reciprocating mechanism for said ring having rotative engagement therewith, each of said operating linkages comprising a bell-crank lever having one arm pivotally connected to a group of slips and another arm pivotally connected to said slip bowl, and a link pivotally connecting the fulcrum of said lever to said ring.

5. In a rotary well drilling apparatus, a drill spider comprising, a slip bowl, a horizontally disposed lifting ring vertically spaced from the top of the slip bowl and adapted for vertical reciprocation relative thereto, two separate groups of pipe-gripping slips having separate operating linkages to opposite sides of said ring and said slip bowl whereby said groups of slips may be inserted into and retracted from said slip bowl in unison by the reciprocation of said ring, and a reciprocating mechanism for said ring having rotative engagement therewith, each of said groups of slips including a plurality of hingedly connected circularly arranged slips and resilient means disposed between adjacent slips to normally urge the slips apart.

6. In a rotary well drilling apparatus, a drill spider comprising, a slip bowl, a horizontally disposed lifting ring vertically spaced from the top of the slip bowl and adapted for vertical reciprocation relative thereto, two separate groups of pipe gripping slips having separate operating linkages to opposite sides of said ring and said slip bowl whereby said groups of slips may be inserted into and retracted from said slip bowl in unison by the reciprocation of said ring, and a reciprocating mechanism operatively engaging said ring, said reciprocating mechanism including a semi-circular yoke in which said ring is rotatively journalled and means for vertically reciprocating said yoke, said means including a hinge bracket spaced from said yoke and mounted on a horizontal support arm, a pedestal carrying a horizontal sleeve in which said support arm is adjustably mounted, said sleeve being adapted to swivel on said pedestal, a parallelogram type hinge pivotally connecting said yoke to said hinge bracket, and an operating lever connected to said hinge.

7. In a rotary well drilling apparatus, a drill spider comprising, a slip bowl, a horizontally disposed lifting ring vertically spaced from the top of the slip bowl and adapted for vertical reciprocation relative thereto, a plurality of circum-

ferentially spaced guide members cooperating between the ring and slip bowl to guide the ring during said reciprocation, two separate groups of pipe-gripping slips having separate operating linkages to opposite sides of said ring and said slip bowl whereby said groups of slips may be inserted into and retracted from said slip bowl in unison by the reciprocation of said ring, and a semi-circular lifting yoke having rotative engagement with the periphery of said ring, and an operating lever hingedly connected to said yoke for affecting vertical reciprocation thereof.

8. A drill spider comprising, a slip bowl, an annular slip support arranged for vertical reciprocation relative to said slip bowl, and spaced pipe-gripping slips having pivoted linkage both to said slip bowl to said slip support and a reciprocating mechanism for said annular slip support having rotative engagement therewith.

9. A drill spider comprising, a slip bowl, an annular slip support arranged for vertical reciprocation relative to said slip bowl, spaced pipe gripping slips reciprocable within said slip bowl, each of said slips having a first link member pivotally connecting it to an adjacent portion of said slip bowl and a second link member pivotally connecting said first link member to said slip support and a reciprocating mechanism for said annular slip support having rotative engagement therewith.

BENJAMIN F. KELLEY.