(12) INTERNATIONAL APPLICATION PUBLISHED UNDER THE PATENT COOPERATION TREATY (PCT)

(19) World Intellectual Property Organization
International Bureau

(43) International Publication Date
6 November 2014 (06.11.2014)

WIPO | PCT

(10) International Publication Number
WO 2014/179489 A1

(51) International Patent Classification:
H04R 25/00 (2006.01)

(21) International Application Number:
PCT/US2014/036232

(22) International Filing Date:
30 April 2014 (30.04.2014)

(25) Filing Language: English

(26) Publication Language: English

(30) Priority Data:
61/818,380 1 May 2013 (01.05.2013) US

(71) Applicant: **STARKEY LABORATORIES, INC.** [US/US]; 6600 Washington Ave. So., Eden Prairie, MN 55344 (US).

(72) Inventor: **YANG, Jingbo**; 6600 Washington Ave. So., Eden Prairie, MN 55344 (US).

(74) Agents: **BIANCHI, Timothy, E.** et al.; P.O. Box 2938, Minneapolis, MN 55402 (US).

(81) Designated States *(unless otherwise indicated, for every kind of national protection available)*: AE, AG, AL, AM, AO, AT, AU, AZ, BA, BB, BG, BH, BN, BR, BW, BY, BZ, CA, CH, CL, CN, CO, CR, CU, CZ, DE, DK, DM, DO, DZ, EC, EE, EG, ES, FI, GB, GD, GE, GH, GM, GT, HN, HR, HU, ID, IL, IN, IR, IS, JP, KE, KG, KN, KP, KR, KZ, LA, LC, LK, LR, LS, LT, LU, LY, MA, MD, ME, MG, MK, MN, MW, MX, MY, MZ, NA, NG, NI, NO, NZ, OM, PA, PE, PG, PH, PL, PT, QA, RO, RS, RU, RW, SA, SC, SD, SE, SG, SK, SL, SM, ST, SV, SY, TH, TJ, TM, TN, TR, TT, TZ, UA, UG, US, UZ, VC, VN, ZA, ZM, ZW.

(84) Designated States *(unless otherwise indicated, for every kind of regional protection available)*: ARIPO (BW, GH, GM, KE, LR, LS, MW, MZ, NA, RW, SD, SL, SZ, TZ, UG, ZM, ZW), Eurasian (AM, AZ, BY, KG, KZ, RU, TJ, TM), European (AL, AT, BE, BG, CH, CY, CZ, DE, DK, EE, ES, FI, FR, GB, GR, HR, HU, IE, IS, IT, LT, LU, LV, MC, MK, MT, NL, NO, PL, PT, RO, RS, SE, SI, SK, SM, TR), OAPI (BF, BJ, CF, CG, CI, CM, GA, GN, GQ, GW, KM, ML, MR, NE, SN, TD, TG).

Published:

— *with international search report (Art. 21(3))*

WO 2014/179489 A1

(54) Title: ADAPTIVE FEEDBACK CANCELLATION COEFFICIENTS BASED ON VOLTAGE

Fig. 1A

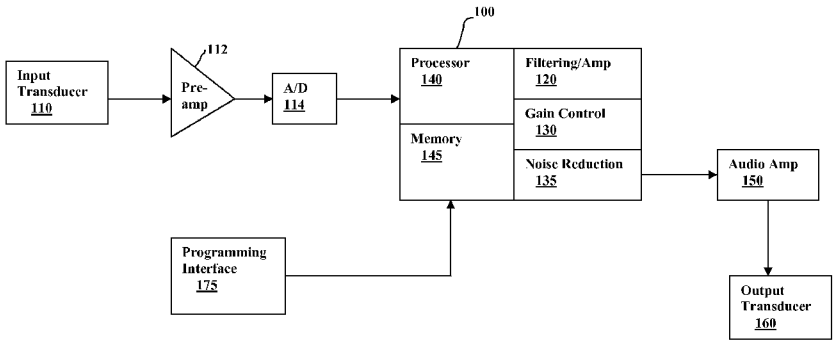

(57) Abstract: In a hearing aid that employs a feedback cancellation (FBC) algorithm, the feedback cancellation may be adversely affected when the FBC coefficients are initialized at one battery voltage and battery voltage subsequently changes as the battery discharges due to the change in the gain of the acoustic feedback path. Described are techniques for to deal with this situation by measuring the battery voltage and applying different offsets to the FBC coefficients as the battery voltage changes.

ADAPTIVE FEEDBACK CANCELLATION COEFFICIENTS BASED ON VOLTAGE

Priority Claim

This application claims priority to United States Provisional Patent Application Serial No. 61/818,380, filed May 1, 2013, which is incorporated herein by reference in its entirety

Field of the Invention

This invention pertains to devices and methods for treating hearing disorders and, in particular, to electronic hearing aids.

Background

Hearing aids are electronic instruments worn in or around the ear that compensate for hearing losses by amplifying and processing sound so as to help people with hearing loss hear better in both quiet and noisy situations. Hearing aids may incorporate feedback cancellation (FBC) circuitry to cancel unwanted acoustic feedback. The FBC circuitry filters the output signal and feeds the filtered signal back to the input in order to cancel the feedback. The FBC coefficients are initialized based upon a measurement of the acoustic feedback path gain. Hearing aids may also incorporate a rechargeable battery whose voltage may vary as the battery discharges. Such varying of the battery voltage may change the sensitivity of the hearing aid receiver which causes the gain of the acoustic feedback path to change and may adversely impact operation of the FBC circuitry.

Brief Description of the Drawings

Fig. 1A is a block diagram of the components of an example hearing aid.

Fig. 1B shows the components of an example hearing as powered by a battery.

Fig. 2 shows an example voltage curve of a rechargeable battery.

Detailed Description

The following detailed description of the present subject matter refers to subject matter in the accompanying drawings which show, by way of illustration, specific aspects and embodiments in which the present subject matter may be practiced. These embodiments are described in sufficient detail to enable those skilled in the art to practice the present subject matter. References to "an", "one", or "various" embodiments in this disclosure are not necessarily to the same embodiment, and such references contemplate more than one embodiment. The following detailed description is demonstrative and not to be taken in a limiting sense. The scope of the present subject matter is defined by the appended claims, along with the full scope of legal equivalents to which such claims are entitled.

A hearing aid is a wearable electronic device for correcting hearing loss by amplifying sound. The electronic circuitry of the device is contained within a housing that is commonly either placed in the external ear canal or behind the ear. Transducers for converting sound to an electrical signal and vice-versa may be integrated into the housing or external to it. The basic components of an example hearing aid are shown in Fig. 1A. A microphone or other input transducer 110 receives sound waves from the environment and converts the sound into an input signal. After amplification by pre-amplifier 112, the signal is sampled and digitized by A/D converter 114. Other embodiments may incorporate an input transducer that produces a digital output directly. The device's signal processing circuitry 100 processes the digitized input signal IS into an analog output signal OS with a digital-to-analog converter (not shown) in a manner that compensates for the patient's hearing deficit. The output signal OS is then passed to an audio amplifier 150 that drives an output transducer 160 for converting the output signal into an audio output, such as a speaker within an earphone.

In the embodiment illustrated in Fig. 1A, the signal processing circuitry 100 includes a programmable controller made up of a processor 140 and associated memory 145 for storing executable code and data. The overall operation of the device is determined by the programming of the controller, which programming may be modified via a programming interface 210. The

programming interface 175 allows user input of data to a parameter modifying area of the memory 145 so that parameters affecting device operation may be changed. The programming interface 175 may allow communication with a variety of devices for configuring the hearing aid such as industry standard programmers, wireless devices, or belt-worn appliances.

The signal processing circuitry 100 may be implemented in a variety of different ways, such as with an integrated digital signal processor or with a mixture of discrete analog and digital components. For example, the signal processing may be performed by a mixture of analog and digital components having inputs that are controllable by the controller that define how the input signal is processed, or the signal processing functions may be implemented solely as code executed by the controller. The terms "controller," "module," or "circuitry" as used herein should therefore be taken to encompass either discrete circuit elements or a processor executing programmed instructions contained in a processor-readable storage medium.

The signal processing modules 120, 130, and 135 may represent specific code executed by the controller or may represent additional hardware components. The processing done by these modules may be performed in the time-domain or the frequency domain. In the latter case, the input signal is discrete Fourier transformed (DFT) prior to processing and then inverse Fourier transformed afterwards to produce the output signal for audio amplification. Any or all of the processing functions may also be performed for a plurality of frequency-specific channels, each of which corresponds to a frequency component or band of the audio input signal. Because hearing loss in most patients occurs non-uniformly over the audio frequency range, most commonly in the high frequency range, the patient's hearing deficit is compensated by selectively amplifying those frequencies at which the patient has a below-normal hearing threshold. The filtering and amplifying module 120 may therefore amplify the input signal in a frequency specific manner. The gain control module 130 dynamically adjusts the amplification in accordance with the amplitude of the input signal to either expand or compress the dynamic range and is sometimes referred to as a compressor. Compression decreases the gain of the filtering and amplifying circuit at high input signal levels so as to avoid

amplifying louder sounds to uncomfortable levels. The gain control module may also apply such compression in a frequency-specific manner. The noise reduction module 135 performs functions such as suppression of ambient background noise and feedback cancellation.

Feedback cancellation

Audible feedback is among the most prominent problems with hearing aids. Acoustic feedback occurs when the output of the receiver leaks out of the ear canal and enters the microphone of the hearing aid. This acoustic leakage may be through a vent or slit that leaks around the edges of the hearing aid. Together, these sources of leakage constitute the acoustic feedback path. Each time sound leaks out of the ear canal and enters the microphone, it is re-amplified along with all the other sounds entering the hearing aid. This does not pose a problem as long as the physical presence of the hearing aid attenuates the acoustic leakage by more than the gain of the hearing aid. When the gain exceeds this attenuation, the feedback signal grows each time it goes around the loop and ultimately becomes strong enough to create an audible oscillation. The conditions necessary for audible feedback oscillation are met when the degree of attenuation is small and/or when the gain of the hearing aid is high.

Rather than manipulating the gain to reduce feedback, feedback cancellation (FBC) algorithms introduce an additional signal to cancel out the acoustic leakage. When feedback is detected at the output of the hearing aid, a cancellation signal is generated to mimic the feedback. The feedback is eliminated by subtracting the cancellation signal from the input. Maximum stable gain (MSG) refers to the maximum amount of gain that can be provided by a hearing aid without risk of audible feedback or degraded sound quality. Since FBC algorithms simply cancel out unwanted feedback, there is no gain reduction associated with eliminating feedback. On the contrary, this technique should result in what is referred to as added stable gain (ASG) - i.e., an increase in MSG with FBC enabled relative to that with FBC disabled.

The cancellation signal of the FBC algorithm is generated based upon the characteristics of the acoustic feedback path. The acoustic feedback path refers to all the ways in which sound can leak out of the ear canal and re-enter the

hearing aid microphone. The FBC algorithm may respond dynamically to changes in the acoustic feedback path, but it is desirable for the algorithm to be configured to also operate based upon characteristics of the feedback path that are constant, referred to as static feedback paths. Information about static feedback paths, such as vents, may be gathered by means of an initialization performed in the clinic. During initialization, a broadband noise with a known spectrum - typically white noise - is played through the hearing aid. A comparison of the frequency response of the initialization signal at the source and that detected at the microphone of the hearing aid indicates the amount of attenuation provided by the hearing aid and the frequency regions in which feedback is most likely to pose a problem. The filter coefficients used by the FBC algorithm may then be adjusted appropriately to reduce the feedback.

Voltage-based adjustment of FBC coefficients

Fig. 1B shows the components of the example hearing aid that includes a battery 195 for supplying power to the electronic components. The signal processing circuitry is configured to perform feedback cancellation as described above. A study on the interaction between a rechargeable battery and FBC has shown that FBC may be adversely affected when the FBC coefficients are initialized at one battery voltage and battery voltage subsequently changes as the battery discharges to change the gain of the acoustic feedback path. To deal with this situation, in one embodiment, the discharge curve of the rechargeable battery is divided into a plurality of stages, with each stage representing a particular voltage range. For each stage, an offset is defined for adjusting the coefficients of the FBC filter to take into account the change in the acoustic feedback path gain brought about by the changing battery voltage. The offsets may be defined in a frequency-specific manner for a plurality of subbands. In one embodiment, the FBC coefficients are initialized based upon a particular battery voltage. As the battery discharges and moves through the defined stages (as determined by measuring the battery voltage), the hearing aid is configured to apply different offsets to the FBC coefficients. In another embodiment, the hearing aid is configured to measure the voltage of the battery during operation,

and the FBC coefficients are then generated as a function of the battery voltage, using a look-up table or based upon a numerical calculation.

Fig. 2 shows an example of a voltage curve for a rechargeable battery (silver-zinc) as compared with a non-rechargeable battery (zinc-air). In one embodiment, the voltage level of the rechargeable battery is divided into three stages as follows:

- Stage I: >1.6V
- Stage II: 1.5V<*<1.6V
- Over-discharged stage: <1.5V

High voltage level (~1.8V in stage I and ~1.5V in stage II) of rechargeable battery increases receiver sensitivity. As receiver is a part of feedback path, the FBC subband coefficients from FBC initialization, which is measured when voltage level is 1.25V, must be adjusted properly to account for rechargeable battery stages.

In one embodiment, different offsets are applied to the FBC subband coefficients to get overall best performance of FBC. For example, when the rechargeable battery is in stage I (1.6V~1.8V), the best offset may be applied for the FBC subband coefficients that can work well when voltage level is varying from 1.8V to 1.6V. The best offset from an example experiment shows +2.25dB offset is the best value for stage I, and the best offset for stage II is +0.75dB. For the over-discharged stage, no offset is applied in one embodiment.

Example embodiments

In one embodiment, a hearing aid, comprises: an input transducer for converting sound into an input signal; signal processing circuitry for filtering and amplifying the input signal in to produce an output signal; an output transducer for converting the output signal into sound; wherein the signal processing circuitry is configured to implement a feedback cancellation algorithm; a battery for providing power to the hearing aid; and

wherein the signal processing circuitry is configured to adjust feedback cancellation coefficients used by the feedback cancellation algorithm based upon a measured voltage of the battery. The battery may be a rechargeable battery

such as a silver-zinc rechargeable battery. The signal processing circuitry may be configured to detect feedback in the output signal, generate a cancellation signal as a function of the detected feedback and the feedback cancellation coefficients, and subtract the cancellation signal from the input signal. The signal processing circuitry may be configured to generate cancellation signals in a frequency-specific manner for a plurality of subbands. The signal processing circuitry may be configured to adjust the feedback cancellation coefficients in accordance with an offset computed as a numerical function of the measured battery voltage and may be configured to compute the offset from a look-up table that maps measured battery voltages to an offset values. The feedback cancellation coefficients may be initialized based upon a particular battery voltage. The signal processing circuitry may be configured to, as the battery discharges and moves through stages defined with respect to the measured battery voltage), apply different offsets to the feedback cancellation coefficients.

Various embodiments of the present subject matter support wireless communications with a hearing assistance device. In various embodiments the wireless communications can include standard or nonstandard communications. Some examples of standard wireless communications include link protocols including, but not limited to, Bluetooth™, IEEE 802.11(wireless LANs), 802.15 (WPANs), 802.16 (WiMAX), cellular protocols including, but not limited to CDMA and GSM, ZigBee, and ultra-wideband (UWB) technologies. Such protocols support radio frequency communications and some support infrared communications. Although the present system is demonstrated as a radio system, it is possible that other forms of wireless communications can be used such as ultrasonic, optical, and others. It is understood that the standards which can be used include past and present standards. It is also contemplated that future versions of these standards and new future standards may be employed without departing from the scope of the present subject matter.

The wireless communications support a connection from other devices. Such connections include, but are not limited to, one or more mono or stereo connections or digital connections having link protocols including, but not limited to 802.3 (Ethernet), 802.4, 802.5, USB, ATM, Fibre-channel, Firewire or 1394, InfiniBand, or a native streaming interface. In various embodiments, such

connections include all past and present link protocols. It is also contemplated that future versions of these protocols and new future standards may be employed without departing from the scope of the present subject matter.

It is understood that variations in communications protocols, antenna configurations, and combinations of components may be employed without departing from the scope of the present subject matter. Hearing assistance devices typically include an enclosure or housing, a microphone, hearing assistance device electronics including processing electronics, and a speaker or receiver. It is understood that in various embodiments the microphone is optional. It is understood that in various embodiments the receiver is optional. Antenna configurations may vary and may be included within an enclosure for the electronics or be external to an enclosure for the electronics. Thus, the examples set forth herein are intended to be demonstrative and not a limiting or exhaustive depiction of variations.

It is further understood that any hearing assistance device may be used without departing from the scope and the devices depicted in the figures are intended to demonstrate the subject matter, but not in a limited, exhaustive, or exclusive sense. It is also understood that the present subject matter can be used with a device designed for use in the right ear or the left ear or both ears of the wearer.

It is understood that the hearing aids referenced in this patent application include a processor. The processor may be a digital signal processor (DSP), microprocessor, microcontroller, other digital logic, or combinations thereof. The processing of signals referenced in this application can be performed using the processor. Processing may be done in the digital domain, the analog domain, or combinations thereof. Processing may be done using subband processing techniques. Processing may be done with frequency domain or time domain approaches. Some processing may involve both frequency and time domain aspects. For brevity, in some examples drawings may omit certain blocks that perform frequency synthesis, frequency analysis, analog-to-digital conversion, digital-to-analog conversion, amplification, and certain types of filtering and processing. In various embodiments the processor is adapted to perform instructions stored in memory which may or may not be explicitly shown.

Various types of memory may be used, including volatile and nonvolatile forms of memory. In various embodiments, instructions are performed by the processor to perform a number of signal processing tasks. In such embodiments, analog components are in communication with the processor to perform signal tasks, such as microphone reception, or receiver sound embodiments (i.e., in applications where such transducers are used). In various embodiments, different realizations of the block diagrams, circuits, and processes set forth herein may occur without departing from the scope of the present subject matter.

The present subject matter is demonstrated for hearing assistance devices, including hearing aids, including but not limited to, behind-the-ear (BTE), in-the-ear (ITE), in-the-canal (ITC), receiver-in-canal (RIC), or completely-in-the-canal (CIC) type hearing aids. It is understood that behind-the-ear type hearing aids may include devices that reside substantially behind the ear or over the ear. Such devices may include hearing aids with receivers associated with the electronics portion of the behind-the-ear device, or hearing aids of the type having receivers in the ear canal of the user, including but not limited to receiver-in-canal (RIC) or receiver-in-the-ear (RITE) designs. The present subject matter can also be used in hearing assistance devices generally, such as cochlear implant type hearing devices and such as deep insertion devices having a transducer, such as a receiver or microphone, whether custom fitted, standard, open fitted or occlusive fitted. It is understood that other hearing assistance devices not expressly stated herein may be used in conjunction with the present subject matter.

This application is intended to cover adaptations or variations of the present subject matter. It is to be understood that the above description is intended to be illustrative, and not restrictive. The scope of the present subject matter should be determined with reference to the appended claims, along with the full scope of legal equivalents to which such claims are entitled.

The subject matter has been described in conjunction with the foregoing specific embodiments. It should be appreciated that those embodiments may also be combined in any manner considered to be advantageous. Also, many

alternatives, variations, and modifications will be apparent to those of ordinary skill in the art. Other such alternatives, variations, and modifications are intended to fall within the scope of the following appended claims.

What is claimed is:

1. A hearing aid, comprising:

an input transducer for converting sound into an input signal;

signal processing circuitry for filtering and amplifying the input signal in to produce an output signal,

an output transducer for converting the output signal into sound;

wherein the signal processing circuitry is configured to implement a feedback cancellation algorithm;

a battery for providing power to the hearing aid; and

wherein the signal processing circuitry is configured to adjust feedback cancellation coefficients used by the feedback cancellation algorithm based upon a measured voltage of the battery.

2. The hearing aid of claim 1 wherein the battery is a rechargeable battery.

3. The hearing aid of claim 2 wherein the rechargeable battery is silver-zinc rechargeable battery.

4. The hearing aid of claim 1 wherein the signal processing circuitry is configured to detect feedback in the output signal, generate a cancellation signal as a function of the detected feedback and the feedback cancellation coefficients, and subtract the cancellation signal from the input signal.

5. The hearing aid of claim 4 wherein the signal processing circuitry is configured to generate cancellation signals in a frequency-specific manner for a plurality of subbands.

6. The hearing aid of claim 1 wherein the signal processing circuitry is configured to adjust the feedback cancellation coefficients in accordance with an offset computed as a numerical function of the measured battery voltage.

7. The hearing aid of claim 6 wherein the signal processing circuitry is configured to compute the offset from a look-up table that maps measured battery voltages to an offset values.

8. The hearing aid of claim 6 wherein the signal processing circuitry is configured with feedback cancellation coefficients initialized based upon a particular battery voltage.

9. The hearing aid of claim 1 wherein the signal processing circuitry is configured to, as the battery discharges and moves through stages defined with respect to the measured battery voltage), apply different offsets to the feedback cancellation coefficients.

10. The hearing aid of claim 9 wherein the signal processing circuitry is configured such that the voltage level of the battery is divided into three stages as follows:

Stage I: >1.6V
Stage II: 1.5V<*<1.6V
Over-discharged stage: <1.5V

wherein an offset for applying to the feedback cancellation coefficients is computed for each stage.

11. A method for operating hearing aid, comprising:

filtering and amplifying an input signal in to produce an output signal that is converted into sound;

implementing a feedback cancellation algorithm;

adjusting feedback cancellation coefficients used by the feedback cancellation algorithm based upon a measured voltage of a battery used to power the hearing aid.

12. The method of claim 11 wherein the battery is a rechargeable battery.

13. The method of claim 12 wherein the rechargeable battery is silver-zinc rechargeable battery.

14. The method of claim 11 wherein the feedback cancellation algorithm comprises detecting feedback in the output signal, generating a cancellation signal as a function of the detected feedback and the feedback cancellation coefficients, and subtracting the cancellation signal from the input signal.

15. The method of claim 14 further comprising generating cancellation signals in a frequency-specific manner for a plurality of subbands.

16. The method of claim 11 further comprising adjusting the feedback cancellation coefficients in accordance with an offset computed as a numerical function of the measured battery voltage.

17. The method of claim 16 further comprising computing the offset from a look-up table that maps measured battery voltages to an offset values.

18. The method of claim 16 further comprising initializing the feedback cancellation coefficients based upon a particular battery voltage.

19. The method of claim 11 further comprising, as the battery discharges and moves through stages defined with respect to the measured battery voltage), applying different offsets to the feedback cancellation coefficients.

20. The method of claim 19 wherein the voltage level of the battery is divided into three stages as follows:

Stage I: >1.6V
Stage II: 1.5V<*<1.6V
Over-discharged stage: <1.5V

wherein an offset for applying to the feedback cancellation coefficients is computed for each stage.

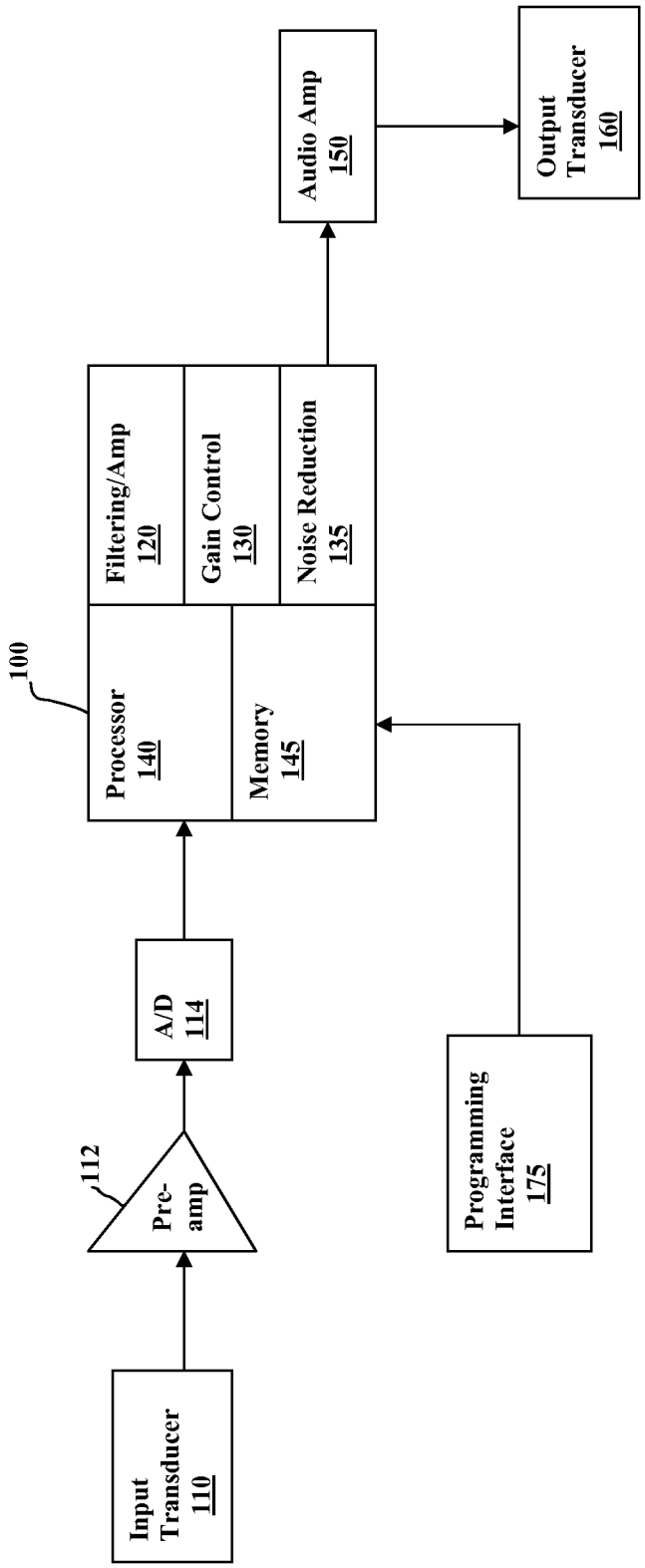
Input Transducer 110
112
Pre-amp
A/D 114
Processor 140
Memory 145
Filtering/Amp 120
Gain Control 130
Noise Reduction 135
100
Audio Amp 150
Output Transducer 160
Programming Interface 175

Fig. 1A

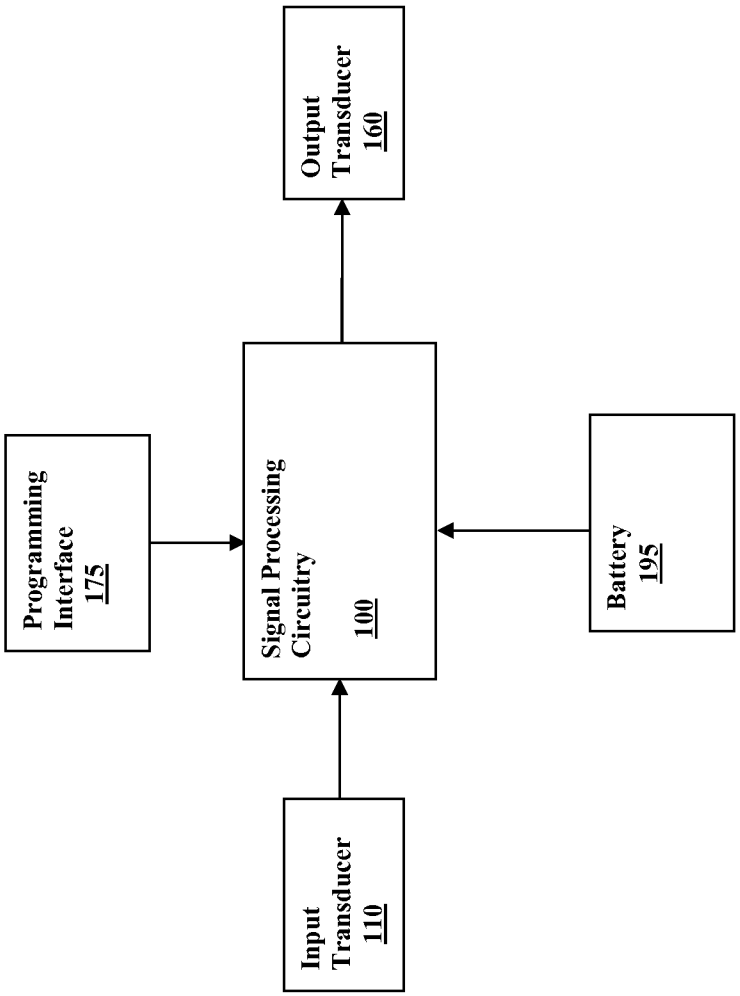
Output Transducer 160
Programming Interface 175
Signal Processing Circuitry 100
Battery 195
Input Transducer 110

Fig. 1B

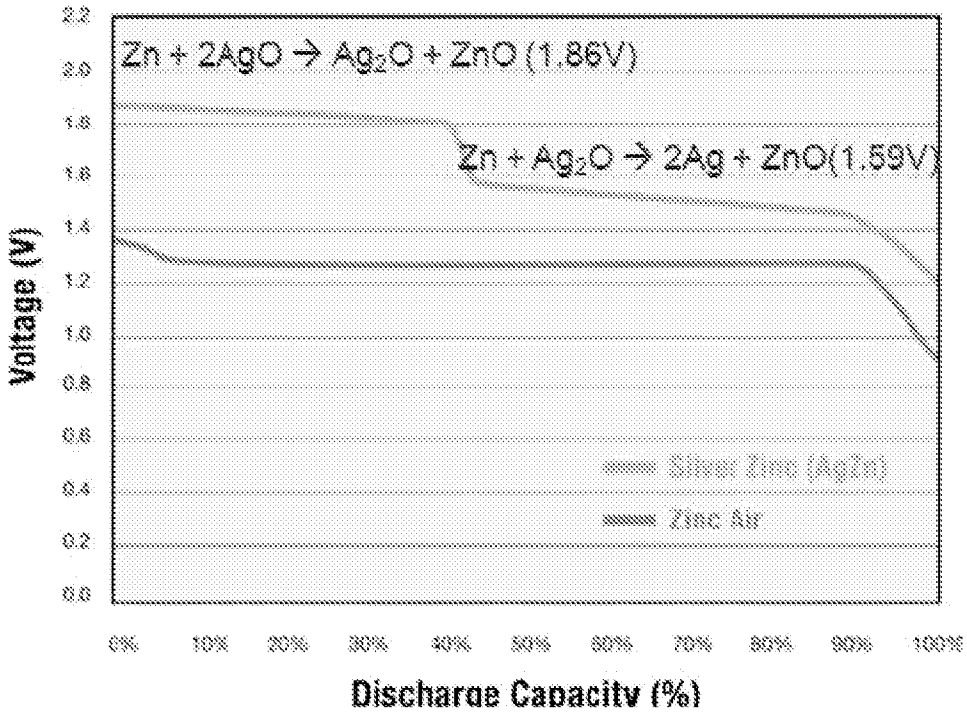
Zn + 2AgO → Ag2O + ZnO (1.86V)
Zn + Ag2O → 2Ag + ZnO(1.59V)
Voltage (V)
2.2
2.0
1.8
1.6
1.4
1.2
1.0
0.8
0.6
0.4
0.2
0.0
0%
10%
20%
30%
40%
50%
60%
70%
80%
90%
100%
Discharge Capacity (%)
Silver Zinc (Ag/Zn)
Zinc Air

Fig. 2

INTERNATIONAL SEARCH REPORT

International application No
PCT/US2014/036232

A. CLASSIFICATION OF SUBJECT MATTER
INV. H04R25/00
ADD.

According to International Patent Classification (IPC) or to both national classification and IPC

B. FIELDS SEARCHED

Minimum documentation searched (classification system followed by classification symbols)
H04R H02J

Documentation searched other than minimum documentation to the extent that such documents are included in the fields searched

Electronic data base consulted during the international search (name of data base and, where practicable, search terms used)

EPO-Internal, WPI Data

C. DOCUMENTS CONSIDERED TO BE RELEVANT

Category*	Citation of document, with indication, where appropriate, of the relevant passages	Relevant to claim No.
Y	EP 2 439 958 A1 (OTICON AS [DK]) 11 April 2012 (2012-04-11) paragraph [0066] paragraph [0067] figure 1c page 12, line 5 - line 8 -----	1-20
Y	WO 03/026348 A1 (MICROSOUND AS [DK]; PEDERSEN SOEREN LOUIS [DK]) 27 March 2003 (2003-03-27) page 1, line 5 - line 7 page 1, line 32 - page 2, line 5 page 3, line 18 - line 22 page 12, line 23 - line 27 ----- -/--	1-20

[X] Further documents are listed in the continuation of Box C.

[X] See patent family annex.

* Special categories of cited documents :

"A" document defining the general state of the art which is not considered to be of particular relevance

"E" earlier application or patent but published on or after the international filing date

"L" document which may throw doubts on priority claim(s) or which is cited to establish the publication date of another citation or other special reason (as specified)

"O" document referring to an oral disclosure, use, exhibition or other means

"P" document published prior to the international filing date but later than the priority date claimed

"T" later document published after the international filing date or priority date and not in conflict with the application but cited to understand the principle or theory underlying the invention

"X" document of particular relevance; the claimed invention cannot be considered novel or cannot be considered to involve an inventive step when the document is taken alone

"Y" document of particular relevance; the claimed invention cannot be considered to involve an inventive step when the document is combined with one or more other such documents, such combination being obvious to a person skilled in the art

"&" document member of the same patent family

Date of the actual completion of the international search	Date of mailing of the international search report
24 July 2014	31/07/2014

Name and mailing address of the ISA/	Authorized officer
European Patent Office, P.B. 5818 Patentlaan 2 NL - 2280 HV Rijswijk Tel. (+31-70) 340-2040, Fax: (+31-70) 340-3016	Mendoza Lopez, Jorge

1

Form PCT/ISA/210 (second sheet) (April 2005)

INTERNATIONAL SEARCH REPORT

International application No
PCT/US2014/036232

C(Continuation). DOCUMENTS CONSIDERED TO BE RELEVANT

Category*	Citation of document, with indication, where appropriate, of the relevant passages	Relevant to claim No.
A	US 2010/246868 A1 (KORNAGEL ULRICH [DE]) 30 September 2010 (2010-09-30) paragraph [0002] paragraph [0009] -----	1-20
A	WO 96/35314 A1 (TOEPHOLM & WESTERMANN [DK]; TOEPHOLM JAN [DK]) 7 November 1996 (1996-11-07) page 4, line 5 - line 15 -----	1-20
A	EP 1 289 143 A2 (TEKTRONIX INC [US]) 5 March 2003 (2003-03-05) abstract paragraph [0005] -----	1-20

1

INTERNATIONAL SEARCH REPORT

Information on patent family members

International application No
PCT/US2014/036232

Patent document cited in search report	Publication date	Patent family member(s)	Publication date
EP 2439958 A1	11-04-2012	AU 2011226939 A1	26-04-2012
		CN 102447992 A	09-05-2012
		DK 2439958 T3	12-08-2013
		EP 2439958 A1	11-04-2012
		US 2012087509 A1	12-04-2012
WO 03026348 A1	27-03-2003	AT 347245 T	15-12-2006
		DE 60216486 T2	04-10-2007
		DK 1428412 T3	02-04-2007
		EP 1428412 A1	16-06-2004
		US 2004247148 A1	09-12-2004
		WO 03026348 A1	27-03-2003
US 2010246868 A1	30-09-2010	DE 102009014540 A1	07-10-2010
		EP 2234411 A1	29-09-2010
		US 2010246868 A1	30-09-2010
WO 9635314 A1	07-11-1996	AT 171833 T	15-10-1998
		AU 698105 B2	22-10-1998
		CA 2215764 A1	07-11-1996
		DE 69505155 D1	05-11-1998
		DE 69505155 T2	15-04-1999
		DK 0824845 T3	21-06-1999
		EP 0824845 A1	25-02-1998
		JP 3398156 B2	21-04-2003
		JP H11505077 A	11-05-1999
		US 5991417 A	23-11-1999
		WO 9635314 A1	07-11-1996
EP 1289143 A2	05-03-2003	CN 1407720 A	02-04-2003
		EP 1289143 A2	05-03-2003
		JP 4159318 B2	01-10-2008
		JP 2003133909 A	09-05-2003
		US 2003031281 A1	13-02-2003