July 5, 1938. J. T. PHIPPS 2,122,751

JAR

Filed Nov. 2, 1935 2 Sheets-Sheet 1

Fig. 1

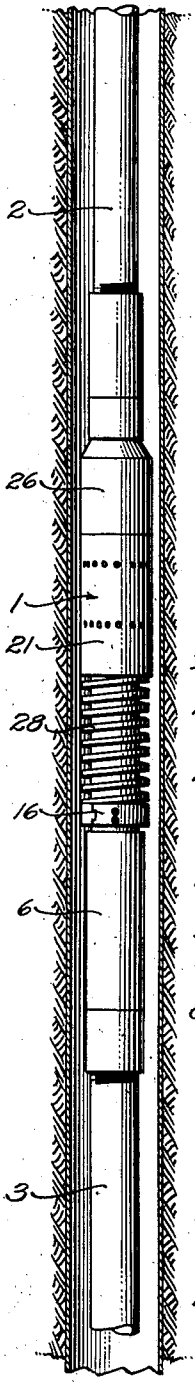

Fig. 2

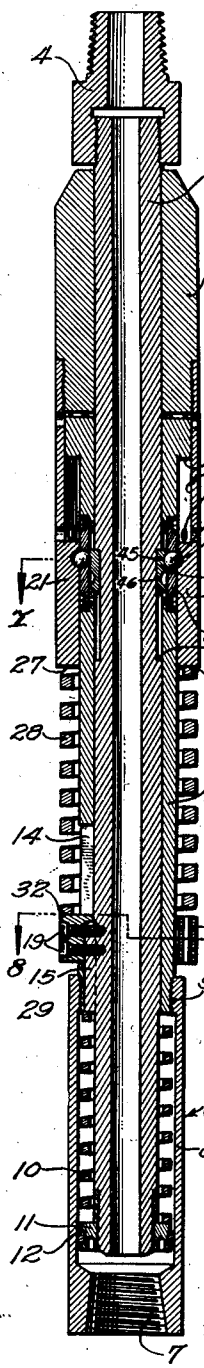

Fig. 4

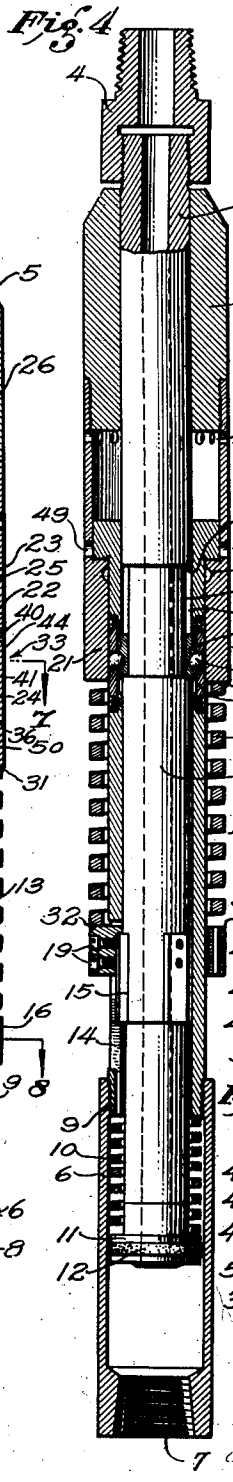

Fig. 7

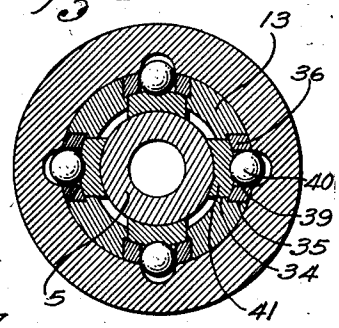

Fig. 8

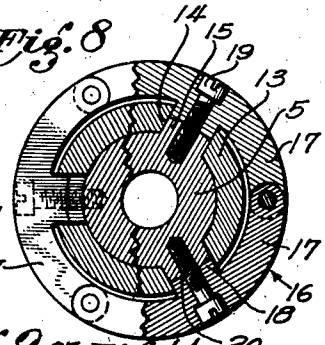

Fig. 9

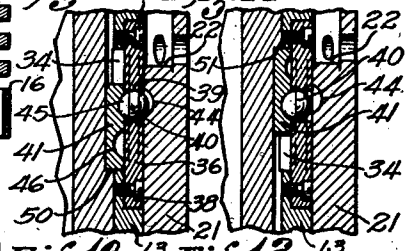

Fig. 11

Fig. 10

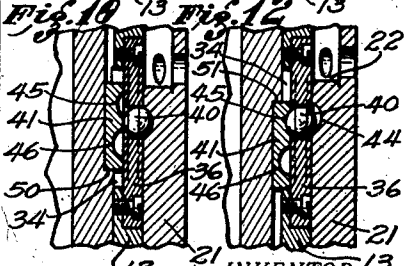

Fig. 12

INVENTOR
JOHN T. PHIPPS

ATTORNEY

July 5, 1938. J. T. PHIPPS 2,122,751

JAR

Filed Nov. 2, 1935 2 Sheets-Sheet 2

Fig. 3

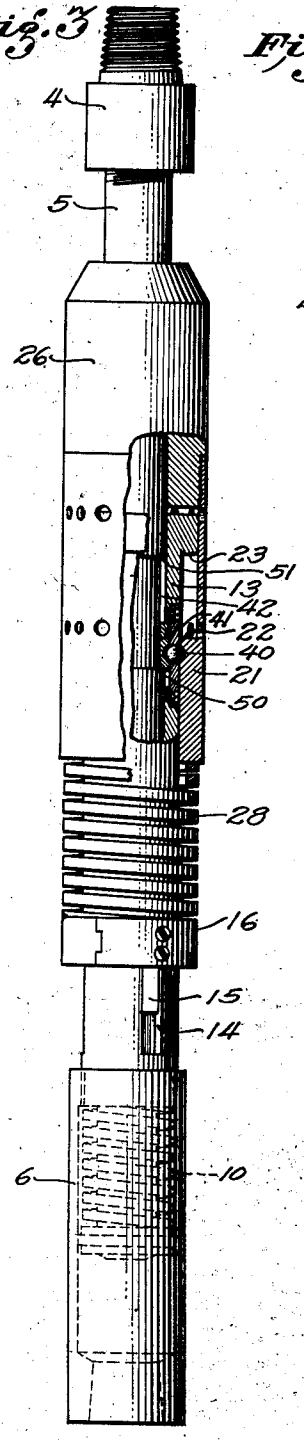

Fig. 5

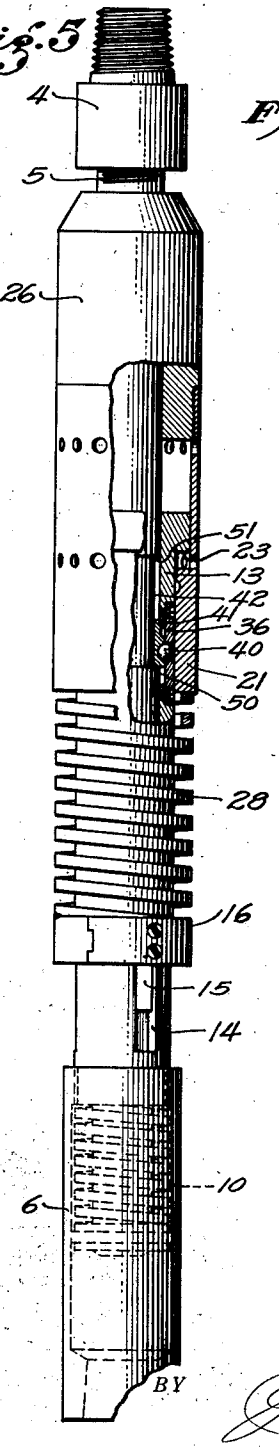

Fig. 6

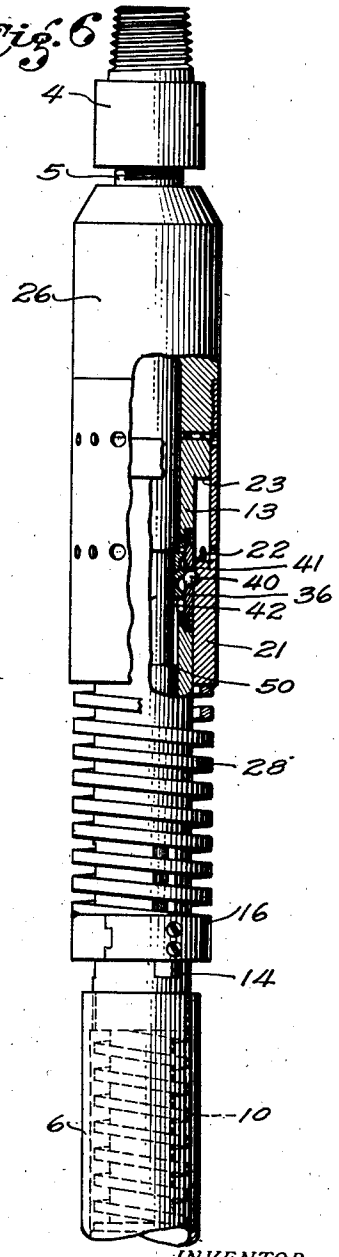

INVENTOR
JOHN T. PHIPPS

BY Galvin Brown,
ATTORNEY

Patented July 5, 1938 2,122,751

UNITED STATES PATENT OFFICE

2,122,751

JAR

John T. Phipps, Huntington Park, Calif., assignor to Halliburton Oil Well Cementing Company, a corporation of Delaware

Application November 2, 1935, Serial No. 47,991

14 Claims. (Cl. 255—27)

This invention relates to jars of the type which may be utilized for well practices, for the purpose of dislodging any element or device within a well which has become frozen or otherwise immovable.

The present jar may be incorporated within a drill string and when so incorporated may act in conjunction with a bit, or the like, and thus become what is known as a drilling jar, or the said jar may not be so incorporated with a bit but secured to the drilling string and the usual jar bars when it becomes necessary to use the jar.

At the present time, there are many types and forms of jars on the market and in use, but in general said jars are divided into two classes, to-wit: cable tool and rotary. The rotary jar is distinguished from the cable tool in that it is provided with a circulation bore or opening whereby the drilling mud may be passed therethrough to the zone of the "fish". These rotary jars, so-called, generally divide themselves into several classes, to-wit: a form in which the jar must be rotated a given amount to allow impacting surfaces to contact after a stretch is taken in the drill pipe; the straight rigid type of jar which impacts during rotation thereof without stretch in the pipe; and lastly, the straight pull type jar which releases and allows impacting surfaces to contact when a predetermined stretch is taken in the drill pipe. All of the different classes of rotary jars, as just classified, are subject to certain disadvantages, in that the rigid type does not permit sufficient jarring action, the rotary release type after a stretch in the drill pipe imposes undue torsion in the drill pipe, with possible uncoupling or breaking of the coupling threads, while the straight pull type is subjected to rapid wear, particularly in the clutch elements thereof.

With my invention, the difficulties inherent, as above stated, are effectively overcome, and the present invention has for an object the provision of a jar which may be rapidly actuated to produce a strong jarring action sufficient to free the "fish".

Another object is the provision of a jar having few working parts, the parts of which are not liable to be damaged in actual use, the operating mechanism of which jar is readily accessible to a mechanic, which is positive in its operation, reliable in use and service, does not impose any torsion in the drilling string, and is otherwise generally superior to jars now known to the inventor.

As a brief outline of the invention, it is proposed to utilize a spring for actuating the striking abutments. Through the medium of a simple control, after a given stretch is taken in the drill pipe to compress the said spring, one of the abutments is released to cause a striking thereof against the other abutment. Upon again lowering the drill pipe slightly, the abutments are separated and the device ready for a second blow.

A further object of the invention is the provision of a jar which may be utilized within casing of small diameter. Heretofore, it has been impossible to utilize so-called standard type rotary jars within small diameter casing, but a jar of the character of this invention may be placed within casing having an internal diameter of an inch and a half, and still perform the function required of it in an efficient manner.

With the above set forth objects in view, the invention consists in the novel and useful provision, formation, construction, association, and relative arrangement of parts, members and features, all as shown in certain embodiments in the accompanying drawings, described generally, and more particularly pointed out in the claims.

In the drawings:

Figure 1 is a fragmentary view of casing in longitudinal section, within which casing is the improved jar of this invention shown coupled between lengths of drill pipe,

Figure 2 is an enlarged longitudinal sectional view of the improved jar, the parts being in one position, the striking abutments being separated,

Figure 3 is a fragmentary partially sectional elevation of the jar, the parts being shown in the position assumed prior to release of a striking abutment to produce a jarring action,

Figure 4 is a longitudinal sectional view of the jar, the striking abutments being in contact, and showing the position of the jar parts upon release of the members from the position shown in Figure 3,

Figure 5 is a fragmentary elevation of the jar, certain parts being shown in section, showing the position of certain of the members after a blow has been struck by the striking abutments,

Figure 6 is a fragmentary elevation of the jar, certain parts being in section showing the position of certain elements of the invention, the striking abutments being separated and the locking mechanism in a changed position from that shown in Figure 5,

Figure 7 is a sectional view on the line 7—7 of Figure 2,

Figure 8 is a sectional view on the line 8—8 of Figure 2, and

Figures 9 to 12, inclusive, are fragmentary sectional views on an enlarged scale from the showing of the other figures, and illustrating different positions for the locking members of the jar.

Referring to the drawings, the improved jar is designated as an entirety by the numeral 1, and the same may be secured to a drill string 2, which term is used in its generic sense as including either drill pipe or cable to thereby adapt the invention either for rotary drilling or cable tool operation. The said jar 1 in turn is secured to a further length of pipe 3 which, in turn, may be secured to a "fish" or a bit, as the case may be, and depending on whether or not the device is used as a drill jar or adapted to be inserted in the well hole in the event that the bit should become stuck and for engagement with the "fish" in the ordinary and well understood manner.

The present jar as shown is adapted for use with a drilling string of the type wherein the drill pipe is adapted to have mud or other fluid forced through the same and through the jar and outwardly at the zone of the "fish".

The present jar operates on the principle of taking tension on certain elements of the jar and when a predetermined tension has been taken upon an element or elements of the jar, abutments are adapted to co-engage for the purpose of producing a jarring action upon the "fish" to loosen the same.

It is also believed that the jar is novel in the method of holding the various elements of the jar in a defined position until the striking abutments are released for striking engagement.

Referring to Figure 2, the said jar includes a pin 4 secured to one end of a tubular mandrel 5. This tubular mandrel has a portion thereof received within a member 6, the said member having a threaded box portion 7 at one end, a tubular side wall 8, and an internally threaded end 9. The mandrel is adapted to have a portion thereof received within the confines of the member 6. Surrounding the mandrel and within the member 6 is a coiled helical spring 10, one end of the said mandrel having threaded thereto a collar 11 provided with a ring gasket 12 adapted to engage the inner surface of the member 6. One end of the spring engages the member 11 for limiting movement of the spring in one direction and the opposite end of said spring engages a sleeve 13 threaded to the threads 9. The sleeve 13 is provided with one or more spaced longitudinal slots or ways 14, and the said mandrel 5 is provided with integrally formed longitudinal keys 15 in part received within said slots or ways 14. Surrounding the sleeve is a collar 16. This collar is made up of hingedly connected sectors 17. Intermediate the hinge portions are inwardly extending keys 18, which keys are received within the ways 14 of the sleeve. The collar is held in position of assemblage to the said sleeve by means of one or more bolts 19 passed through the collar and into the sleeve at the zones of the keys, as illustrated at 20 in Figure 8. It is, therefore, evident that the collar and mandrel may move in one direction relative to the sleeve 13, it being observed that the way or ways 14 of said sleeve are of extended length, and furthermore, that independent rotation between the sleeve and mandrel is prevented by the construction just described. In part surrounding the sleeve 13 is a hammer sleeve 21, so termed because the abutment surface 22 is adapted to strike an anvil member 23 formed on one end of the sleeve 13. The hammer sleeve is thickened, at 24, and internally enlarged as to diameter at 25. This sleeve is screw-threaded to a tubular member 26 surrounding the mandrel 5. Adapted to surround the sleeve 13 and interposed between the collar 16 and the end 27 of the hammer sleeve is a coiled helical spring 28.

One end of the spring 28 is welded or otherwise secured to the end 27 of the hammer sleeve, as shown at 31, and the opposite end of said spring is welded or otherwise secured at 32 to the collar 16.

Releasable locking means for releasing the hammer to strike the anvil is designated generally as 33 and operates in conjunction with the hammer sleeve 21, the anvil sleeve 13, and the mandrel 5. Reference is directed to Figure 7 wherein it is shown that the anvil sleeve is provided with spaced-apart longitudinally stepped slots 34 and 35. As stated, there may be a plurality of said locking means, and as all of the said means are similar in construction, one thereof will be described. A detent carrier 36 is secured in the stepped slot 35 in any suitable manner, such as by screws shown at 37 and 38 (see Figures 9 to 12, inclusive). The periphery of this detent carrier is curved to conform to the curvature of the sleeve 13. This detent carrier is provided with a transverse bore or recess 39 and within said recess is a ball detent 40. Received in part within the stepped slot 34 is a keeper plate 41. This keeper plate 41 is provided with two curved face portions adapted to conform to the curvature of both the mandrel and the detent carrier. In this respect, attention is invited to Figure 4 which shows that the mandrel is likewise reduced in diameter for a portion of its longitudinal length at 42, and that the keeper plate is received within the annular space included between the reduced diameter portion 42 and the hammer sleeve, this annular space being designated as 43. Also, the keeper plate has limited longitudinal movement within the stepped slot 34, this slot being of greater length than the length of the said keeper plate as shown in Figures 9 to 12. Within the hammer sleeve is one or more semi-circular sockets or recesses 44. Each keeper plate is provided with two concavities or sockets or recesses 45 and 46, the concavity 46 being of greater depth than that of 45, and the sockets 44 and 46 are substantially of the same depth.

The hammer sleeve is provided with an annular series of transverse bores 47 at zones 48 and 49. These bores provide a ready means for maintaining the space included between the hammer sleeve and the periphery of the mandrel free from debris or other material which might interfere with the operation of the hammer when the hammer sleeve is moved in one direction, and likewise for clearing any material in the space included between the hammer sleeve and the anvil sleeve, when the hammer is moved in a second direction.

The operation, uses and advantages of the invention just disclosed are as follows:

Assume the parts of the jar in the position shown in Figure 2, which position corresponds to the position shown likewise in Figure 1. Each ball detent 40 is interposed between the socket 45 of the keeper plate and socket 44 of the hammer sleeve. As the socket 45 is shallow compared to the socket 44, the detent will be urged into socket 44, it being observed that the detent has a diameter greater than the transverse width of the detent carrier so that the ball extends outwardly beyond both sides of said detent carrier in the position shown in Figure 2. The diameter of the

detent is such that when it is fully received within the socket 44, its periphery will be substantially flush with the inner face of the detent carrier (see Figure 10), and when the hammer sleeve and detent carrier is in a second position, the detent will be received within the socket 46 with its surface flush with the outer surface of the detent carrier, as shown in Figure 11. Hence, it may be said that the recess or bore of the detent carrier, when in alignment with either the socket 44 or 46, has a combined depth equal to the diameter of the ball detent.

Again referring to Figure 2, the detents are urged within the sockets 44 and likewise received in part within the sockets 45. However, as these sockets 45 are shallow, the detent is prevented from escaping from the sockets 44 (see Figures 7 and 9). In this position, the hammer is spaced from the anvil. It is also intended that the spring 28 should be under slight tension when the jar parts are in the position shown. If now it is assumed that the jar is secured to a "fish" and likewise to a drilling string, tension may be taken on the drilling string 2. As the "fish" or a member 3 secured to the "fish" is connected to the member 6, the member 6 together with the anvil sleeve 13 does not move. However, the mandrel will be moved upwardly by the drill string 2, which will compress the springs 10 and 28. The detent will remain in the position shown in Figure 2 as the mandrel moves upwardly, for the reason that the keeper plate is in part confined within the annular space 43. After the mandrel has moved upwardly a given distance, the lower shoulder 50 included between the portion of reduced diameter 42 and the main diameter of the mandrel, will strike the lower end of the keeper plate. When this occurs, further upward movement of the mandrel will cause the keeper plate to force the ball or balls 40 fully into the socket or sockets 44, of the hammer sleeve. This is true for the reason that the axis of the detent in the position shown both in Figures 2 and 9 is substantially intermediate the recess of the detent carrier, while the edge of the keeper plate is eccentric to the axis of said ball and, therefore, will tend to move the said ball or detent into the socket 44. Thus, upon further upward movement of the mandrel, the parts will assume the position shown in Figure 10, in which position it will be observed that the anvil sleeve and the hammer sleeve are still locked against relative movement. As upward movement of the mandrel continues, a position will be reached when the detent will lie between the sockets 44 and 46, and when this position is reached, the detent is readily movable by action of the edge of the hammer sleeve bounding the socket 44 to move the said detent into the socket 46, due to the fact that the detent has its axis again substantially central of the detent carrier and the edge of the hammer sleeve bounding the socket 44 is eccentric to said detent center. When this position is reached, the hammer sleeve is suddenly released and the hammer will strike the anvil, as shown by Figure 4. It is thus seen that advantage is taken of the compression in the springs and particularly the spring 28, with the result that a blow of considerable magnitude may be delivered to the "fish". When it is desired to re-set the jar for a further blow, the spring 28 by always being maintained under slight tension, and likewise by being secured to the hammer sleeve, and the collar 16, will urge the hammer sleeve in a downward direction to the position shown in Figure 5. In this position, the hammer is slightly spaced from the anvil. As the drill pipe is lowered, the parts will remain substantially in the position shown in Figure 5, with the exception that the mandrel will travel downwardly relative to the anvil sleeve until such time as the shoulder 51 strikes the upper edge of the keeper plate 41. During this movement, the member 26 and its associated hammer sleeve has likewise tended to move downwardly both under influence of the spring 28 which is in slight tension, as well as by gravity. When the keeper plate strikes the shoulder 51, the detent is substantially opposite the socket 44 of the hammer sleeve (see Figure 11) and further downward movement of the mandrel will cause the detent to move from the position shown in Figure 11 to that of Figure 10, and thence to the position shown in Figure 12. This movement is illustrated in part in Figure 6. The parts will now be in the position shown in Figure 2, with the hammer separated from the anvil and ready to strike a second blow when a sufficient stretch is taken in the drill pipe and the spring 28 placed under selected compression. It is possible to strike any blow desired by the jar described.

It will be observed that after the hammer has struck the anvil and it is desired to re-set the hammer for a further blow, that the lowering of the mandrel will move the hammer downwardly for the reason that the spring 28 is secured to both said hammer sleeve and the collar 16 and which collar, in turn, is secured through the medium of bolts 19 to the mandrel. As before stated, in addition to the spring action for moving the hammer sleeve, the hammer sleeve will tend to drop under influence of gravity. Thereafter will follow the movement of the ball 40 in the various sockets to re-set the jar in the position shown in Figure 2. It is important to note that when it is desired to operate the jar to perform a jarring operation, the mandrel will be moved upwardly by the drill string to compress both the springs 10 and 28. During this upward movement, the spring 28 normally urges the hammer sleeve upwardly but upward movement of the hammer sleeve is prevented by the balls 40, being in the position shown in Figure 2. However, when the shoulder 50 strikes the lowermost end of the keeper plate to move the same as the mandrel continues its upward movement, the ball will stay within the socket 44 until it is adjacent or substantially adjacent the socket 46 of the detent carrier. As the hammer sleeve is being constantly urged upwardly by the spring 28, the edge bounding the socket 44 of the hammer sleeve being eccentric to the center of the ball, the ball will be immediately moved into the socket 46 of the keeper plate, and when this occurs, the hammer will move to strike the anvil.

The first step in the operation of the device is, therefore, to have the parts in the position substantially as shown in Figure 2 and then to take a stretch in the drill pipe. This stretch will place the "fish" in tension, it being observed that this tension is communicated to the "fish" from the mandrel through the spring 10 to the member 6. Therefore, so far as the locking means is concerned, said locking means need only control the compression of the spring 28 to hold the same until a desired compression has been reached. Having determined the blow to be delivered to a "fish" through the weight indicator, a spring 28 of suitable size is selected for the jar. When stretch is taken in the drill pipe, the "fish" is placed under tension substantially equal to

the blow to be delivered and upon release of the hammer, a sudden blow results against the anvil which, in turn, is directly communicated to the "fish". The mandrel by taking tension upon the "fish" through the spring 10 will tend to absorb shock resultant upon the hammer striking the anvil so that there is apparently no shock delivered at the derrick floor through the drill pipe.

Jars of very small size may be utilized in practicing the present invention. So far as the inventor is aware, straight pull jars of small size are unsatisfactory but the present jar works efficiently at all times regardless of size.

The present jar is thought to be novel in numerous particulars, among which may be mentioned that after taking a stretch upon the drill pipe, which places the "fish" under tension, a blow is delivered by the jar without relieving the tension in the "fish" or drill pipe. Most straight pull jars operate upon a clutching principle and the resilience of the drill pipe causes one member to move rapidly upwardly to strike a blow and cause a jar, whereas the present jar of this invention does not operate upon the principle of actuating the jar but by mere stretch of the drill pipe alone. Furthermore, clutch type jars wear rapidly and require frequent replacement of parts. In the present invention, the locking means for locking the jar open or closed is not subjected to undue stress at any time, and is of such a character as to be freely movable and not liable to damage. It is possible to strike a blow and re-set the jar at a high rate of speed. In a test, it was found that blows might be delivered at the rate of 15 per minute quite easily.

I claim:

1. A jar having in combination a mandrel, an anvil member to be secured to a "fish", a hammer, a jar spring between the hammer and the mandrel; said mandrel adapted to be secured to a drill pipe adapted to have a tension taken in the same for the purpose of placing the "fish" under tension and for compressing the spring, and a mandrel operated lock adapted to maintain the said hammer and anvil separated until a given compression is taken in said spring whereby upon release of the lock the hammer strikes the anvil to deliver a blow to the "fish", the drill string and "fish" being maintained in continuous tension.

2. A straight pull jar adapted to be interposed between drill pipe and a "fish" and which jar is to be released when a given tension is taken on the said drill pipe, said jar including a hammer, an anvil connected directly to the "fish", a lock for maintaining said hammer and anvil separated, a coil jar spring normally urging said hammer to strike the anvil, and mandrel operated means for releasing said lock when the spring has been compressed to a given degree and a selected tension taken upon the drill pipe to thereafter deliver a blow directly to the "fish", the "fish" at all times being maintained in continuous tension, said lock releasing means being operated in response to relative longitudinal movement between the drill pipe and the "fish".

3. A jar adapted to be interposed between drill pipe and a "fish", said jar including a hammer, an anvil connected directly to the "fish" and a lock for maintaining said hammer and anvil separated, said "fish" being adapted to be placed in tension when the drill pipe is stretched, means for releasing the said lock, and separate means for urging the hammer into anvil engagement to communicate a sudden blow directly to the "fish" while the "fish" is maintained in continuous tension by the stretch of the drill pipe, said lock releasing means being operated in response to relative longitudinal movement between the drill pipe and the "fish".

4. A jar having in combination a mandrel, an anvil sleeve surrounding said mandrel and a hammer sleeve surrounding the anvil sleeve; a shiftable lock between the mandrel, hammer sleeve and anvil sleeve, said shiftable lock being controlled by movement of the said mandrel to lock the anvil of the anvil sleeve and hammer of the hammer sleeve in separated relationship and to release said lock to permit movement of the hammer when the mandrel is removed in one direction.

5. A jar having in combination a tubular mandrel, an anvil and its sleeve concentric upon said mandrel, a hammer and its sleeve concentric upon said anvil sleeve, a lock for releasably maintaining said hammer and anvil separated, said lock including a ball detent, a carrier secured to the anvil sleeve and formed with an opening for receiving said ball detent, a keeper plate formed with two spaced-apart concavities of different depth interposed between the mandrel and said carrier, said hammer formed with a concavity, the relationship being such that when the ball detent lies between the concavity of the hammer and the concavity of least depth of the keeper, the hammer is locked in spaced relationship from the anvil.

6. A jar having in combination a tubular mandrel, an anvil and its sleeve concentric upon said mandrel, a hammer and its sleeve concentric upon said anvil sleeve, a lock for releasably maintaining said hammer and anvil separated, said lock including a ball detent, a carrier secured to the anvil sleeve and formed with an opening for receiving said ball detent, a keeper plate formed with two spaced-apart concavities of different depth interposed between the mandrel and said carrier, said hammer formed with a concavity, the relationship being such that when the ball detent lies between the concavity of the hammer and the concavity of least depth of the keeper, the hammer is locked in spaced relationship from the anvil, said mandrel formed to move said keeper plate to cause substantial registration between the concavity of greatest depth in said keeper plate and the concavity of said hammer to thereby shift the ball detent into the concavity of the keeper plate and release the said hammer for anvil engagement.

7. A jar for use in rotary drilling comprising three members in telescopic concentric assemblage for relative longitudinal movement, striking abutments formed on the outermost two of said members, a lock interposed between said three members and arranged to maintain said striking abutments separated and releasable when the innermost of said members is moved to a given position relative to the other two of said members; a coil spring between the innermost and outermost of said members, said coil spring moving said outermost member to cause a blow to be delivered between said abutments after a longitudinal strain has been taken upon said innermost member.

8. A jar for use in rotary drilling comprising a mandrel having means for connecting the same to a drill string, a sleeve telescopic upon said mandrel and having means for securing the same to a "fish", said sleeve provided with an anvil, a sleeve telescopic upon the first sleeve and pro-

vided with a hammer, means maintaining the anvil and hammer separated but releasable by the exertion of a predetermined longitudinal strain between the mandrel and said first sleeve.

9. A jar for use in rotary drilling comprising a mandrel having means for connecting the same to a drill string, a sleeve telescopic upon said mandrel and having means for securing the same to a "fish", said sleeve provided with an anvil, a sleeve telescopic upon the first sleeve and provided with a hammer, means maintaining the anvil and hammer separated but releasable by the exertion of a predetermined longitudinal strain between the mandrel and said first sleeve, and a spring surrounding said first sleeve and secured to said mandrel and said hammer, to drive said hammer into engagement with said anvil after said first means has been released.

10. A jar comprising a mandrel provided at one end with a fitting for securing the same to a drill string, a sleeve provided with an anvil head telescopic upon said mandrel, a sleeve secured to the first sleeve and provided with a fitting for attachment to a "fish", a coil spring within the second sleeve and surrounding the said mandrel and normally urging the mandrel in one direction, a sleeve provided with an annular hammer in part surrounding the first sleeve, a collar carried by the mandrel, a coil spring surrounding the said sleeve and interposed between the said collar and said hammer, said mandrel adapted to have a longitudinal strain imposed thereon to compress the said springs, and a shiftable lock securing said hammer against movement until a predetermined longitudinal strain has been taken upon said mandrel and one of said springs.

11. A device as set forth in claim 10, one of said springs being the spring interposed between the said hammer and said collar to urge said hammer into anvil engagement upon release of said shiftable lock.

12. A straight pull rotary jar having three essential parts consisting of a section adapted to be connected to a drill pipe, a section adapted to be connected to a fishing tool and longitudinally movable with respect to the first mentioned section and a hammer longitudinally movable with respect to both of said sections, said jar also having energy storing means and latching means cooperating with each other and the sections to cause the hammer to strike a jarring blow directly on the section connected to the fishing tool independently of the section connected to the drill stem as the sections are placed under tension by pulling on the drill stem.

13. A straight pull rotary jar having two sections for transmitting tension from a drill pipe or the like to a fish and a hammer independent of the sections for imparting a jar to one of the sections, a spring for actuating said hammer, said hammer and spring being positioned on the outside of said sections.

14. A straight pull jar including two coupled sections, a spring for transmitting tension from one section to the other, an anvil carried by one of said sections, means for delivering a blow to said anvil, said means comprising a hammer mounted independently of both of said sections, and a second spring for urging said hammer into engagement with said anvil and means for setting and releasing the blow delivering means in response to relative longitudinal movement of the sections.

JOHN T. PHIPPS.