PCT WORLD INTELLECTUAL PROPERTY ORGANIZATION
International Bureau

INTERNATIONAL APPLICATION PUBLISHED UNDER THE PATENT COOPERATION TREATY (PCT)

(51) International Patent Classification 5 : H04N 5/243, 5/238	A1	**(11) International Publication Number:** WO 90/02464 **(43) International Publication Date:** 8 March 1990 (08.03.90)

(21) International Application Number: PCT/EP89/01010

(22) International Filing Date: 23 August 1989 (23.08.89)

(30) Priority data:
8802082 23 August 1988 (23.08.88) NL

(71) Applicant *(for all designated States except US):* COPYGUARD ENTERPRISES S.A. [LU/LU]; 672 Rue de Neudorf, Luxembourg (LU).

(72) Inventor; and
(75) Inventor/Applicant *(for US only) :* WIJNEN, Arie, Marinus [NL/NL]; Kamille 14, NL-2811 RC Reeuwijk (NL).

(74) Agent: MOMMAERTS, J., H.; P.O. Box 90649, NL-2509 LP The Hague (NL).

(81) Designated States: AT (European patent), BE (European patent), CH (European patent), DE (European patent), FR (European patent), GB (European patent), IT (European patent), JP, LU (European patent), NL (European patent), SE (European patent), US.

Published
With international search report.

(54) Title: VIDEO CAMERA WITH AUTOMATIC INTENSITY CONTROL

(57) Abstract

A video camera with automatic intensity control, provided with an imaging system and an image transducing apparatus (3) having an entry window (2), on which images of the pictures to be taken can be formed by this system, and is adapted to transform said images into electrical signals delivered to an output connection (6), wherein the amplitude of the image signal derived from the output (6) of the image transducing apparatus (3) and corresponding with the light intensity of an image portion is transformed into a control signal for a control means (8, 17) of a collecting electrode (5) or of a liquid crystal plate (15), which, synchronously with the image line scanning, can influence the image signal in such a manner that the sensitivity of the scanned image point is decreased at a large amplitude and is increased at a small amplitude.

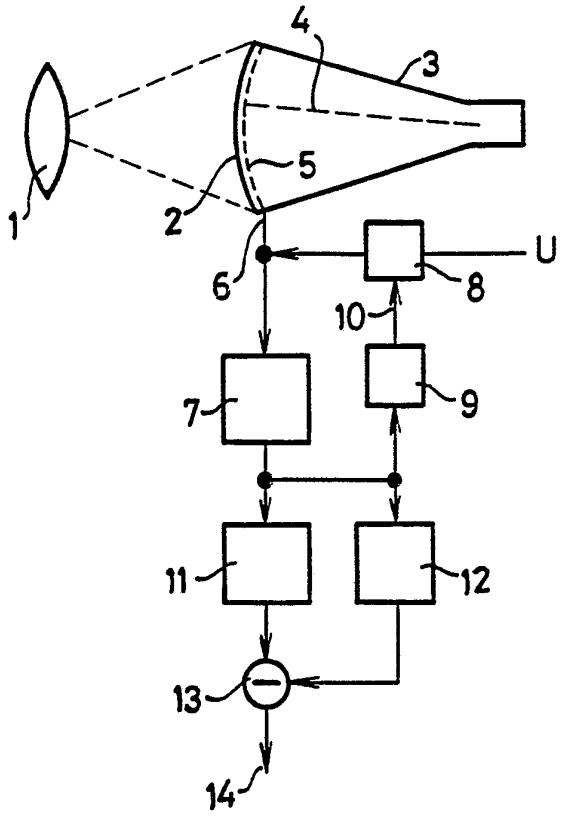

FOR THE PURPOSES OF INFORMATION ONLY

Codes used to identify States party to the PCT on the front pages of pamphlets publishing international applications under the PCT.

AT	Austria	ES	Spain	MG	Madagascar
AU	Australia	FI	Finland	ML	Mali
BB	Barbados	FR	France	MR	Mauritania
BE	Belgium	GA	Gabon	MW	Malawi
BF	Burkina Fasso	GB	United Kingdom	NL	Netherlands
BG	Bulgaria	HU	Hungary	NO	Norway
BJ	Benin	IT	Italy	RO	Romania
BR	Brazil	JP	Japan	SD	Sudan
CA	Canada	KP	Democratic People's Republic of Korea	SE	Sweden
CF	Central African Republic			SN	Senegal
CG	Congo	KR	Republic of Korea	SU	Soviet Union
CH	Switzerland	LI	Liechtenstein	TD	Chad
CM	Cameroon	LK	Sri Lanka	TG	Togo
DE	Germany, Federal Republic of	LU	Luxembourg	US	United States of America
DK	Denmark	MC	Monaco		

Video camera with automatic intensity control

The invention relates to a video camera provided with an imaging system and an image transducing apparatus having an entry window, on which images of the pictures to be taken can be formed by this system, and is adapted to transform said images into electrical signals delivered to an output connection.

In the current video cameras an iris diaphragm in the optical system is used for adapting the light intensity of the image formed on the entry window, which diaphragm is controlled by means of a control system responsive to the light intensity in such a manner that a substantially constant average light intensity is maintained.

Such a camera has several draw-backs. A first draw-back is that the mechanical control of the diaphragm has a given inertia, so that a lag in the light intensity control arises, which, in particular in the case fast light changes, e.g. with a fast camera movement from light to dark and vice versa, will lead an objectionable image transition. A second draw-back is that such a control acts on the whole image, so that in the case of large light contrasts and depending on the manner of intensity measurement, some image regions will be over- or underexposed, with, as a consequence, reproduction losses in the image parts of these regions.

Although, for the first draw-back, possibly a solution might be found by increasing the speed of the diaphragm drive, there is no solution for the second objection in the case of a diaphragm-type light control.

It is an object of the invention to provide a camera of the above-mentioned kind, by means of which these objections can be avoided. To that end the camera according to the invention is characterized in that the amplitude of the image signal derived from the signal output and corresponding with the light intensity of an image portion is transformed into a control signal for a control means for an additional image influencing element which, synchronously with the image

line scanning, can influence the image signal in such a manner that the sensitivity in the image point in question during the image scanning is decreased at a large amplitude and is increased at a small amplitude.

Since, now, the sensitivity in any image point, or at least in groups of closely adjacent image points, can be adapted to the local light intensity, large light contrasts can be levelled and a good reproduction of the image portions can be obtained in the very bright and dark image portions.

The control should, of course, be so that not all the light contrasts will be suppressed, but only an adaptation to transitions in the light intensity will be obtained.

In a video camera with a transducer tube with electron beam scanning and a common electrode arranged behind the image window, the connection of which is, at the same time, the signal output, the voltage at this electrode can be controlled, according to the invention, in correspondence with the amplitude of the image signal during scanning.

It also possible, and in particular in so-called CCD transducers, to obtain such a control by arranging,in the light path towards the transducer, a liquid crystal element or similar light control element, to which a HF voltage can be applied, the frequency thereof, and, thus, the transmittance of said element, being controlled in correspondence with the scanning.

Sometimes ligh intensity peaks will remain which cannot be completely suppressed by this control. In order to suppress also these peaks, it is possible, according to the invention, to send the image signal, if required after a preamplification, towards a threshold circuit which only passes the signal portions exceeding the chosen threshold, which portions, if required after adaptation of the amplitude thereof, will be subtracted from the original image signal in order to reduce the brighter portions accordingly, and, in particular, before said threshold circuit an inverter can be

provided, so that, than, the output signals of the threshold circuit can be directly added to the image signal.

The invention will be elucidated in more detail by reference to a drawing, in which Figs. 1 and 2 show two embodiments of the video camera according to the invention with associated electric circuits in a highly simplyfied schematic way.

The camera according to Fig. 1 comprises an optical image forming system 1 forming images of the pictures to be taken on an entry window 2 of a video picture tube, which screen 2 is provided, in the usual manner, with a light sensitive layer which, under the influence of irradiation, can produce photoelectrons which, when scanning said layer by an electron beam 4, will influence the intensity of the electron current accordingly. The current modulated in this manner is collected by a collecting electrode 5 on this screen, which gives rise to an image signal at a signal output terminal 6 connected with said electrode 5. The signal derived from the terminal 6 is sent towards a pre-amplifier 7 for a further processing.

A DC voltage applied to the electrode 5 having a suitable magnitude (and polarity) in respect of the cathode of the tube 3 ensures the collection of the beam 4, which voltage is adjustable by means of an adjustment circuit 8. In the known camera tubes of this kind the voltage at the terminal 6 is not changed anymore after a suitable adjustment thereof.

According to the invention, the amplitude of the signal derived from the terminal 6 is (in particular after a pre-amplification thereof in the amplifier 7) constantly determined in a measuring stage 9, which, in particular, is adapted to detect a sudden and considerable variation in the amplitude level of the image signal. This measuring stage 9 produces, when detecting such a variation, a control signal which is supplied to a control input 10 of the voltage control circuit 8, and this in such a manner that, at a sudden

and large brightness increase or decrease, the voltage U at the electrode 5 is changed in the sense of a sensitivity decrease or increase respectively.

Such a change can detected very quickly, so that within a very small number of image points of an image line a sensitivity adaptation can already be obtained. This has as a consequence that nowhere in the picture over- or underexposure will take place, and that as well in the very bright as in the very dark image portions a good reproduction of the image portions will be obtained.

This is especially clearly visible in the case that the image shows a sharp transition between bright and dark portions. This control appears to work so fast that, while a clear brightest contrast is maintained, the reproduction of the image portions at both sides of the shadow boundary is excellent. This is especially also the case during movement of the camera from bright to dark portions and vice versa.

With the current cameras with diaphragm control this is not possible. In the first case, dependent on the manner of light measurement, the reproduction of the image elements in the bright or dark portions will be very poor, or, in the case of an adjustment on the average, will be insufficient in both portions. In the second case it will take some time before the diaphragm has been adjusted on the new condition, and, in the mean time, a poor image reproduction will be obtained.

Of course the voltage control by means of the stages 8 and 9 should be so that normal brightness contrasts in the image will not be suppressed. At a over-all satisfactory adjustment it can occur that, in particular in the very bright image portions, the reproduction of finer image elements will be insufficient. In order to improve this additional circuit elements are used which are diagrammatically shown in the drawing.

The output of the amplifier 7 is connected with the

input of an amplifying stage 11, which can be a part of a current image signal amplifier, and, at the same time, with an auxiliary stage 12 which is adapted to amplify the same signal by a desired factor and, at the same time, will subject it to a threshold operation in which only those signal portions which exceed the threshold will be passed. The outputs of the stages 11 en 12 are connected with the inputs of a subtracting stage 13 in which the normal image signal at the output of the amplifier 11 is decreased by the signal portions passed by the stage 12. The image signal thus obtained appears at the output 14 of the latter stage 13, and is supplied to subsequent circuit elements of the current type.

Instead of using a subtracting stage 13, it is also possible to use an inverting stage for the signal supplied to the circuit 12, after which the output signals of the stages 11 and 12 can be added as such.

Fig. 2 shows a modified embodiment which is, in particular, suitable for use in a CCD camera comprising a special image cell matrix in which charges collected in the various image points can be shifted towards output registers, but this embodiment can also be used in an image tube according to Fig. 1.

Between the image forming system 1 and the image transducer 3, which is, in particular, a CCD transducer but can also be an electron-beam tube according to Fig. 1, a liquid-crystal plate 15 is provided having a control electrode 16 which is connected with a frequency generator 17. The transmittance of this plate depends, for instance, on the frequency of the applied voltage.

The frequency of the generator 17 can be controlled, and, to that end, the output voltage of the stage 9 of Fig. 1 can be applied to the control input 18 thereof, this in such a manner that a control of the above-mentioned kind will be obtained.

It will be clear that instead of a liquid-crystal plate,

light transmittance can be controlled by means of an electric signal.

It will be clear that the element 15, as shown in Fig. 2 interrupted lines at 15', can also be arranged before the image forming system 1. Moreover it will be clear that this element not only be constructed as a separate element, but can also be integrated in a suitable way into the system 1 or the image transducer 3.

CLAIMS

1. A video camera with automatic intensity control, provided with an imaging system and an image transducing apparatus having an entry window, on which images of the pictures to be taken can be formed by this system, and is adapted to transform said images into electrical signals delivered to an output connection, **characterized** in that the amplitude of the image signal derived from the output (6) of the image transducing apparatus (3) and corresponding with the light intensity of an image portion is transformed into a control signal for a control means (8, 17) for an additional image influence element (5, 15), which, synchronously with the image line scanning, can influence the image signal in such a manner that the sensitivity in the image point in question during the image scanning is decreased at a large amplitude and is increased at a small amplitude.

2. The video camera of claim 1 with a transducer tube with electron beam scanning and a common electrode arranged behind the image window, the connection of which is, at the same time, the signal output, **characterized** in that the voltage at this electrode (5) can be controlled in correspondence with the amplitude of the image signal during scanning.

3. The video camera of claim 1, **characterized** by a liquid chrystal element (15) or similar light control element arranged in the light pass towards the image transducing apparatus (3), to which element a control signal can be applied for controlling the transmitivity of said element (15) in correspondence with the scanning.

4. The video camera of anyone of claims 1..3, **characterized** in that the image signal, if required after pre-amplification (11), is sent towards a threshold circuit (12) which only passes the signal portions exceeding the chosen threshold, which portions, if required after adaptation of the amplitude thereof is subtracted (13) of the original image signal in order to reduce the brighter portions accordingly.

5. The video camera of claim 4, **characterized** in that

before said threshold circuit, an inverter stage is arranged, and in that the output signals of the threshold circuit are directly added to the image signal.

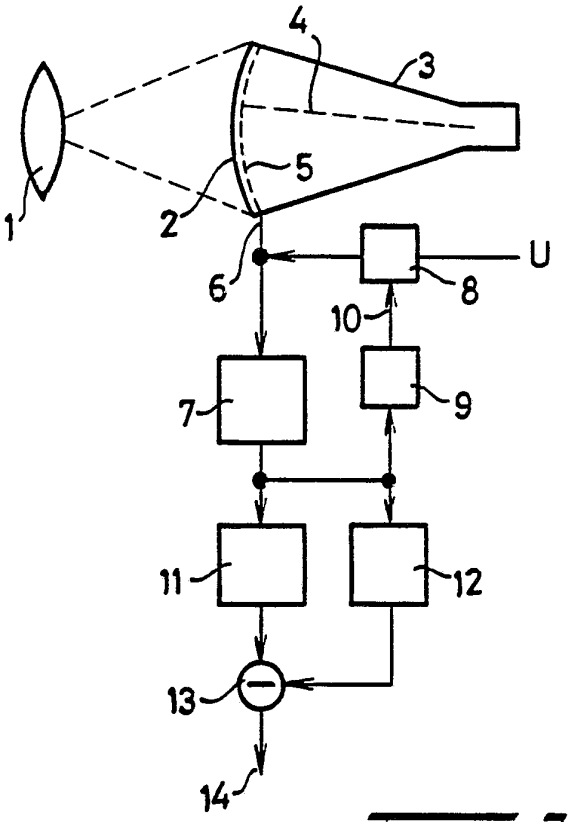

Fig:1.

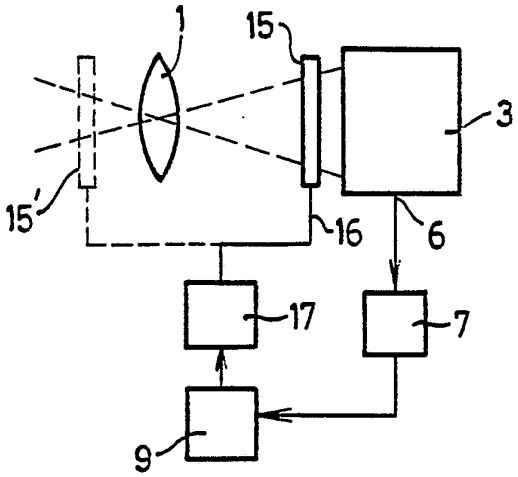

Fig:2.

INTERNATIONAL SEARCH REPORT

International Application No PCT/EP 89/01010

I. CLASSIFICATION OF SUBJECT MATTER (if several classification symbols apply, indicate all) [6]

According to International Patent Classification (IPC) or to both National Classification and IPC

IPC[5]: H 04 N 5/243, H 04 N 5/238

II. FIELDS SEARCHED

Minimum Documentation Searched [7]

Classification System	Classification Symbols
IPC[5]	H 04 N 5

Documentation Searched other than Minimum Documentation to the Extent that such Documents are Included in the Fields Searched [8]

III. DOCUMENTS CONSIDERED TO BE RELEVANT [9]

Category [10]	Citation of Document, [11] with indication, where appropriate, of the relevant passages [12]	Relevant to Claim No. [13]
X	US, A, 2786960 (PALMER et al.) 26 March 1957, see column 1, line 18 - column 2, line 4; column 2, line 41 - column 3, line 46	1,2
X	US, A, 3919472 (DORSEY et al.) 11 November 1975, see column 2, line 56 - column 5, line 27	1
A		2
X	DE, A, 2119007 (BOSCH) 2 November 1972, see page 2, line 23 - page 3, line 35	1,2
A		3
A	EP, A, 0141012 (NATIONAL AERONAUTICS AND SPACE ADMINISTRATION NASA) 15 May 1985, see page 4, line 26 - page 5, line 36; figure 2	3
A	US, A, 4214272 (HAPGOOD) 22 July 1980, ./.	4,5

* Special categories of cited documents: [10]

"A" document defining the general state of the art which is not considered to be of particular relevance

"E" earlier document but published on or after the international filing date

"L" document which may throw doubts on priority claim(s) or which is cited to establish the publication date of another citation or other special reason (as specified)

"O" document referring to an oral disclosure, use, exhibition or other means

"P" document published prior to the international filing date but later than the priority date claimed

"T" later document published after the international filing date or priority date and not in conflict with the application but cited to understand the principle or theory underlying the invention

"X" document of particular relevance; the claimed invention cannot be considered novel or cannot be considered to involve an inventive step

"Y" document of particular relevance; the claimed invention cannot be considered to involve an inventive step when the document is combined with one or more other such documents, such combination being obvious to a person skilled in the art.

"&" document member of the same patent family

IV. CERTIFICATION

Date of the Actual Completion of the International Search	Date of Mailing of this International Search Report
11th October 1989	20 NOV 1989
International Searching Authority: EUROPEAN PATENT OFFICE	Signature of Authorized Officer: T.K. WILLIS

III. DOCUMENTS CONSIDERED TO BE RELEVANT (CONTINUED FROM THE SECOND SHEET)

Category *	Citation of Document, with indication, where appropriate, of the relevant passages	Relevant to Claim No
	see column 3, lines 4-21; column 4, lines 10-34	
	--	
A	US, A, 3612762 (WUELLNER) 12 October 1971, see column 2, line 39 - column 3, line 28; figure 3	1,2

ANNEX TO THE INTERNATIONAL SEARCH REPORT ON INTERNATIONAL PATENT APPLICATION NO. EP 8901010 SA 30702

This annex lists the patent family members relating to the patent documents cited in the above-mentioned international search report. The members are as contained in the European Patent Office EDP file on 14/11/89
The European Patent Office is in no way liable for these particulars which are merely given for the purpose of information.

Patent document cited in search report	Publication date	Patent family member(s)		Publication date
US-A- 2786960		None		
US-A- 3919472	11-11-75	None		
DE-A- 2119007	02-11-72	None		
EP-A- 0141012	15-05-85	US-A-	4546248	08-10-85
		AU-B-	561088	30-04-87
		AU-A-	2855884	14-03-85
		CA-A-	1207891	15-07-86
		JP-A-	60121881	29-06-85
US-A- 4214272	22-07-80	None		
US-A- 3612762	12-10-71	DE-A-	2012984	01-10-70
		FR-A-	2040034	15-01-71
		GB-A-	1249593	13-10-71