(12) UK Patent Application (19) GB (11) 2 160 102 A

(43) Application published **18 Dec 1985**

(21) Application No **8508795**

(22) Date of filing **4 Apr 1985**

(30) Priority data

(31) **3412756** (32) **5 Apr 1984** (33) **DE**

(71) Applicant
Richard Wolf GmbH (FR Germany),
7134 Knittlingen, Federal Republic of Germany

(72) Inventors
Dr. Gerd Buess,
Dr. Jurgen Eitenmuller

(74) Agent and/or Address for Service
Elkington and Fife,
52/54 High Holborn, High Holborn House,
London WC1V 6SH

(51) INT CL[4]
A61B 17/38

(52) Domestic classification
A5R EC

(56) Documents cited
None

(58) Field of search
A5R

(54) Electric arthroscopy knife

(57) An electric arthroscopy knife for surgical operations upon and in joints, especially the knee, consists of an exposed electrically cutting metal surface (2) made of a burn-on alloy (1) for dental purposes, an electrically insulating ceramic material (3) for dental purposes burned on the burn-on alloy (1) and covering the surfaces of the non-cutting parts, and a long haft (5) rigidly and electroconductively connected (4) to the burn-on alloy (1), which haft (5) comprises, on an electrically insulating coating (6), an insulated handle and a plug contact. The knife can be in various shapes and has been shaped as a hook or forceps.

FIG.1

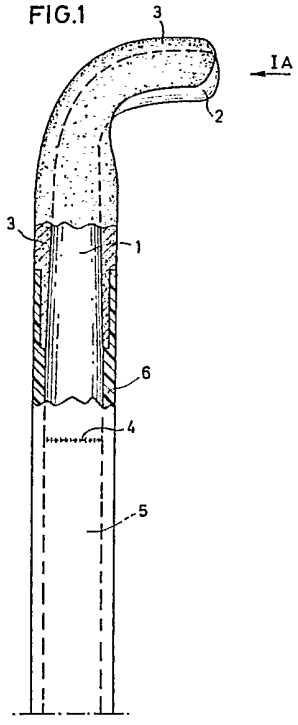

FIG.1A



GB 2 160 102 A

2160162

FIG.1

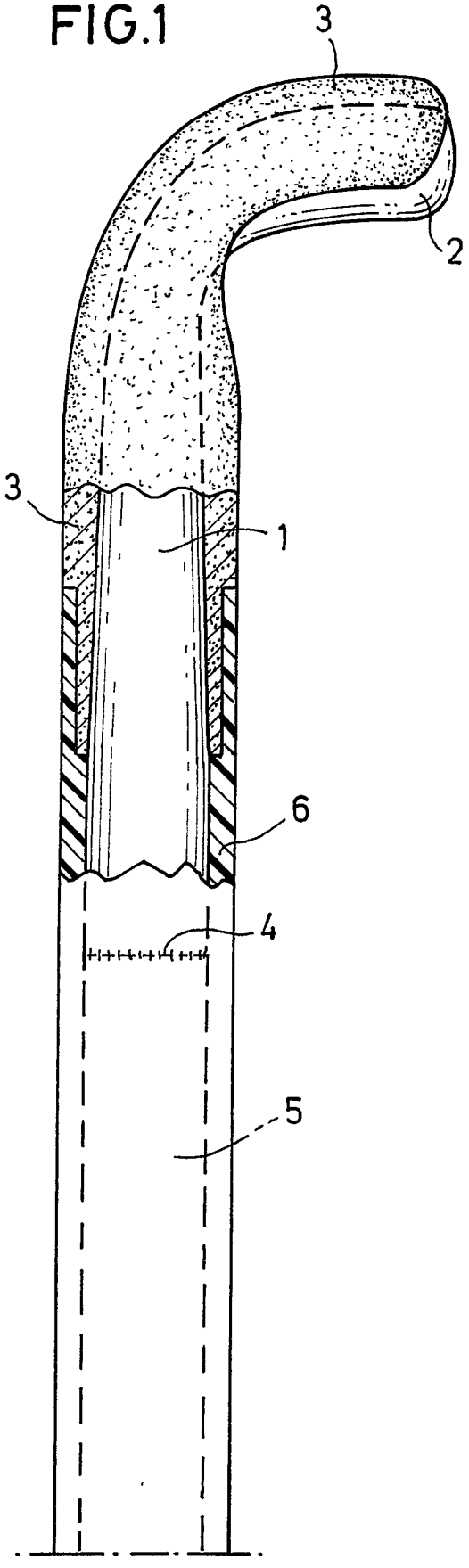

FIG.1A

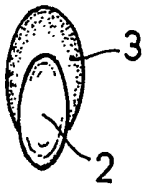

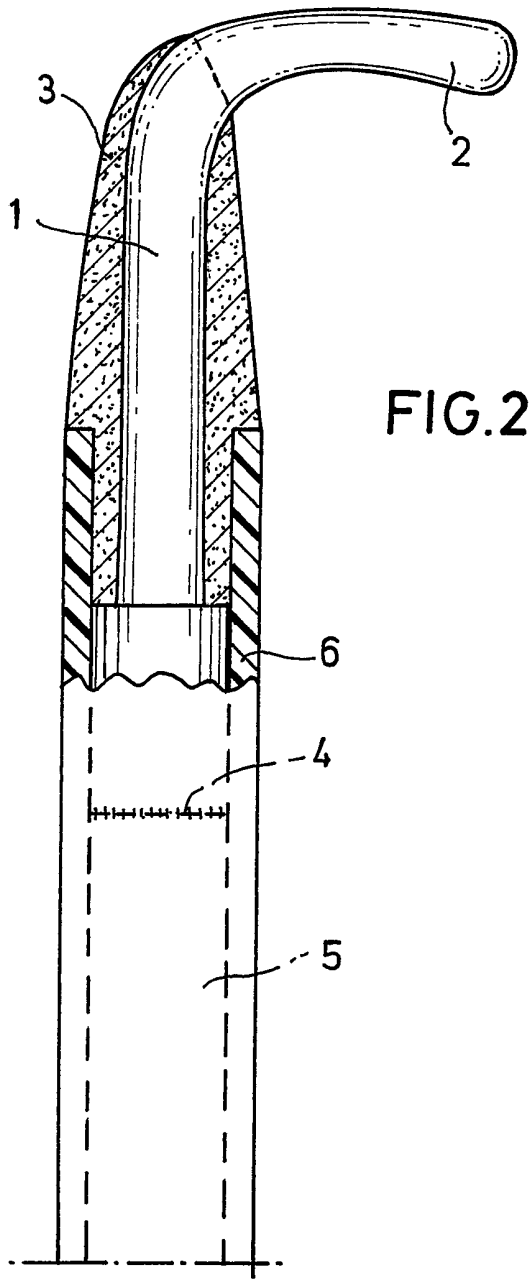

FIG.2

FIG.3

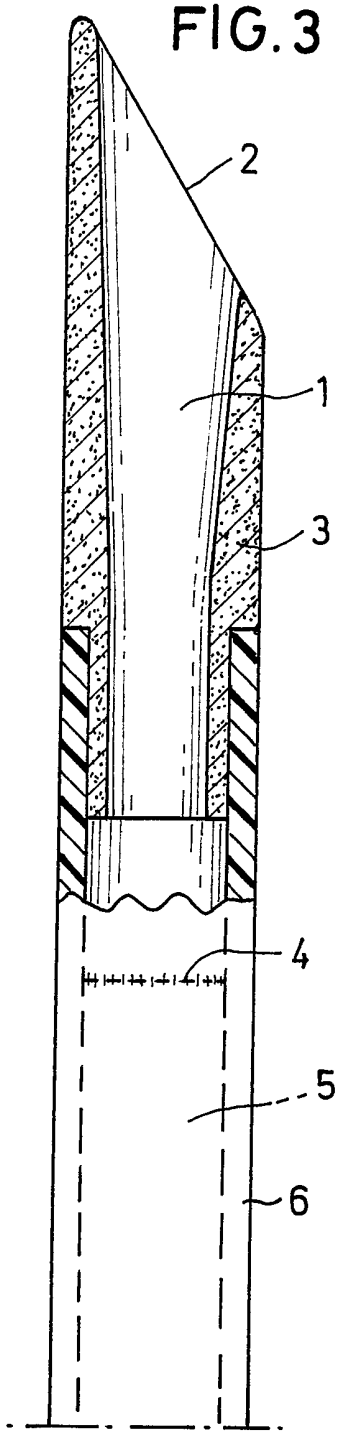

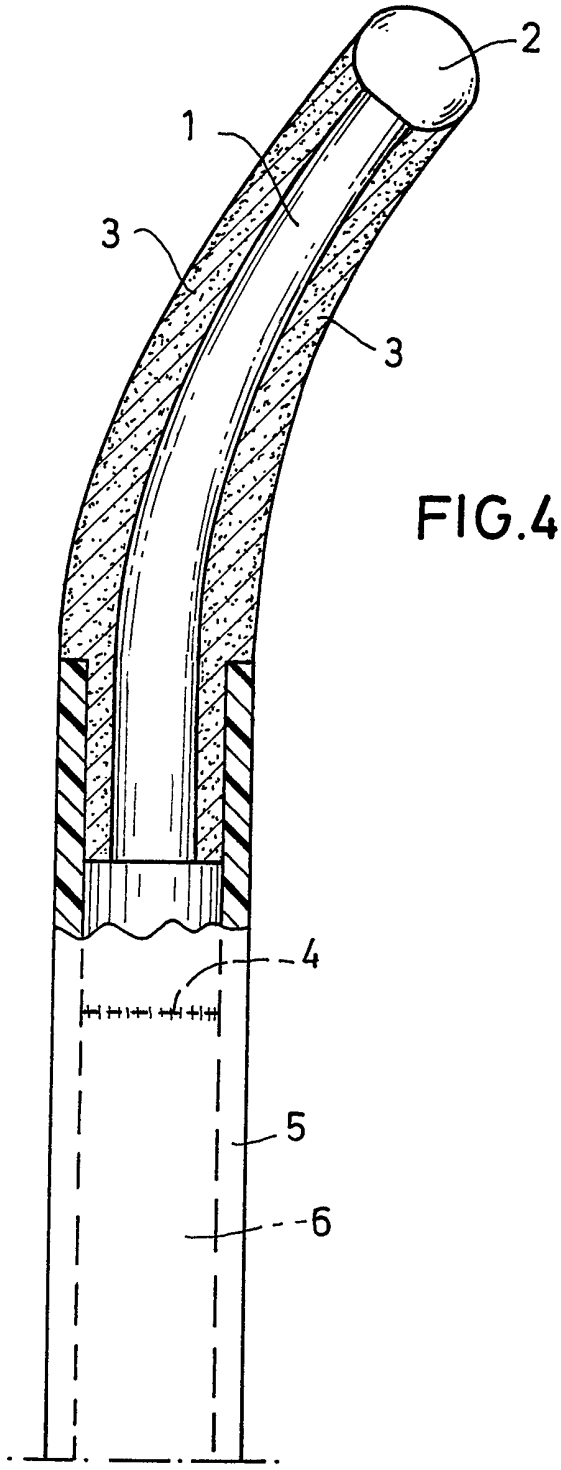

FIG.4

SPECIFICATION

Electric arthroscopy knife

The present invention relates to an electric arthroscopy knife which enables surgical operations to be carried out at and within joints, more specificially the knee, by means of an arthroscope.

Recently arthroscopy has gained importance, particularly for diagnostic purposes. In addition, instruments have been developed for use in arthroscopic surgery by means of which surgical interventions in and at the joint are possible without the need for opening the joint altogether. The equipment necessary for arthroscopic surgery is extremely expensive and sensitive. Thus, said equipment often has only a shortlife-time and can either be used once of just a few times. In the Standard Book "Arthroscopic Surgery of the Knee" by David J. Dandy, Publishing House Churchhill Livingstone 1981, it reads on page 86 that the ideal instrument for removing a meniscus would be a tool having a diameter of only one or two millimeters by means of which the meniscus tissue could be melted away upon contact. Such an instrument, however, has not yet been invented.

In a preferred embodiment the present invention provides an electric arthroscopy knife which is indeed capable of melting away the meniscus tissue after simply contacting same and, moreover, suitable for all other arthroscopic surgical interventions which so far could only be carried out using insufficient mechanical tools.

Electric surgical knives are already known. They are commercially available under the names of diathermy devices and are successfully employed, e.g. in urology, for endoscopy. However, one prerequisite for their application is that there is enough space around the location which is to be cut so that the electric knife is sufficiently isolated by the surrounding air or water to ensure that the electric cut is only made at the desired place. However, surgery at and within joints, more specifically in the knee, takes place in such narrow spaces that the previous electric knives are unusable.

According to the present invention there is provided an electric arthroscopy knife consisting of

a) an exposed electrically cutting metal surface made of a burn-on alloy for dental purposes;

b) an electrically isolating ceramic material for dental purposes burned on the burn-on alloy and covering the surfaces of the non-cutting parts;

c) a long haft rigidly and electroconductively connected to the burn-on alloy;

d) an electrically isolating coating enclosing the long haft;

e) a handle attached to the isolated haft, and

f) a plug contact for connection to a power supply.

Burn-on alloys for dental purposes first have the required mechanical hardness and can be partially covered and hence electrically isolated by means of a ceramic composition having been burnt thereonto. Burn-on alloys are marketed by various firms together with a ceramic composition suitable to be burnt thereonto. All the cutting surfaces and also the non-cutting surfaces covered by ceramics are made of the burn-on alloy. Particularly suitable for the present invention are gold alloys and noble metal alloys which will not even be oxidized during the cutting process and thereby will prevent tissue parts from sticking to the cutting surface and carbonizing. Such kind of deposits on the cutting surface would immediately result in the formation of an isolating layer which would reduce the efficiency of the cutting current. For mechanical cleaning the instrument would have to be removed from the joint again which would result in a loss of time and unnecessary manipulations.

The burnt-on electrically isolating ceramic material for dental purposes covers all parts that are not intended to cut. The burnt-on ceramic is mechanically and thermally stable so that it will not break off in splinters even at a higher mechanical stress which would result in contamination and formation of deposits in the joint. The technology of burning-on the burn- on alloys has been developed to such an extent that the non-cutting parts made of the burn-on alloy can have any shape. Thus the metal cutting surface can be adapted to fit any intended use. For example, it may be the frontal surface or shaped as a unilaterally cutting hook or a bilaterally cutting hook or a forceps. If it is in the shape of a forceps, it is preferred that only one nipper is made to cut, whereas the other nipper is capable of grasping the cut-off piece of tissue after cutting and removing same from the joint. Some typical embodiments of the metal cutting surface are shown in the accompanying drawings.

It is recommended that the ceramic material should be dyed in a contrasting colour so that the arthroscopy knife can be differentiated from the tissue and bone more easily. It is preferred to select a dark colouration which will contrast particularly well with the white bone and pink tissue. Dyes for the ceramic materials are known to the artisan so that actually any desired colour can be selected.

The electric arthroscopy knife according to the present invention further comprises a long haft which is rigidly and electroconductively connected to the burn-on alloy. Basically it could also consist of the burn-on alloy, while it preferably consists of conventional stainless instrument steel. It is preferred that the thickness and material of the long haft are selected so that it is more readily deformable than the instrument tip coated with the ceramics. Thereby a possible overload of the cutting part made of the burn-on alloy is avoided and a warning of overstress will be given. The long haft in general has a length of from 12 to 25 cm. Lengths of from 18 to 22 cm have proven to be particularly useful.

According to the invention the long haft is enclosed by an electrically isolating coating. Coatings made of synthetic materials have proven to be particularly useful, coatings made of synthetic shrinking tubing being particularly preferred. According to the invention a long haft having an isolating coating is inserted in a handle which can be of

conventional form and which ensures convenient handling. At the end of the long haft, the electric arthroscopy knife has a plug contact, preferably in a construction integrated in the handle for connection to a power supply. The antipole may be attached at any optional location of the patient's body, but preferably it is attached via a large area in proximity to the joint which is to be operated on.

In order to enable suitable orientation during the operation it is preferred that some marking which corresponds to the cutting direction of the cutting metal surface is provided at the long haft.

The electric arthroscopy knife can be brought to the location of the joint to be operated upon either separate from the arthroscope or through the arthroscope. It is obvious that a separate introduction provides a higher mobility for the electric arthroscopy knife. When the arthroscopy knife is guided through the arthroscope, only one puncture into the joint is required. The more minor the injuries are, the shorter and less complicated is the healing process after the operation. Arthroscopic surgery has already significantly shortened healing periods as compared to those of conventional surgery. The electric arthroscopy knife according to the present invention enables an operation to be performed faster and more simply and any injuries caused in the process of reaching the operation site are further reduced. With the embodiment according to the invention having the shape of a forceps it is even possible to directly remove the cut-off tissue portions from the operation site by means of the cutting tool.

Conventional arthroscopes have a diameter of about 6 mm. Thus, the electric arthroscopy knives according to the invention preferably have a thickness of at least 2 mm and at most 6 mm. More specifically, if they are to be introduced through the arthroscope, their diameters must not substantially exceed 4 mm. Thus, the cutting and non-cutting metal surfaces made of the burn-on alloy are dimensioned so that they have a length in the range of from 2 to 6 mm and a width in the range of from 1 to 3 mm. The burnt-on ceramic material in general should have a thickness of from 0.5 to 2 mm in order to have sufficient mechanical stability to prevent it breaking off in splinters and to sufficiently isolate the electrically conductive burn-on alloy. The transition between the burnt-on ceramics and the isolating coating on the long haft should also be shaped so that sufficient isolation is ensured, in addition a smooth change-over should occur so that unnecessary friction or unnecessary catching on the tissue is avoided. The change-over from the burn-on alloy and the long haft is most conveniently effected by brazing. The brazed connection is covered with the isolating coating and, thus, will optionally and mechanically not be noticeable. The diameter of the long haft is chosen corresponding to the size and intended use of the cutting portion. It is in general from 2 to 6 mm including the coating.

To facilitate the handling of the electric arthroscopy knife through the long haft, the long haft is inserted into a conventional anatomically adapted handle which may be made of metal, plastics or rubber. The electric connection at the end of the long haft is conveniently effected by a plug contact which optionally may be inside the handle in an integrated construction.

The arthroscopy knife described above allows localization of the position of the part to be operated upon by means of the arthroscope and allows the arthroscopy knife to be brought into a suitable cutting position. It is only then that the cutting current is switched on and the cut is made by electrical burning.

Producers and suppliers of burn-on alloys and ceramic materials suitable in combinations therewith are, for example, the companies Heraeus, Degussa and Vita-Zahnfabrik, all of them in the Federal Republic of Germany. Basically, all burn-on alloys and ceramic materials in suitable combinations therewith are usuable which do not break off in splinters under mechanical stress and do not oxidize during the electrical cutting process. Tests with various materials have confirmed that alloys containing gold and noble metals are particularly suitable.

Some typical embodiments of the arthroscopy knife according to the present invention are shown in detail, by example only, with reference to the accompanying drawings.

Figure 1 shows one embodiment in which the cutting surface is shaped as a one-sided hook.

Figure 1A shows a view in the direction of the arrow 1A in Figure 1.

Figure 2 shows one embodiment in which the cutting surface is shaped as a double-sided hook having a higher curvature than Figure 1 and is particularly suitable for total ectomy of the meniscus.

Figure 3 shows one embodiment comprising an obliquely cutting front side.

Figure 4 shows one embodiment in which the upper part has a slight curvature and the cutting front side has a hemispheral shape.

In the drawings

1 is the core made of the burn-on alloy, 2 is the exposed and cutting surface, 3 is the burnt-on ceramics, 4 is the brazed connection between the burn-on alloy and the metal core of the long haft, 5 is the metal core of the long haft, and 6 is the electrically isolating coating on the long haft.

Further preferred embodiments are those of the forceps type wherein, in addition to the electrically conductive cutting part the second nipper is made so as not to be electrically conductive but adapted to firmly grasp the cut-off tissue portions after separation and removal of the same from the joint. Arthroscopy knives according to the present invention may also, of course, be used for the removal of the meniscus by conventional access routes, and by using the same, unintentional cuts can be more readily avoided then by using conventional instruments.

CLAIMS

1. An electric arthroscopy knife comprising

a) an exposed electrically cutting metal surface made of a burn-on alloy for dental purposes;

b) an electrically isolating ceramic material for dental purposes burned on the burn-on alloy and covering the surfaces of the non-cutting parts;

c) a long haft rigidly and electroconductively connected to the burn-on alloy;

d) an electrically isolating coating enclosing the long haft;

e) a handle attached to the isolated haft; and

f) a plug contact for connection to a power supply.

2. An electric arthroscopy knife according to claim 1, wherein the burn-on alloy is a gold or noble metal alloy which is insensitive to oxidation.

3. An electric arthroscopy knife according to claims 1 or 2, wherein the cutting metal surface is either present as the frontal surface or is shaped as a unilaterally cutting hook or a bilaterally cutting hook or a forceps.

4. An electric arthroscopy knife according to any one of claims 1 to 3, wherein the ceramic material is dyed.

5. An electric arthroscopy knife according to any one of claims 1 to 4, wherein the long haft is made of stainless instrument steel.

6. An electric arthroscopy knife according to any one of claims 1 to 5, wherein the long haft is more readily deformable than the burn-on alloy.

7. An electric arthroscopy knife according to any one of claims 1 to 6, wherein the coating enclosing the long haft consists of plastics.

8. An electric arthroscopy knife according to claim 7, wherein the coating is made of a shrinking tubing.

9. An electric arthroscopy knife according to any one of claims 1 to 8, wherein the long haft has a marking which corresponds to the cutting direction of the metal cutting surface.

10. An electric arthroscopy knife according to any one of claims 1 to 9, adapted to be guided through the interior of an arthroscope.

11. An electric arthroscopy knife substantially as herein described with reference to the accompanying drawings.

Printed in the UK for HMSO, D8818935, 10/85, 7102.
Published by The Patent Office, 25 Southampton Buildings, London, WC2A 1AY, from which copies may be obtained.