United States Patent [19]

Swartout

[11] **Patent Number: 4,681,345**

[45] **Date of Patent: Jul. 21, 1987**

[54] **PASSIVE AUTOMOBILE SEAT BELT REMINDING DEVICE**

[76] Inventor: **Willson C. Swartout,** 31 Phoenix Ave., Newark, Del. 19711

[21] Appl. No.: **888,477**

[22] Filed: **Jul. 23, 1986**

[51] **Int. Cl.**[4] **B60R 21/10**

[52] **U.S. Cl.** **280/801;** 297/481

[58] **Field of Search** 280/801, 808; 297/468, 297/481, 483

[56] **References Cited**

U.S. PATENT DOCUMENTS

3,485,529	12/1969	Marling	297/481
3,981,519	9/1976	Cataldo	297/483
4,289,352	9/1981	Ashworth	280/808
4,323,278	4/1982	Sukopp et al.	280/808

Primary Examiner—John J. Love
Assistant Examiner—Ross Weaver
Attorney, Agent, or Firm—Mortenson & Uebler

[57] **ABSTRACT**

A device is provided which passively reminds persons seated in an automobile to fasten his or her seat belt. The device comprises seat belt clip means having a projection extending therefrom which, when the seat belt is disengaged, is positioned so that the projection extends into the space normally occupied by a user of the seat and to the back of a person who sits in the seat, thereby causing discomfort until the person properly engages the seat belt. When the seat belt is properly engaged, the projection stows unobstrusively out of the way of driver and controls.

1 Claim, 11 Drawing Figures

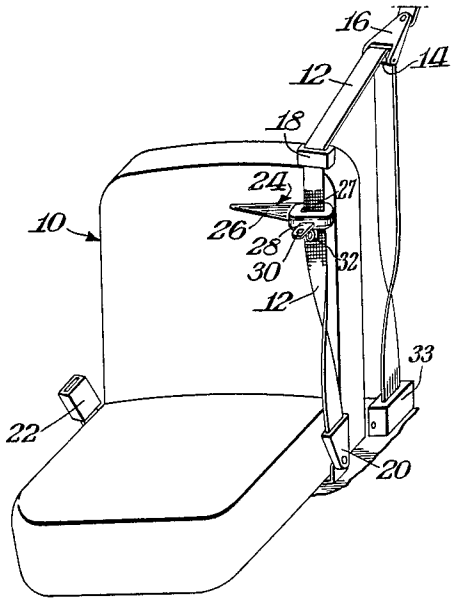

Fig. 1.

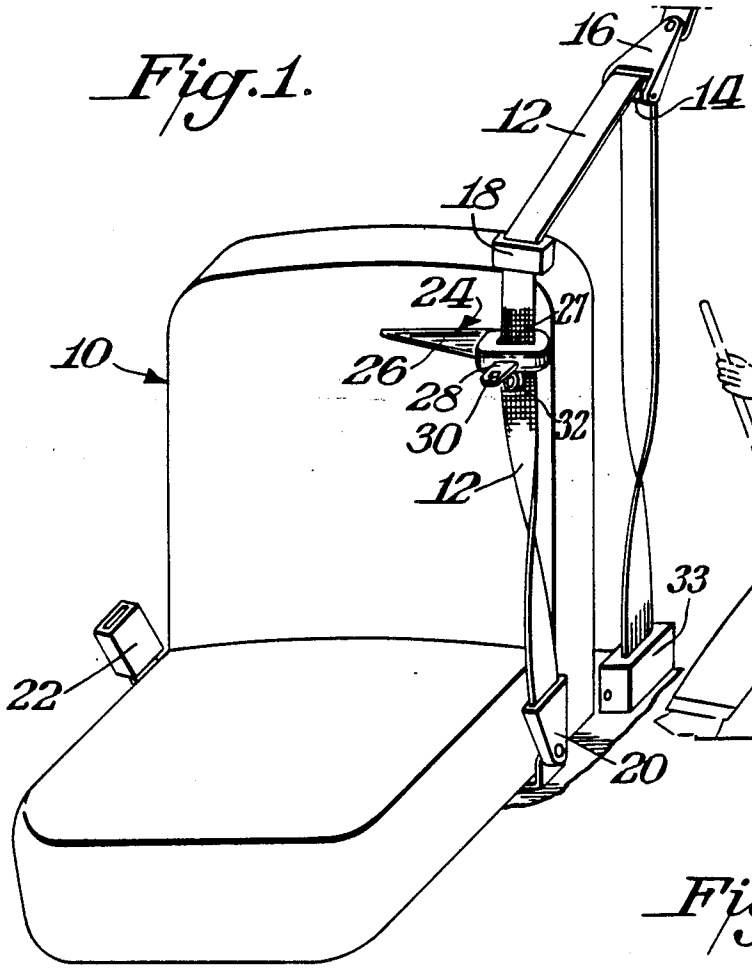

Fig. 1A.

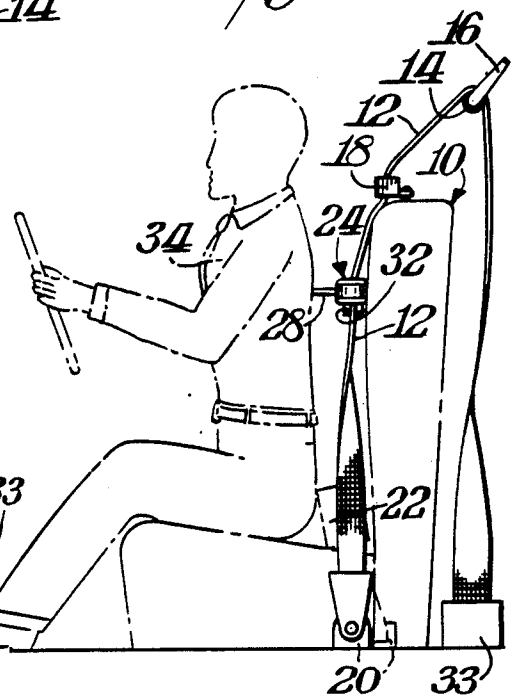

Fig. 2.

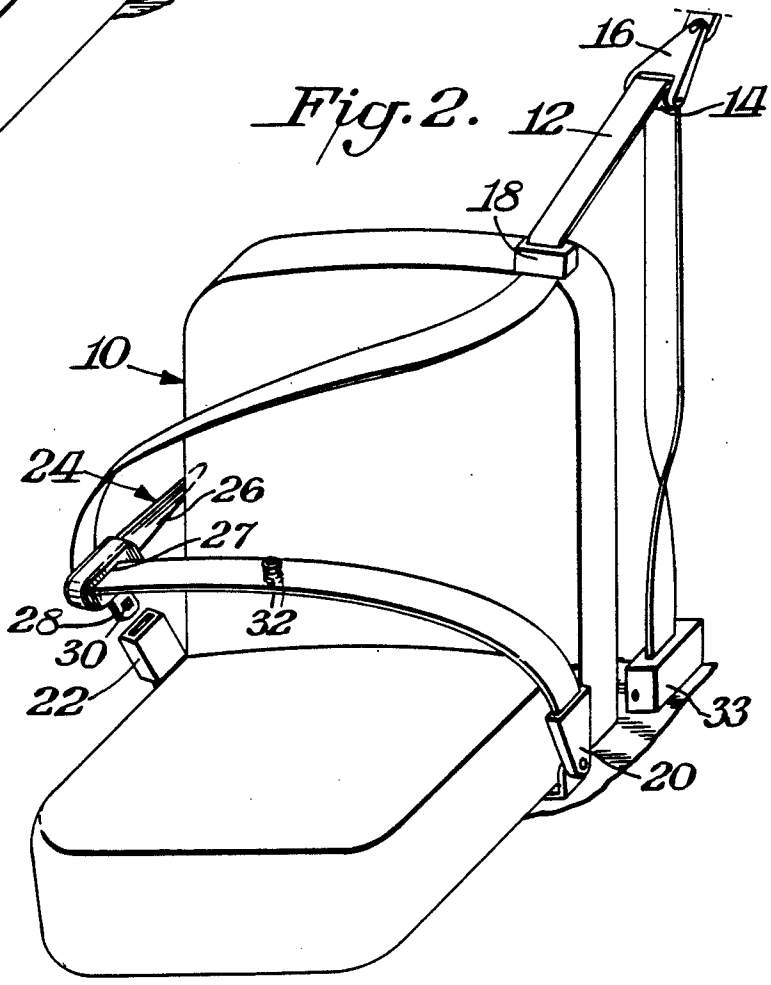

Fig. 4.

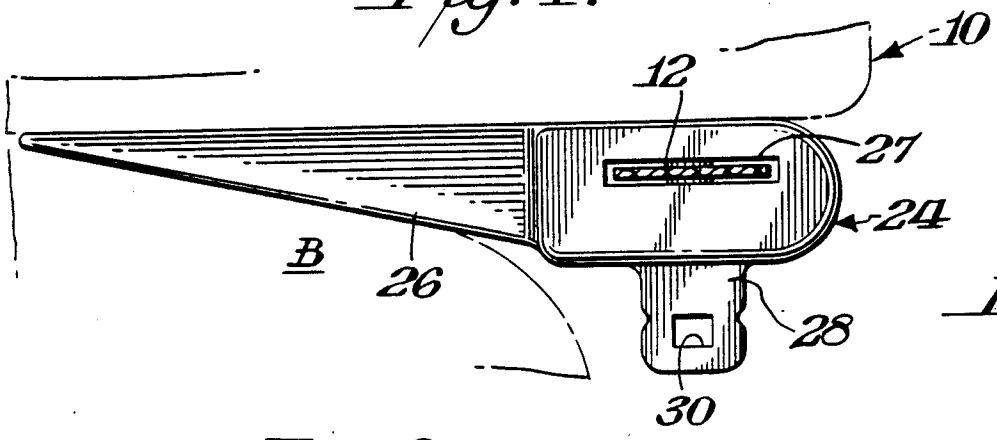

Fig. 5.

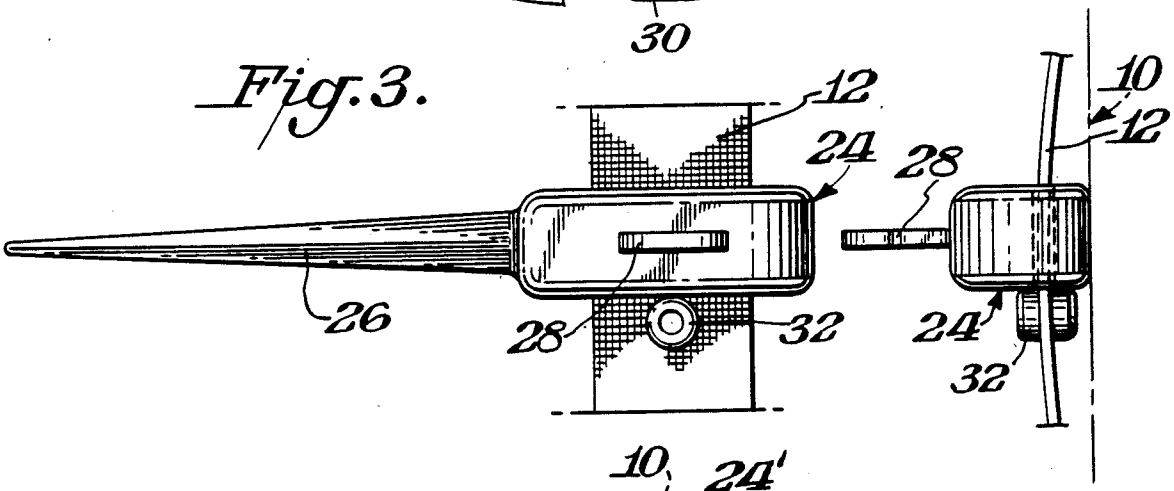

Fig. 3.

Fig. 9.

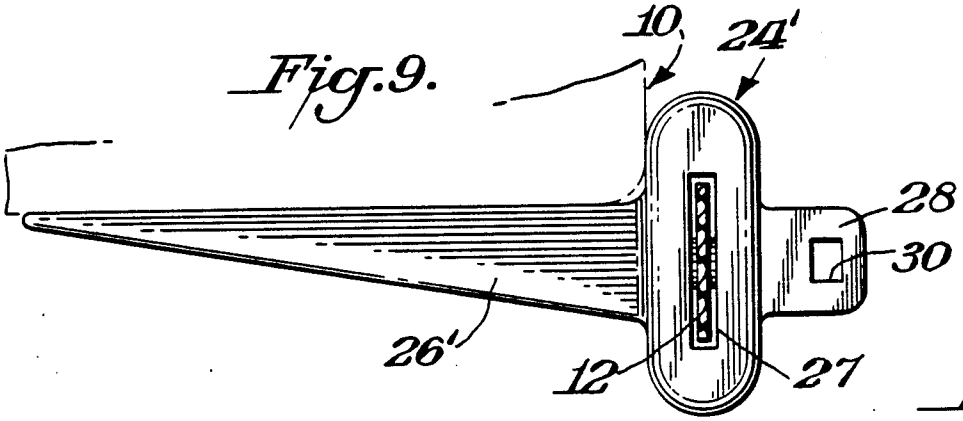

Fig. 10.

Fig. 8.

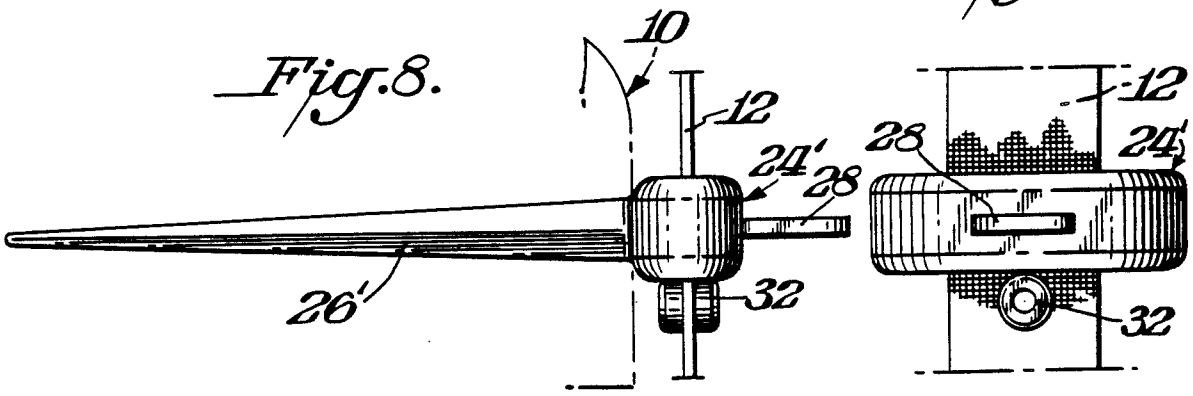

Fig. 6.

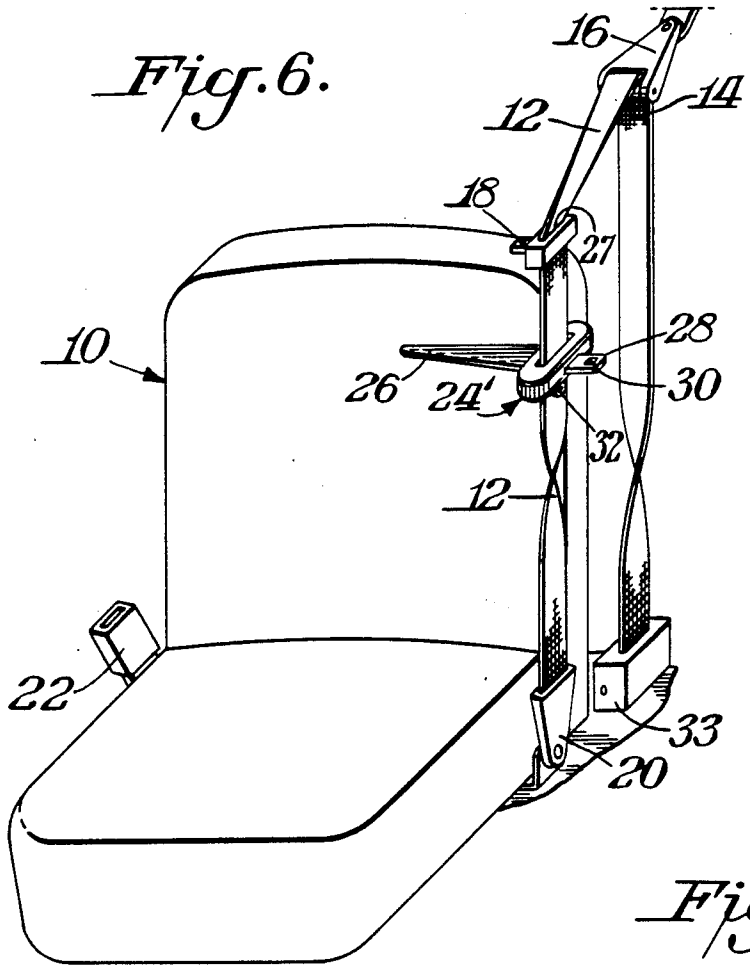
16
14
12
18
27
28
10
26
24'
30
32
12
22
33
20

Fig. 7.

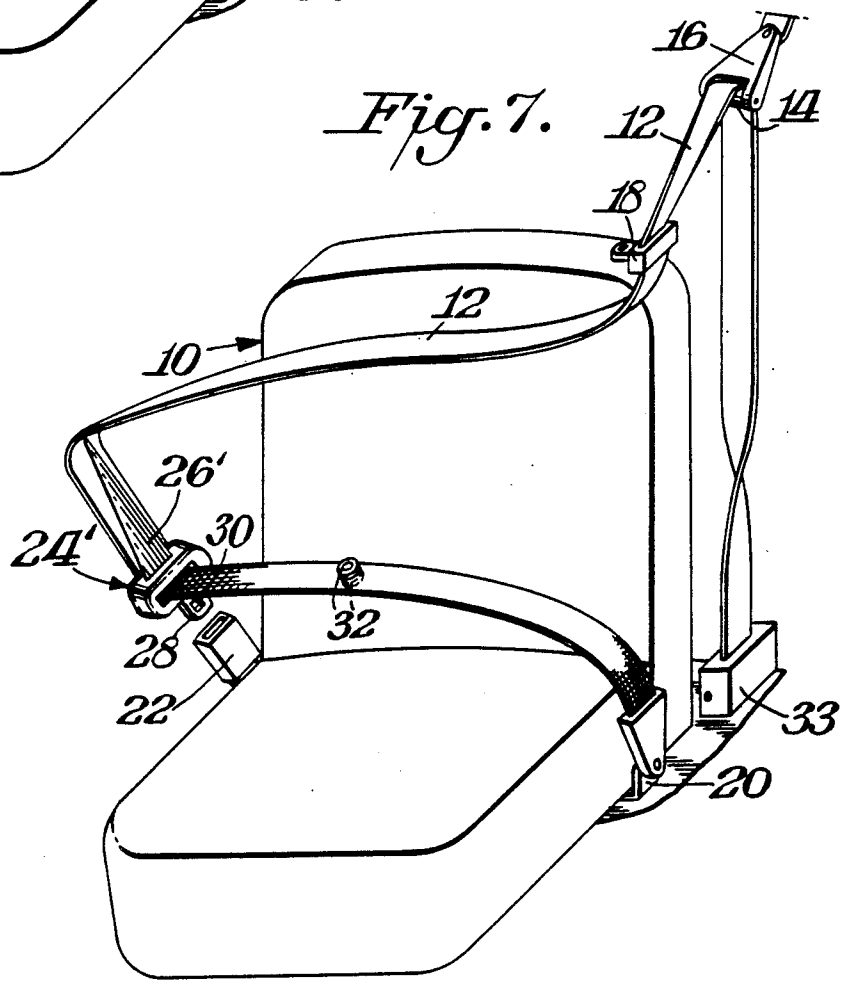
16
14
12
18
12
10
26'
30
24'
32
28
22
33
20

PASSIVE AUTOMOBILE SEAT BELT REMINDING DEVICE

BACKGROUND OF THE INVENTION

This invention relates to safety belts in automotive vehicles.

It is well known statistically that the use of safety belts in automobiles and trucks dramatically reduces the risk of serious injury or death resulting from vehicular accidents. In spite of this known fact, and for various reasons, not all of which are understood, many people will not use their seat belts. Some states, notably Texas and New Jersey, have enacted laws making it illegal not to use one's seat belt.

To overcome this problem of nonuse of seat belts, it is an object of this invention to provide a passive device which reminds persons seated in a vehicle to fasten his or her seat belt. The device causes mild discomfort to the person seated in the vehicle until the seat belt is properly engaged.

SUMMARY OF THE INVENTION

A device is provided which passively reminds persons seated in an automotive vehicle seat to fasten his or her seat belt, the device comprising seat belt clip means for an otherwise conventional seat belt employed in conjunction with the seat, the clip means having a projection extending therefrom such that, when the seat belt is disengaged, the clip is positioned so that the projection extends into the space normally occupied by a user of the seat, and when the seat belt is properly engaged, the clip is positioned so that the projection is stowed unobtrusively out of the way of the user and vehicle controls, thereby causing discomfort to said user of the seat as a result of the projection prodding the user until the user properly engages the seat belt.

BRIEF DESCRIPTION OF THE DRAWINGS

FIG. **1** is a schematic view of the device according to the invention in the disengaged mode.

FIG. **1A** shows a user just after sitting down in a vehicle having the device of the invention.

FIG. **2** shows in detail the engagement of the device according to the invention.

FIGS. **3**, **4** and **5** show front elevation, top plan and side elevational views of a device according to the invention.

FIGS. **6–10** show an alternative embodiment of the invention in views corresponding, respectively, to FIGS. **1–5**.

DETAILED DESCRIPTION OF THE INVENTION AND PREFERRED EMBODIMENTS WITH REFERENCE TO THE DRAWINGS

A device is provided which passively reminds persons seated in a automobile to fasten his or her seat belt. The device comprises seat belt clip means having a projection extending therefrom which, when the seat belt is disengaged, is positioned so that the projection extends to the back of a person who sits in the seat, thereby causing discomfort until the person properly engages the seat belt. When the seat belt is properly engaged, the projection stows unobtrusively out of the way of driver and controls.

A detailed description of the invention and preferred embodiments is best provided with reference to the

accompanying drawings wherein FIG. **1** is a schematic front view of an automobile seat **10** having a seat belt **12** with the passive reminder device **24** of the invention attached thereto in the disengaged position. Seat belt **12** extends through opening **27** in the device **24** and passes upwardly through alignment guide **18**, over guide roller **14** which is anchored by guide roll anchor **16** and thence to spring-loaded take-up roll and lock mechanism **33**. Seat belt **12** passes downwardly through the device of this invention to floor anchor means **20**. In the disengaged mode, the device **24** has a projection **26** extending outwardly from the back of seat **10** into the space normally occupied by a driver or passenger in the vehicle. Device **24** has attached thereto a clip **28** with opening **30** for attachment to clip receiver means **22** when the seat belt is in use. Button **32** holds the body of the device **24** in its proper position when belt **12** is not in use.

FIG. **1A** is a side elevation of a driver or passenger **34** having just sat down in seat **10**. The device **24** has projection **26** which extends outwardly from the back of seat **10** into the back of person **34**, making it uncomfortable until the seat belt **12** is moved into its properly engaged mode, shown in detail in FIG. **2**. As shown in FIG. **2**, to engage the seat belt **12**, the seat belt and device **24** are pulled across the chest of the user, clip **28** is inserted into clip receiver **22** and is held there in place. In this embodiment, the device **24** extends backwardly and unobtrusively out of the way when the seat belt is properly engaged.

FIG. **3** is a front elevation of the device **24** according to the invention showing seat belt **12** extending through the device **24**. In the disengaged mode, button **32** holds the device **24** at its proper elevation.

FIG. **4** is a top plan view of the device **24** showing the general shape of projection **26** in contact with the back "B" of a user (in phantom), extending outwardly from the back of seat **10** into the space occupied by the user.

FIG. **5** is a side elevation of the device **24** in the disengaged position having seat belt **12** passing therethrough and showing clip **28** and button **32**.

Depending upon the positioning of seat belt alignment guide **18** in relation to seat **10**, other configurations of the passive reminder device of this invention may be required. One alternative embodiment is shown in FIGS. **6–10** in which the alternate device **24'** has the clip **28** extending lengthwise therefrom. Projection **26'** acts exactly as projection **26**.

FIG. **7** shows in detail the engagement of this alternate embodiment.

FIGS. **8**, **9** and **10** show front elevation, top plan and side elevational views of the alternate embodiment of the device **24'** according to the invention.

While the invention has been disclosed herein in connection with certain embodiments and detailed descriptions, it will be clear to one skilled in the art that modifications or variations of such details can be made without deviating from the gist of this invention, and such modifications or variations are considered to be within the scope of the claims hereinbelow. For example, the projection **26** could be tubular in shape and be nearly as discomforting as the blade **26** shown.

What is claimed is:

1. A device which passively reminds persons seated in an automotive vehicle seat to fasten his or her seat belt, the device comprising seat belt clip means for an otherwise conventional seat belt employed in conjunc-

tion with said seat, the clip means having a projection extending therefrom such that, when the seat belt is disengaged, said clip means is positioned so that said projection extends into the space normally occupied by a user of said seat, and when the seat belt is properly engaged, said clip means is positioned so that the projection is stowed unobtrusively out of the way of the user and vehicle controls, thereby causing discomfort to said user of said seat as a result of said projection prodding said user until the user properly engages the seat belt.

* * * * *