Jan. 27, 1925.

1,524,246

P. HOYOUX

GOBLET BOX

Filed June 20, 1923

3 Sheets-Sheet 1

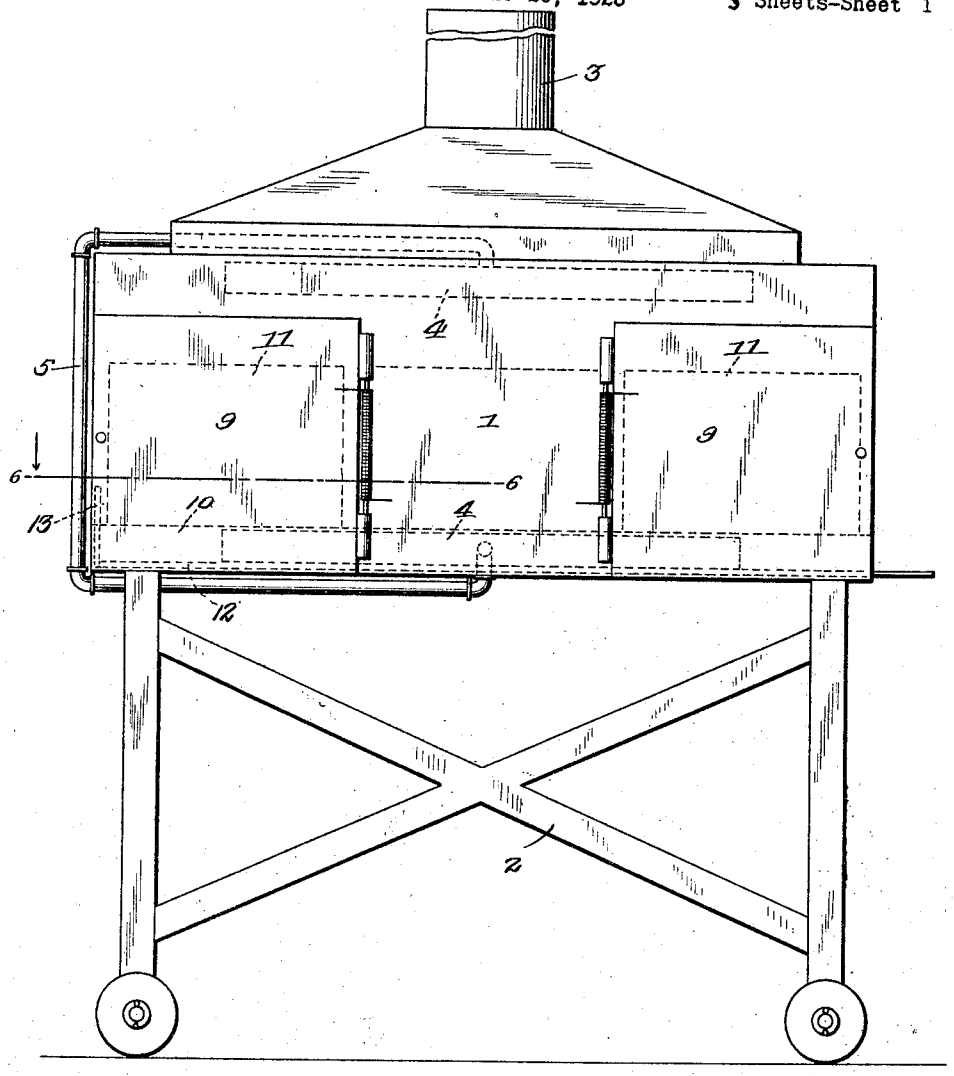

Fig. 1.

Inventor

Pierre Hoyoux,

By L. B. James

Attorney

Jan. 27, 1925.

1,524,246

P. HOYOUX

GOBLET BOX

Filed June 20, 1923

3 Sheets-Sheet 2

Fig. 2.

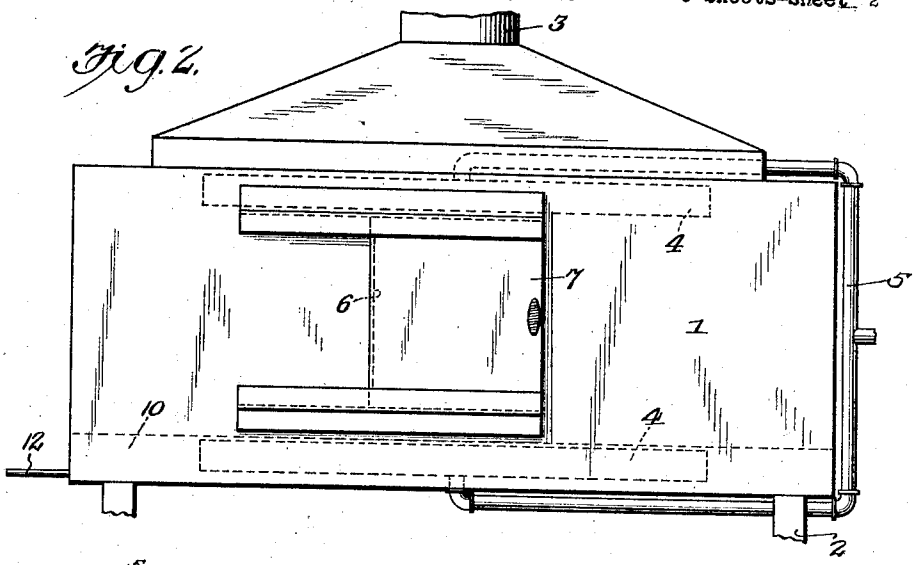

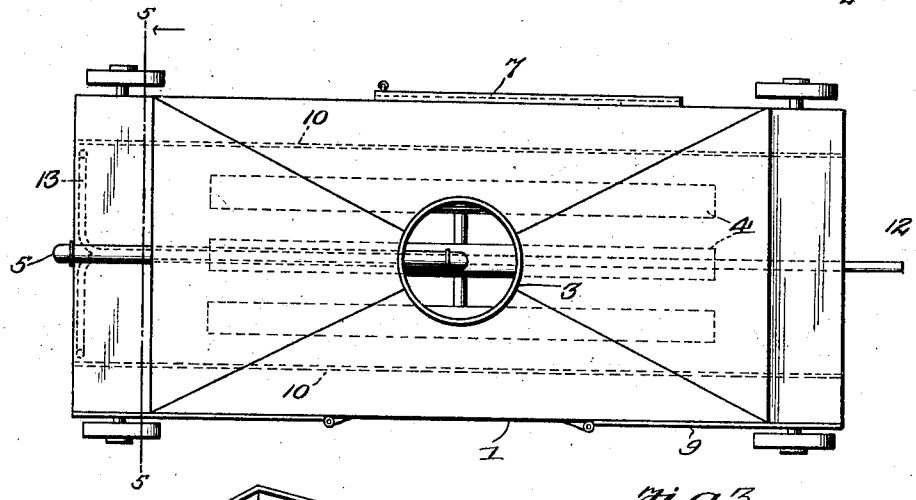

Fig. 3.

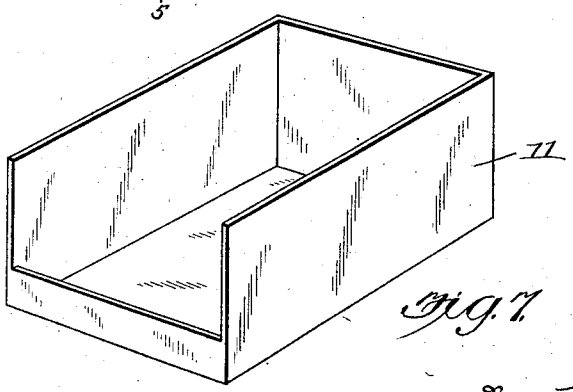

Fig. 7.

Inventor

Pierre Hoyoux,

By L. B. James

Attorney

Jan. 27, 1925 1,524,246

P. HOYOUX

GOBLET BOX

Filed June 20, 1923 3 Sheets-Sheet 3

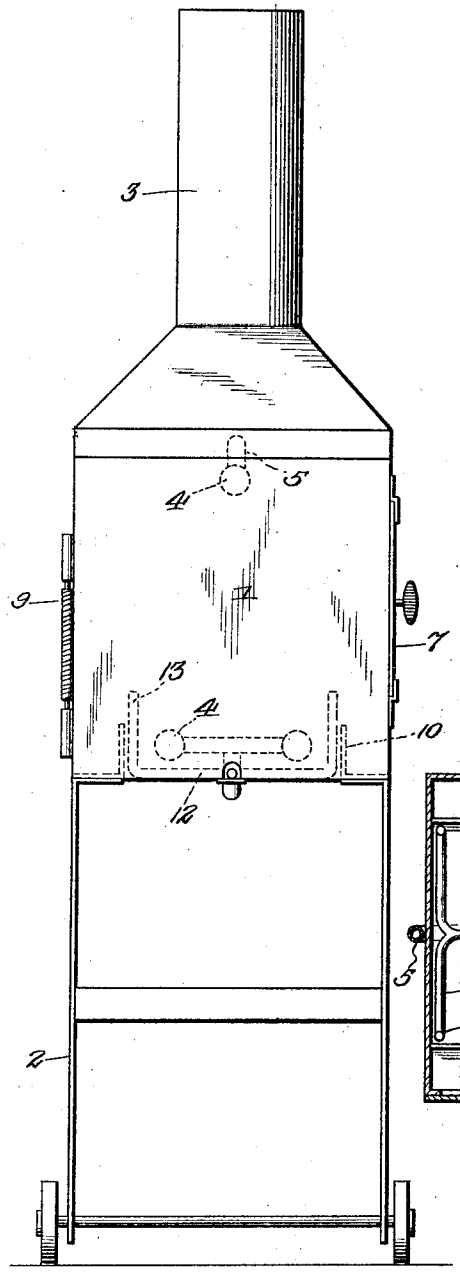

Fig. 4.

Fig. 5.

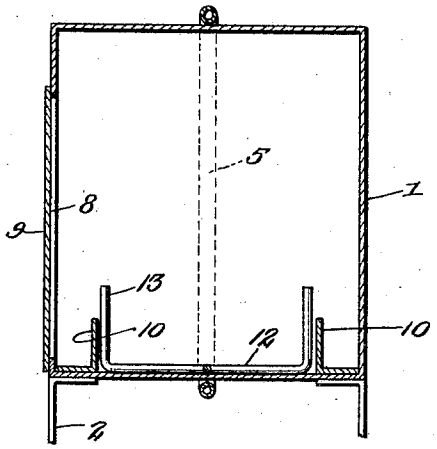

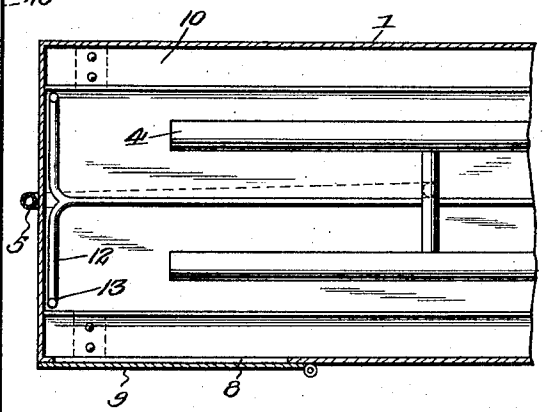

Fig. 6.

Inventor
Pierre Hoyoux,
By L. B. James
Attorney

Patented Jan. 27, 1925. 1,524,246

UNITED STATES PATENT OFFICE.

PIERRE HOYOUX, OF ROCHESTER, PENNSYLVANIA.

GOBLET BOX.

Application filed June 20, 1923. Serial No. 646,689.

To all whom it may concern:

Be it known that I, PIERRE HOYOUX, a citizen of the United States, residing at Rochester, in the county of Beaver and State of Pennsylvania, have invented new and useful Improvements in Goblet Boxes, of which the following is a specification.

This invention relates to a goblet handling device, the general object of the invention being to provide means for facilitating the handling of goblets and for keeping them hot until they are taken to the leers.

This invention also consists in certain other features of construction and in the combination and arrangement of the several parts, to be hereinafter fully described, illustrated in the accompanying drawings and specifically pointed out in the appended claim.

In describing my invention in detail, reference will be had to the accompanying drawings wherein like characters denote like or corresponding parts throughout the several views, and in which:

Fig. 1 is an elevation of one side of the device.

Fig. 2 is an elevation of the opposite side.

Fig. 3 is a plan view.

Fig. 4 is an end view.

Fig. 5 is a section on line 5—5 of Fig. 3.

Fig. 6 is a section on line 6—6 of Fig. 1.

Fig. 7 is a perspective view of one of the trays.

In these views 1 indicates a case which is placed upon the wheeled truck 2 and which has a chimney 3 connected with its top. The case is provided with the heating elements 4 which are connected together by the pipes 5. One side of the case is provided with an opening 6 which is closed by a sliding door 7 and the other side of the case is provided with a pair of openings 8 which are closed by the spring doors 9. The openings 8 are arranged at the ends of the case while the opening 6 is at the center thereof. Angle irons 10 are arranged in the case to receive the trays 11, the angle irons being so arranged that the trays will be arranged above the lower heating elements 4. A rake 12 is slidably mounted in the casing with its handle projecting from one end thereof and with its prongs 13 arranged to engage the trays resting upon the angle iron supports.

The goblets are placed in the trays after they have had their unfinished tops cracked off and the trays placed in the case so that the goblets will remain hot until they are taken to the leers. The goblets are placed in a tray which has been placed in the case through one of the openings 8 and as soon as this tray is full it is moved towards one end or the other so that it can be removed through one of the doors 9, the goblets being placed in the tray through the door 6. The trays are moved by the rake.

By this invention the goblets first cracked off are kept ready for the leers and can be removed from the case while the other tray is being filled from the other side of the case by the finisher.

It is thought from the foregoing description that the advantages and novel features of my invention will be readily apparent.

I desire it to be understood that I may make changes in the construction and in the combination and arrangement of the several parts, provided that such changes fall within the scope of the appended claim.

What I claim is:

A device of the character set forth comprising a wheeled truck, a casing supported thereon, heating elements adjacent the top and bottom of the casing, a pair of doors hinged in close proximity on one side of the casing, springs for holding the doors closed, a laterally slidable door at the center of the other side of the casing, tray supporting means above the bottom of the casing, and a rake slidably disposed on the bottom of the casing with its inner ends directed in the path of the trays.

In testimony whereof I affix my signature.

PIERRE HOYOUX.