Jan. 2, 1968 K. C. SCHNEIDER 3,361,120

CARBURETOR IDLING SYSTEM

Filed July 13, 1965 3 Sheets-Sheet 1

FIG. 1

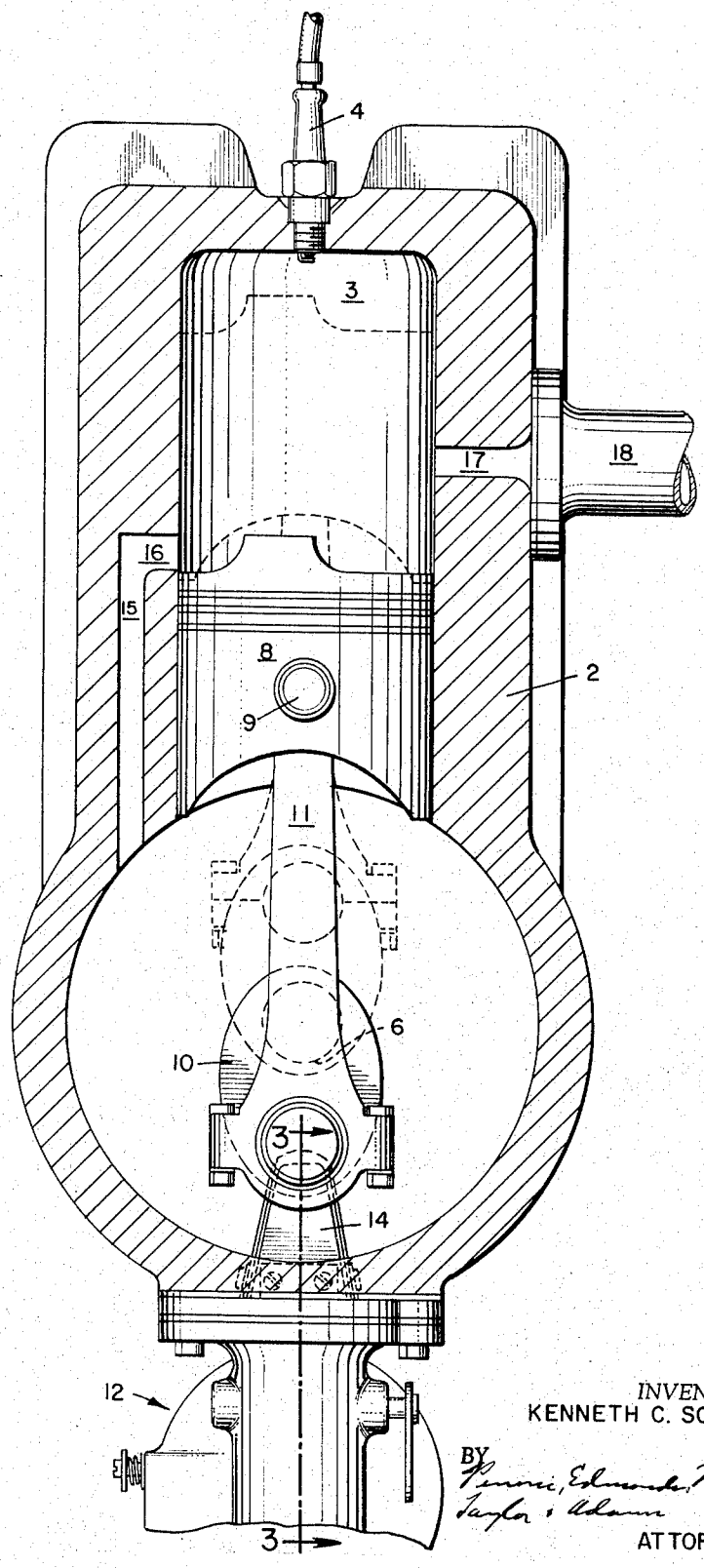

INVENTOR.
KENNETH C. SCHNEIDER

BY Pennie, Edmonds, Morton, Taylor & Adams

ATTORNEYS

Jan. 2, 1968 K. C. SCHNEIDER 3,361,120

CARBURETOR IDLING SYSTEM

Filed July 13, 1965 3 Sheets-Sheet 2

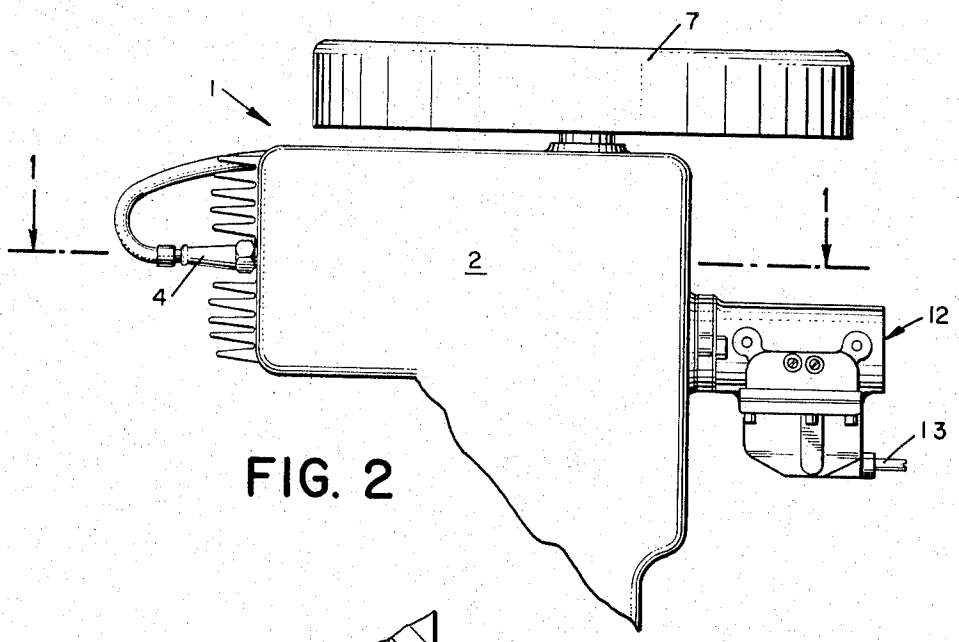

FIG. 2

FIG. 3

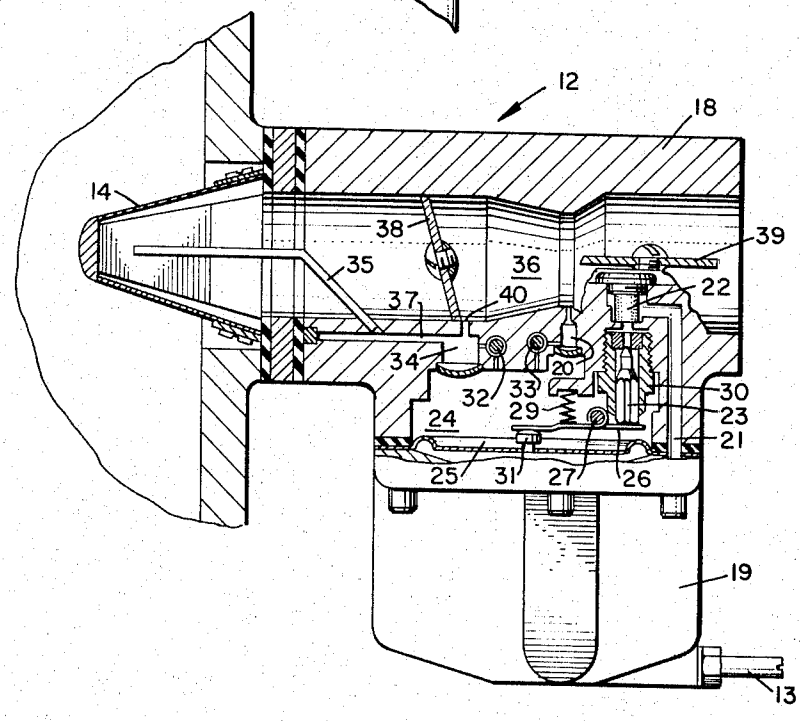

INVENTOR.
KENNETH C. SCHNEIDER

BY

Pennie, Edmonds, Kinney, Taylor & Adams

ATTORNEYS

Jan. 2, 1968 K. C. SCHNEIDER 3,361,120

CARBURETOR IDLING SYSTEM

Filed July 13, 1965 3 Sheets-Sheet 3

FIG. 4

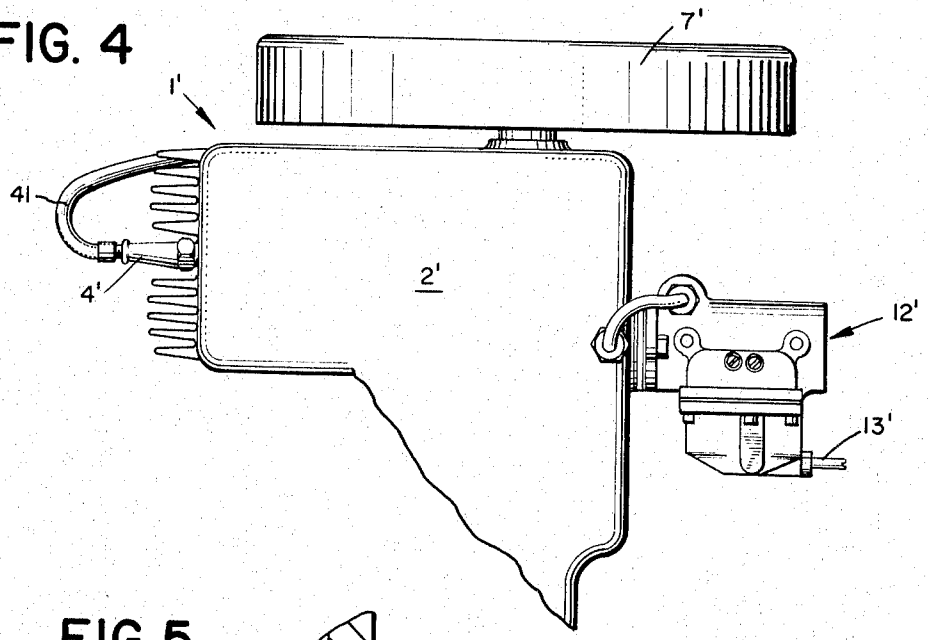

FIG. 5

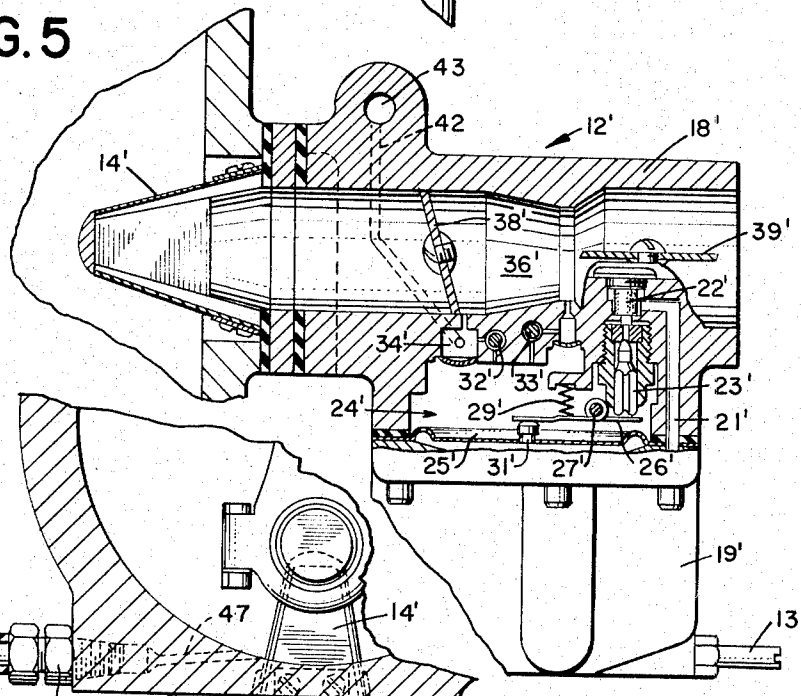

FIG. 6

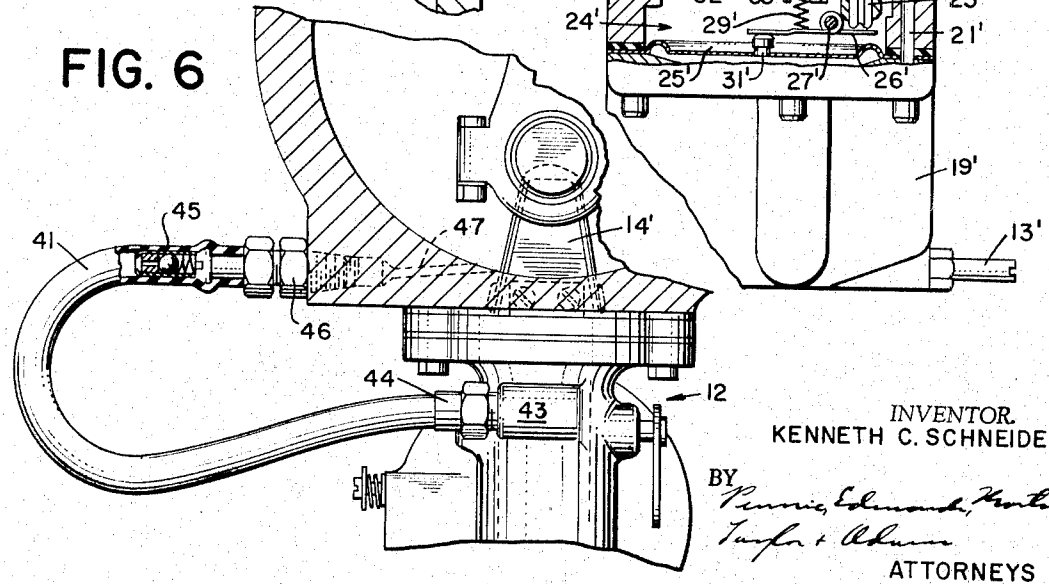

INVENTOR.
KENNETH C. SCHNEIDER

BY Pennie, Edmonds, Morton, Taylor & Adams

ATTORNEYS

United States Patent Office 3,361,120
Patented Jan. 2, 1968

3,361,120

CARBURETOR IDLING SYSTEM

Kenneth C. Schneider, Bethel, Conn., assignor, by mesne assignments, to Walbro Corporation, Cass City, Mich., a corporation of Michigan

Filed July 13, 1965, Ser. No. 471,519
3 Claims. (Cl. 123—73)

This invention relates to carburetors having an improved idling system for two-cycle internal-combustion engines. More specifically, it provides that during idling, fuel be introduced into the airstream downstream from the usual air-fuel mixing point.

In many instances, the idling systems of previous carburetors were not entirely satisfactory since some of the fuel which entered during idling had a tendency to collect within the carburetor itself and the intake manifold. The conventional carburetor has an air-fuel mixing chamber, through which an airstream passes, and a throttle plate within this chamber. Fuel generally enters the mixing chamber through two openings in the chamber wall. One opening is on the upstream side of the throttle plate and fuel enters the mixing chamber through it during open throttle conditions. The other opening is normally on the downstream side of the throttle plate and supplies fuel during idling conditions when the throttle plate is substantially closed.

A problem arises concerning the supply of fuel during idling conditions. Since the throttle plate is substantially closed, and the engine is operating at low speeds, the entering fuel is not entirely carried into the engine. The result is the collection of raw fuel lying in the mixing chamber and the intake manifold. Subsequently, when the throttle plate is opened for high speed oepration, this entire collection of fuel is blown into the engine at one time by the increased air supply. This causes an overly rich mixture of fuel to enter the engine and probably stall it. In any event, such an overly rich mixture will be highly inefficient. When the throttle plate is allowed to remain in the idle position and the attitude of the engine is changed, the raw fuel which has been collected enters the crankcase and the engine stalls due to over-richness.

The present invention solves the problem of surges of everly rich mixtures which follow an idling condition by providing an idling system which supplies fuel at a point substantially downstream from the conventional place it enters. Specifically, this invention contemplates the combination of a carburetor for feeding an air-fuel mixture into the crankcase of a two-cycle internal-combustion engine and one-way valve means for preventing reverse flow of the air-fuel mixture from the crankcase into said carburetor. The carburetor includes an air-fuel mixing chamber through which an airstream enters the crankcase, a throttle valve in the mixing chamber for controlling the flow therethrough by movement between closed and open positions, and a fuel conducting means for maintaining a supply of fuel within the carburetor. An idling means is also contemplated which communicates with the fuel conducting means, and introduces the fuel into the airstream at a point downstream from the mixing chamber and adjacent the one-way valve.

There are two preferred embodiments of the idling means. They are where the idling means is inside the carburetor and fuel enters the airstream immediately upstream of the one-way valve, and where the idling means is substantially external to the carburetor and fuel enters the airstream immediately downstream of the one-way valve.

The preferred embodiments of the invention are described below with reference to the accompanying drawings, wherein:

FIG. 1 is a fragmentary section taken along the axis of a cylinder of a two-cycle internal-combustion engine;

FIG. 2 is a fragmentary elevation of the engine with a carburetor employing the improved internal idling system;

FIG. 3 is an enlarged fragmentary elevation, partly broken away, of the carburetor of FIG. 1;

FIG. 4 is a fragmentary elevation of the engine with a carburetor employing the new external idling system;

FIG. 5 is an enlarged fragmentary elevation, partly broken away, of the carburetor of FIG. 4; and

FIG. 6 is an enlarged section, partly broken away, which shows the external connections of the improved idling system of FIG. 4.

FIGS. 1, 2 and 4 show a two-cycle internal-combustion engine having a crankcase **1**, a cylinder **2**, and one of two twin cylinder chambers **3**. The cylinder chamber **3** is equipped with a conventional spark plug **4**, which is connected to the usual ignition system. A crankshaft **6** is rotatably mounted within the crankcase **1** and has a flywheel **7**, which is outside the crankcase, connected to its end. One end of the crankshaft **6** is operatively connected to a driven element; for example, the propeller of an outboard motor or the chain of a chain saw. Within the cylinder chamber **3** is a piston **8** positioned for reciprocating movement and linked to the crankshaft **6** by means of a wrist pin **9**, a piston rod **11** and an eccentric **10** in the conventional manner. Though they are not visible in FIGS. 1 or 2, pistons similar to piston **8** may be located within the cylinder housing **2** and be operatively connected to the crankshaft **6** in the same manner.

An air-fuel inlet passage **15** connects the interior of the crankcase **1** with the cylinder chamber **3**. An inlet port **16** defines the chamber end of passage **15** at a point above the top of the piston **8** when it is at its lowest position. Above the inlet port, an exhaust port **17** connects the cylinder chamber **3** with an outlet manifold **18**.

A carburetor **12** having a fuel inlet **13** is connected to the crankcase **1**. An inlet one-way valve **14** is associated with the carburetor **12** and the crankcase **1**, as shown in FIG. 1. One-way valve **14** is shown as a pyramid-shaped reed valve but may be any one of various types of one-way valves.

The operation of this engine will be described with reference to only one cylinder, though it is to be understood that other cylinders may function in the same manner. When the piston **8** is at top dead-center position (as shown by the dotted lines in FIG. 1), the air-fuel mixture in the cylinder chamber **3** is compressed and ignited by the spark plug **4**. The expanding gases drive the piston downwardly on its power stroke causing the pressure within the crankcase **1** to be increased to above-atmospheric pressure. When the eccentric **10** is at approximately 90° from its original position, the working face of the piston **8** clears the exhaust port **17**. As the piston approaches its bottom dead-center position, it clears the primary entry port **16**, thereby causing the pressurized air-fuel charge within the passage **15** to be carried into the cylinder chamber **3**. After passing through the bottom dead-center position (as shown in solid lines in FIG. 1), the piston **8** moves upwardly, sequentially closing the primary entry port **16**, causing the burned gases to be scavenged from the cylinder chamber **3** through the exhaust port **17** and sealing off the exhaust port **17**. The piston then compresses the new air-fuel charge mixture as it moves to its top dead-center position. The upward movement of piston **8** causes a vacuum in crankcase **1**, thereby drawing an air-fuel charge into it from the carburetor **12**.

FIG. 3 shows the carburetor **12** in detail. It includes a body structure indicated by **18**, an air-fuel mixing chamber **36**, and the fuel inlet passage **13**. Reservoir means **24** is provided to maintain a supply of fuel for passage into

the mixing chamber 36 through a main jet 20. A pump 19, which may be the conventional diaphragm type, is positioned between and connects with fuel inlet passage 13 and a fuel passage 21 which leads to a removable filter 22 and a needle inlet valve 23. The needle valve 23 is engaged by one end of a lever 26 which is pivoted about a pin 27 and urged toward a closed position by a helical compression spring 29. The needle valve 23 is slidably mounted in a seat 30 so that clockwise pivoting of the lever 26 against the force of the spring 29 causes the inlet valve 23 to be opened to increase the flow of fuel into the reservoir 24. The end of lever 26, remote from the needle valve, rests on an abutment 31 secured to a flexible diaphragm 25. The upper surface of the diaphragm 25 defines the bottom of the reservoir 24 and the opposite lower surface is exposed to atmospheric pressure.

Another needle valve 32 controls flow into an auxiliary chamber 34 and an idling tube 35. A passage 37 connects the idling tube 35 to the auxiliary chamber 34. The idling tube 35 is partially located in the air-fuel mixing chamber 36, extends into the crankcase 1 along the central axis of this mixing chamber and ends adjacent the upstream side of the one-way valve 14.

A throttle plate 38 and choke plate 39 are provided in the air-fuel mixing chamber 36 and operate in the conventional manner. Throttle plate 39 usually has a hole therein to provide air under idling conditions when it is closed. However, throttle plate 38 may be left slightly open to achieve the same result of providing air under idling conditions. Additional air may be introduced into the idling fuel system through an air bleed 40 connecting the mixing chamber 36 and the auxiliary chamber 34 on the upstream side of the throttle plate 38 when the throttle plate is closed.

Fuel enters the carburetor 12 through the inlet passage 13, is drawn through the pump 19, and passes into the fuel passage 21. The fuel then proceeds through the filter 22 to the needle valve 23 which controls the flow into the reservoir 24. Variations in pressure within the reservoir 24 cause flexure of the diaphragm 25 which actuates the inlet valve 23 to maintain the reservoir 24 at proper capacity.

When the throttle plate 38 is open, the great majority of the fuel will leave reservoir 24 past the valve 33 and through main jet 20. However, when throttle plate 38 is closed, fuel will enter the airstream by passing by the valve 32 and through auxiliary chamber 34, passage 37 and tube 35.

When throttle plate 38 is substantially closed, the passage of fuel through tube 35 causes the fuel to enter the airstream at a point downstream of the carburetor 12. The entrance of fuel at this point enables it to flow more efficiently into crankcase 1 and eliminates the previous problem of collections of raw fuel within the mixing chamber 36 during idling. The resulting subsequent stalling and inefficient operation is similarly abolished.

FIGS. 4 and 5 are similar to FIGS. 2 and 3, respectively, but show the external idling system. Primed numbers have been used in FIGS. 4 and 5 to indicate the corresponding members shown in FIGS. 2 and 3. In FIG. 4, an external tube 41 is provided as a fuel supply means during idling instead of the internal tube 35. As shown in FIG. 5, a passage 42 within body structure 13' runs from the auxiliary chamber 34' to a well 43.

One end of the tube 41, as shown in FIG. 6, is connected to well 43 by an end fitting 44. The opposite end of tube 41 is connected to a passage 47 in the wall of the crankcase 1 by an end fitting 46. Passage 47 ends at a point adjacent the downstream side of the one-way valve 14'. "Stream" as used herein means the air-fuel flow through the carburetor 12', valve 14', crankcase 1' and into the cylinder chamber 3. Within tube 41, a spring biased check valve 45 is provided to prevent reverse flow from the crankcase 1'.

The idling system shown in FIGS. 4, 5 and 6 directly delivers fuel to crankcase 1 and thus also prevents the collection of fuel within air-fuel chamber 36' in carburetor 12' during idling.

Both the internal and external idling systems have been described with reference to specific carburetors and valves. However, it is anticipated that other types of carburetors and valves may be used with the present invention.

I claim:

1. A carburetor-engine combination which comprises:
   (a) an internal-combustion engine having a crankcase, a cylinder and a piston operating in a two-cycle action and an inlet for fuel in said cylinder,
   (b) a one-way inlet valve in a wall of said crankcase,
   (c) a diaphragm carburetor mounted adjacent said engine cylinder having a venturi mixing passage opening directly to said cylinder inlet, said carburetor having a diaphragm controlled chamber, a main fuel jet opening to said venturi passage from said chamber and an auxiliary chamber connected to said diaphragm controlled chamber,
   (d) means within said carburetor forming a passage for idle fuel supply leading from said auxiliary chamber toward said engine, and
   (e) fuel directing means in the form of a conduit for said idle fuel supply leading from said passage for idle fuel supply to a point within said crankcase adjacent said one-way valve.

2. A carburetor-engine combination as defined in claim 1 in which said one-way inlet valve comprises a hollow, conically shaped housing having a base mounted in a wall of said crankcase and an apex extending into said cylinder, and said fuel directing means extends into said housing to a point adjacent the apex well within said crankcase.

3. A carburetor-engine combination as defined in claim 1 in which said one-way inlet valve comprises a hollow, conically shaped housing having a base mounted in a wall of said crankcase and an apex extending into said crankcase, and said fuel directing means extends through a wall of said crankcase to a point adjacent said one-way valve housing.

References Cited

UNITED STATES PATENTS

1,624,024	4/1927	Svensson et al.	123—73
1,999,520	4/1935	Stout	123—73
2,442,217	5/1948	Smith	123—73
2,639,699	5/1953	Kiekhaefer	123—73
2,759,716	8/1956	Jones	261—41
2,779,576	1/1957	Morgenroth	261—64
3,201,097	8/1965	Arndt	261—41

AL LAWRENCE SMITH, *Primary Examiner.*