United States Patent [19]

Gateshill et al.

[11] **3,905,555**

[45] **Sept. 16, 1975**

[54] **APPARATUS FOR DEPOSITING SOLID CARBON DIOXIDE**

[75] Inventors: **Henry Charles Gateshill**, Rotherham; **Norris Wilfred Shepherd**, Worksop, both of England

[73] Assignee: **Air Products and Chemicals, Inc.**, Allentown, Pa.

[22] Filed: **Dec. 21, 1973**

[21] Appl. No.: **427,398**

[30] **Foreign Application Priority Data**

June 1, 1973 United Kingdom..... 26349/73

[52] **U.S. Cl.**..... **239/573;** 239/551

[51] **Int. Cl.²**..... **B05B 01/30**

[58] **Field of Search** 239/562, 550, 569, 551, 239/572, 573; 62/384, 514, 63, 74, 64; 169/11, 74, 90

[56] **References Cited**

UNITED STATES PATENTS

2,109,966	3/1938	Breitmann	169/74
2,289,352	7/1942	Ensminger	169/11
2,457,526	12/1948	Brown	239/574
3,447,755	6/1969	Cartwright	239/551

Primary Examiner—John J. Love

Attorney, Agent, or Firm—Richard A. Dannells; Barry Moyerman

[57] **ABSTRACT**

An apparatus is provided for an improvement in the production of solid carbon dioxide in the form of a fine powder referred to herein as snow which comprises a control valve and a nozzle positioned upstream from the control valve which is suitable for releasing compressed liquid carbon dioxide to produce the carbon dioxide snow. The preferred form of control valve is a rotary ball valve.

10 Claims, 2 Drawing Figures

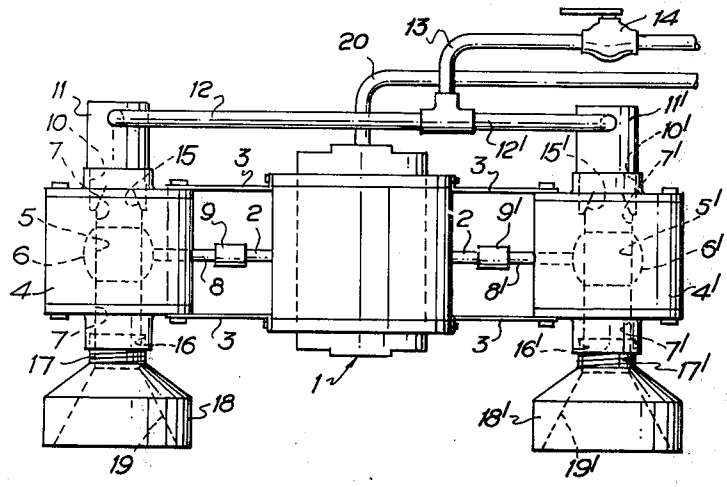

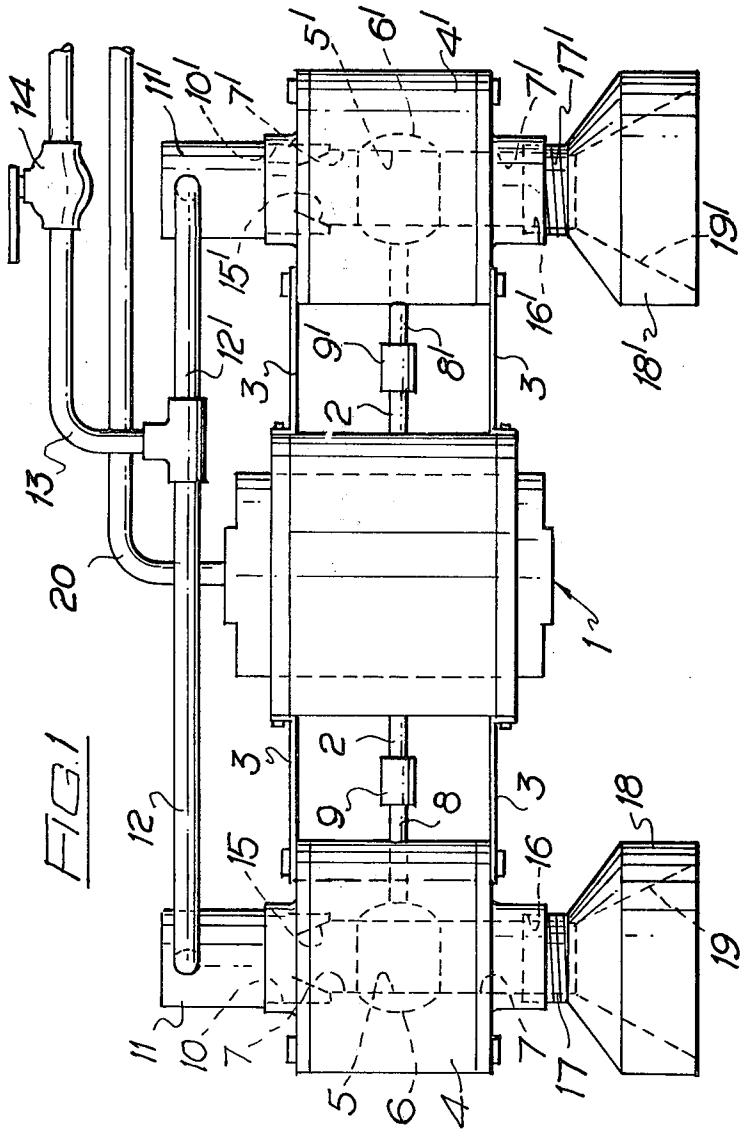
14
11'
10'
7'
5'
6'
4'
7'
17'
19'
15'
16'
18'
12'
9'
8'
3'
2
13
20
1
3
2
9
8
3
12
15
16
18
19
11
10
7
5
6
4
7
17

FIG. 1

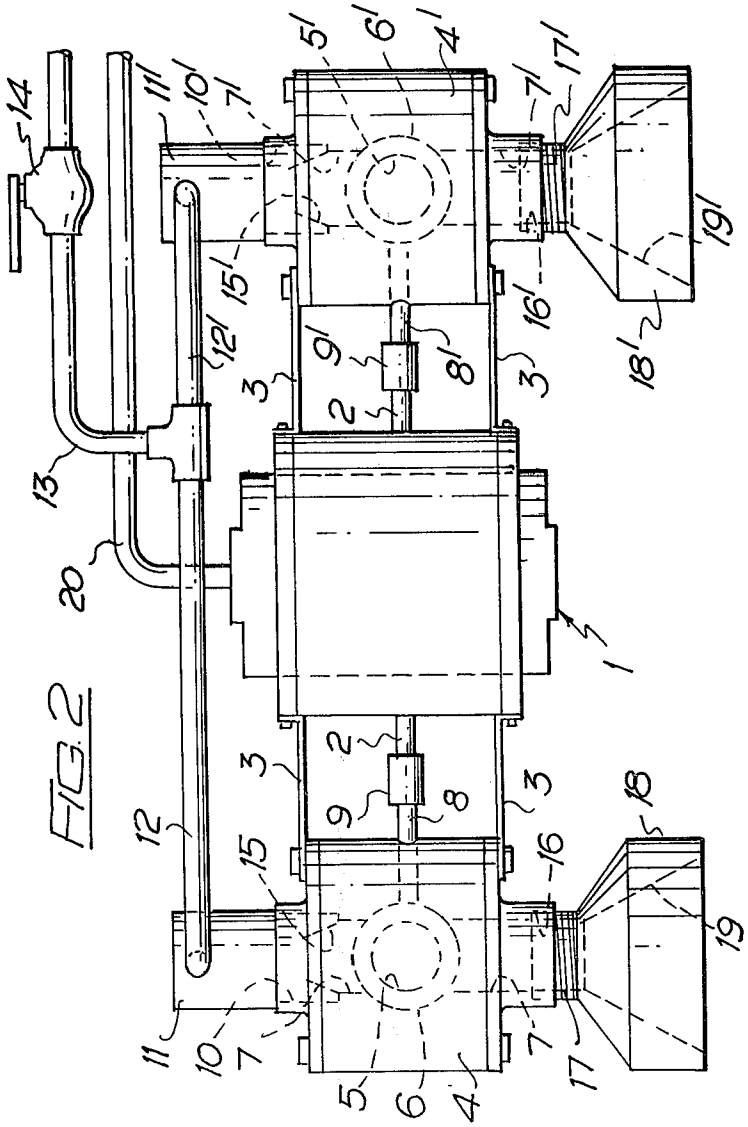
14
11'
10'
7'
5'
6'
4'
17'
7'
19'
15'
16'
18'
12'
9'
8'
3
2
13
20
1
12
15
16
18
19
11
10
7
5
6
4
17

FIG. 2

APPARATUS FOR DEPOSITING SOLID CARBON DIOXIDE

BACKGROUND OF THE INVENTION

The present invention relates to apparatus for depositing solid carbon dioxide in the form of a fine powder hereinafter called snow.

The preferred form of apparatus in accordance with the present invention employs a nozzle having an outwardly expanding mouth fed from an annular passage. The nozzle preferably comprises a hollow housing member having a central bore terminating in an expanding mouth and a spindle centrally supported within the bore and terminating in an expanding head defining the said passage. The spindle is preferably movable axially relative to the housing to enable control or adjustment of the passage cross-section. However, the present invention in broad terms is not limited to apparatus employing such a nozzle but can employ any type of nozzle suitable for releasing compressed liquid carbon dioxide to produce carbon dioxide snow.

It has been found that a considerable problem arises in switching the carbon dioxide snow on and off particularly where this is done rapidly and successively e.g., by an automatic trip mechanism. Thus, when an on/off valve situated in the liquid carbon dioxide line is switched off, liquid carbon dioxide tends to remain between the control valve and the nozzle and in the nozzle itself and this tends to solidify and block the passage.

SUMMARY OF THE INVENTION

In accordance with the present invention, there is provided apparatus for the production of carbon dioxide snow comprising a nozzle connected upstream of a control valve. The control valve should be of a type capable of resisting the full pressure of the liquid carbon dioxide in the off position and should afford a through passage of a sufficiently large cross-sectional area as to offer substantially no resistance to the flow of carbon dioxide snow when open.

The preferred form of control valve is a rotary ball valve. Such ball valves are well-known commercial products and comprise a rotatable steel ball having a through passage and fitting in a seat in a tubular duct so that in the off position the through passage is at right angles to the duct and in the on position it is aligned axially with the duct. Conventional ball valves of this type normally have a through passage of restricted diameter relative to the duct but the preferred ball valve used in the present invention has a through passage which is of substantially the same diameter as the duct, so that in the open position a virtually unobstructed passage is presented to the snow leaving the nozzle.

The duct in the control valve preferably has substantially the same diameter as the adjacent end of the mouth of the nozzle, and the duct in the control valve preferably has a counterbore into which the nozzle is directly secured.

While clearly a shut-down valve is preferably inserted in the input line to the nozzle for use when the nozzle is out of operation for long periods, while the nozzle is in the course of intermittent use the liquid carbon dioxide is fed unobstructed to the nozzle and the flow is entirely controlled by the control valve downstream of the nozzle.

The control valve, particularly in the form of a rotary ball valve as described, is conveniently operated by means of a pneumatic or electrical actuator and a plurality of nozzle and valve combinations may be controlled from a single actuator. The preferred form of apparatus employs a central actuator, preferably of the pneumatic type, connected to a pair of nozzle/valve combinations, one on each side.

A short expansion head may be secured to the downstream end of the control valve duct, e.g., by having a tubular spigot secured in a counterbore in that end of the duct.

BRIEF DESCRIPTION OF THE DRAWINGS

A preferred embodiment is hereafter described with reference to the accompanying drawings, in which FIGS. 1 and 2 are side elevational views of a nozzle and valve assembly in accordance with the invention, FIG. 1 showing the open condition of the valves and FIG. 2 showing the closed condition of the valves.

DETAILED DESCRIPTION OF THE INVENTION AND DRAWINGS

The assembly illustrated comprises a central pneumatic actuator **1** of a standard commercial type employing a through axle **2** which rotates 90° between end positions mounted to each side of the actuator, in line with the axle **2**, by means of brackets **3**, is a pair of rotary ball valves **4, 4'** which are identical Worcester ball valves modified in that the through passages **5, 5'** in the balls **6, 6'** are bored out to the same diameter as the ducts **7, 7'** of the valves. The balls **6, 6'** are secured to respective axles **8, 8'** which are connected to respective ends of the axle **2** by means of couplings **9, 9'**.

The upstream ends **10, 10'** of the ducts **7, 7'** of the valves are counterbored and into these counterbores are secured the mouth ends of nozzles **11, 11'** for producing carbon dioxide snow from liquid carbon dioxide supplied under pressure through pipes **12, 12'** from a single pipe **13** with a shut-down valve **14**. The mouth **15, 15'** of the nozzles are clear of the balls **6, 6'** of the valves **4, 4'**, and the ducts **7, 7'** have the same diameter as the adjacent ends of the mouths.

The downstream ends **16, 16'** of the ducts **7, 7'** of the valves are counterbored and threaded to receive externally threaded tubular spigots **17, 17'** of expansion heads **18, 18'** having frusto-conical inner surfaces **19, 19'**.

In operation the actuator **1** is energised by air or (conveniently) gaseous carbon dioxide supplied through a pipe **20**, to rotate the balls **6, 6'** synchronously from the closed position (FIG. 2) to the open position (FIG. 1) and vice-versa. In the closed condition of the valves **4, 4'** the nozzle mouths **15, 15'** and upstream portions of the ducts **7, 7'** are filled with liquid carbon dioxide. When the valves are opened, the liquid carbon dioxide expands through the nozzles and forms snow which passes through the passages **5, 5'** and the downstream portions of the ducts to the expansion heads **18, 18'**. The amount of liquid carbon dioxide present between the mouths **15, 15'** of the nozzles **11, 11'** and the balls **6, 6'** when the valves are closed has been found to be insufficient to interfere with the normal operation of the nozzles in producing snow. However, it is desirable to keep the volume between the nozzles **11, 11'** and the ball to a minimum, and so the

nozzle mouths **15, 15'** may be brought closer to the balls **6, 6'** than shown in the drawings.

We claim:

1. An apparatus for the production of carbon dioxide snow which comprises:

a. a rotary ball control valve comprising

1. a seat,

2. a rotatable ball fitted into said seat, said ball having a through passage therein, and

3. a duct having substantially the same diameter as said through passage and being axially aligned with said through passage when said control valve is in an on position, and

b. a nozzle having a bore terminating in an outwardly expanding mouth, the adjacent end of which is connected upstream of said control valve.

2. The apparatus as in claim **1** wherein said duct has substantially the same diameter as the adjacent end of said mouth.

3. The apparatus as in claim **2** wherein said duct has a counterbore into which said nozzle is directly secured.

4. The apparatus as in claim **1** wherein an expansion head is secured to the downstream end of said duct.

5. The apparatus as in claim **4** wherein said expansion head has a tubular spigot secured in a counterbore in the downstream end of said duct.

6. The apparatus as in claim **1** wherein an input line is connected to said nozzle for supplying liquid carbon dioxide thereto and wherein a shut-down valve is inserted in said input line.

7. The apparatus as in claim **1** wherein said control valve is operated by means of an actuator.

8. The apparatus as in claim **7** wherein a plurality of nozzle and valve combinations are controlled from a single actuator.

9. The apparatus as in claim **1** wherein said nozzle comprises a hollow housing member having a central bore terminating is said outwardly expanding mouth and a spindle centrally supported within said bore and terminating in an expanding head defining an annular passage with said bore.

10. The apparatus as in claim **9** wherein said spindle is movable axially relative to said housing to enable control of the cross-sectional area of said annular passage.

* * * * *