United States Patent [19]

Tung

[11] **Patent Number: Des. 291,838**

[45] **Date of Patent: ** Sep. 8, 1987**

[54] **RECHARGEABLE FLASHLIGHT**

[75] Inventor: **Tse T. Tung,** New Territories, Hong Kong

[73] Assignee: **Motor Electric Manufacturing Co., Ltd.,** Kwai Chung, Hong Kong

[**] Term: **14 Years**

[21] Appl. No.: **721,065**

[22] Filed: **Apr. 8, 1985**

[30] **Foreign Application Priority Data**

Dec. 4, 1984 [GB] United Kingdom 1023697

[52] **U.S. Cl.** **D26/48**

[58] **Field of Search** D26/37-50; 362/157, 158, 183-191, 194-205

[56] **References Cited**

U.S. PATENT DOCUMENTS

D. 256,278	8/1980	Wong et al.	D26/48
D. 280,936	10/1985	Dinsmore et al.	D26/48
D. 283,254	4/1986	Fenne	D26/48
3,252,733	5/1966	Moore et al.	D26/48 X

Primary Examiner—Susan J. Lucas

Attorney, Agent, or Firm—Fulwider, Patton, Rieber, Lee & Utecht

[57] **CLAIM**

The ornamental design for a rechargeable flashlight, substantially as shown and described.

DESCRIPTION

FIG. **1** is a top, front and side perspective view of a rechargeable flashlight showing my new design;

FIG. **2** is a top, rear and opposite side perspective view thereof;

FIG. **3** is a bottom, rear and side perspective view thereof;

FIG. **4** is a bottom, rear and opposite side perspective view thereof in condition for charging.

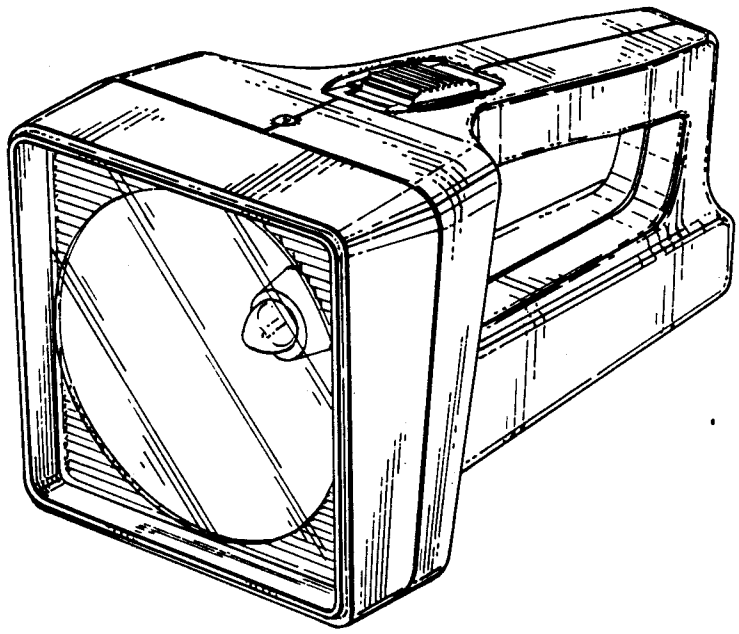

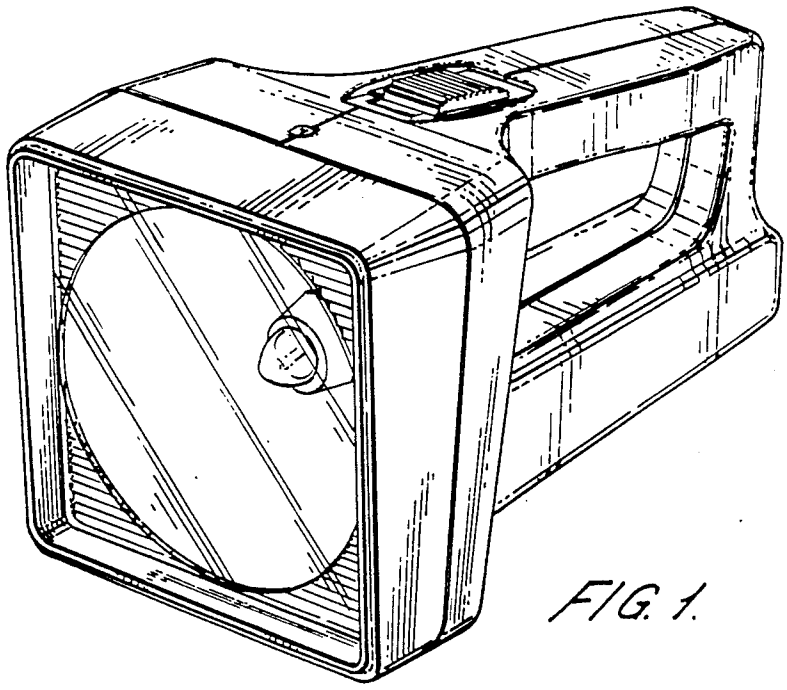

FIG. 1.

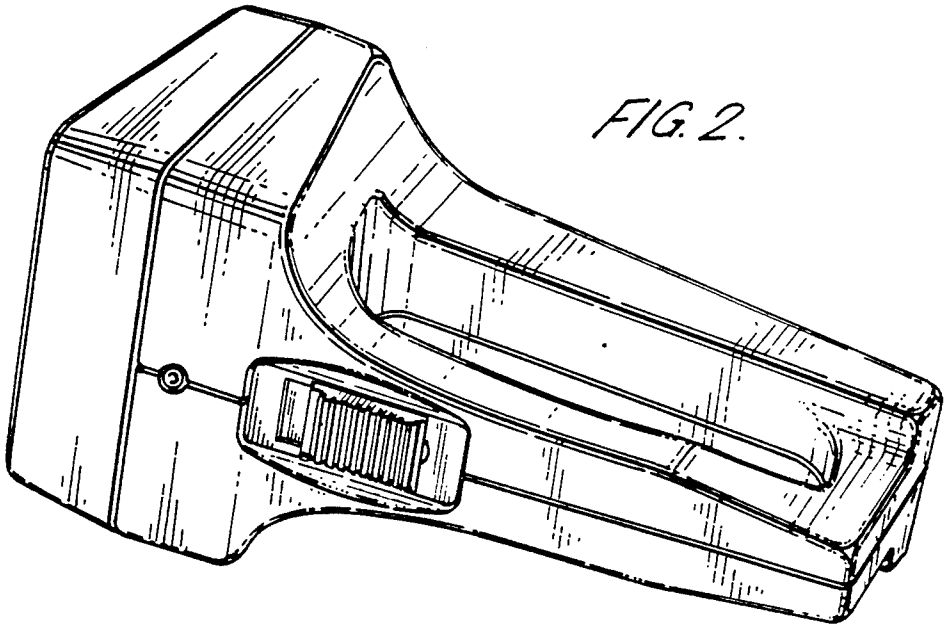

FIG. 2.

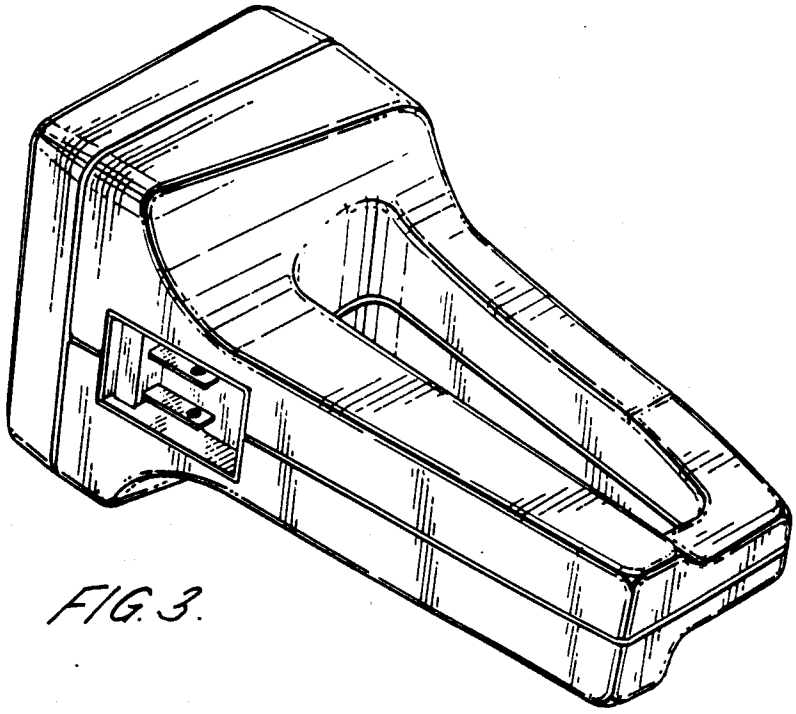

FIG. 3.

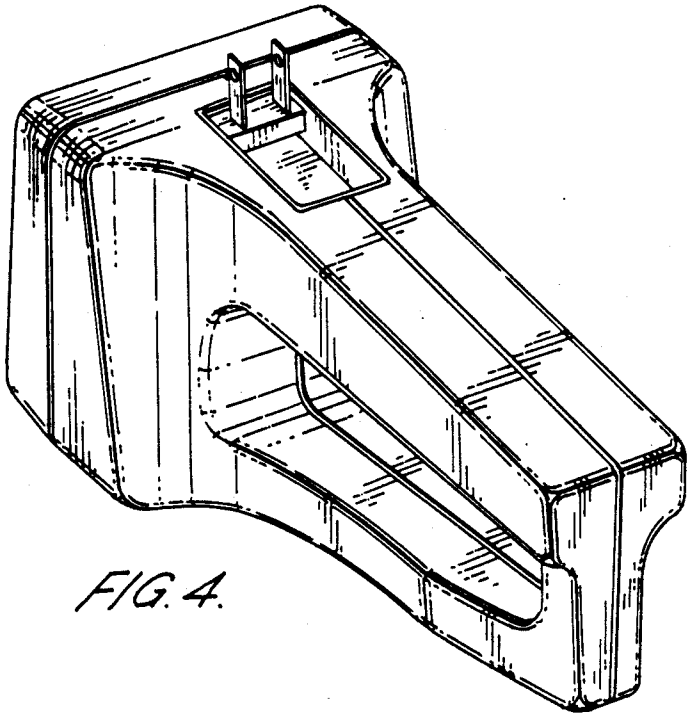

FIG. 4.