Dec. 24, 1963 W. F. CLOUTIER 3,115,213

PORTABLE SEAT

Filed May 1, 1961

FIG.2.

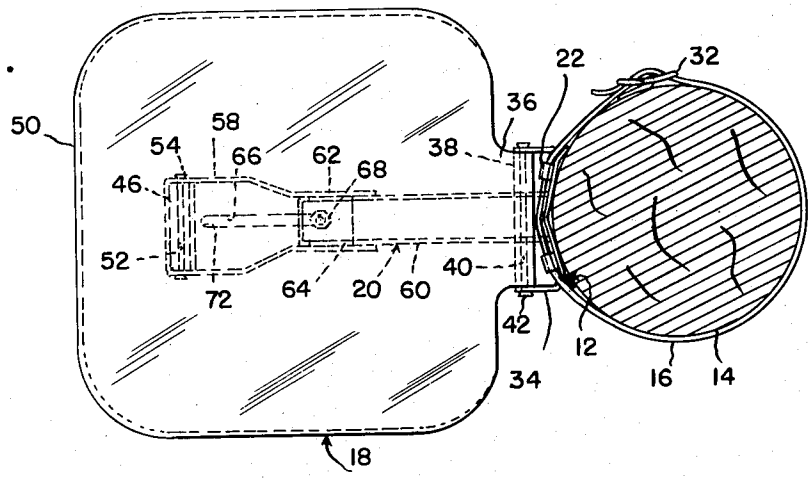

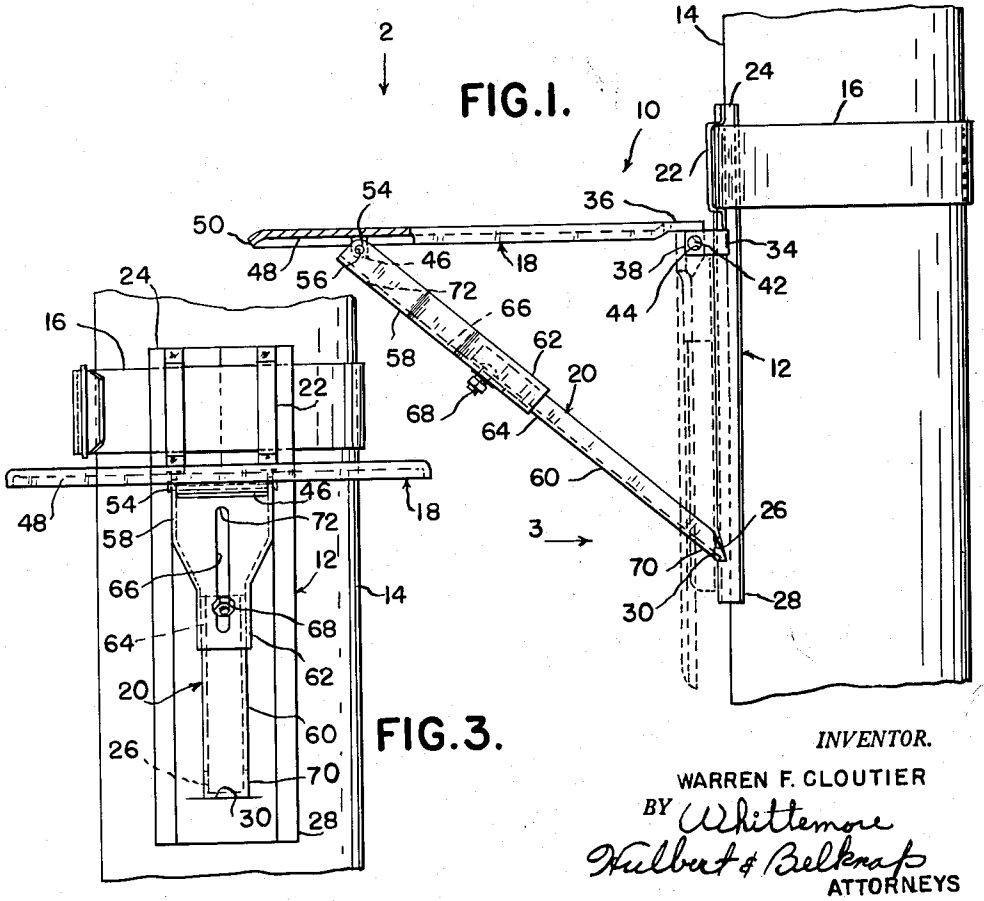

FIG.1.

FIG.3.

INVENTOR.

WARREN F. CLOUTIER

BY Whittemore Hulbert & Belknap

ATTORNEYS

United States Patent Office 3,115,213 Patented Dec. 24, 1963

3,115,213

PORTABLE SEAT

Warren F. Cloutier, 9538 Bonnie Brier, Drayton Plains, Mich.

Filed May 1, 1961, Ser. No. 106,589
1 Claim. (Cl. 182—187)

The invention relates to portable seat assemblies and refers more specifically to a collapsible seat assembly for use by hunters, campers and the like which seat assembly is adapted to be conveniently transported and readily assembled in conjunction with a vertically extending support.

Finding convenient comfortable seating in the woods is a particular problem for hunters, campers and the like. This is especially true after a rain or snow when convenient stumps and logs are wet or cold.

Prior attempts have been made to provide acceptable portable seat assemblies for use in wooded locations. The previous attempts have however been unsuccessful in that the seat assemblies provided were either large and awkward to transport or were not capable of being quickly and efficiently assembled to provide a comfortable seat which was sufficiently rugged and economical.

It is therefore one of the objects of the present invention to provide an improved portable seat assembly.

Another object is to provide a seat assembly adapted to be attached to a tree or other vertically extending support which may be collapsed into a relatively compact package for easy transportation.

Another object is to provide a portable seat assembly including a body member adapted to be secured to the trunk of a tree or a similar vertically extending support, a seat member pivotally secured to the body member adjacent the upper end thereof and a knee brace extending between the seat and body members pivotally secured to one of the members and releasably wedged against the other member to limit pivoting of the members in one direction.

Another object is to provide a portable seat assembly as set forth above wherein the knee brace is adjustable in length to permit varying of the angle between the body and seat members whereby a horizontal seat may be provided with the body member secured to an inclined support.

Another object is to provide a portable seat assembly which is simple in construction, economical to manufacture and efficient in use.

Other objects and features of the invention will become apparent as the description proceeds, especially when taken in conjunction with the accompanying drawing, illustrating a preferred embodiment of the invention, wherein:

FIGURE 1 is an elevation view of a portable seat assembly constructed in accordance with the invention secured to a vertical support in open position so that a seat is provided thereby and illustrating the collapsed position thereof in dashed lines.

FIGURE 2 is a plan view of the portable seat assembly illustrated in FIGURE 1 taken in the direction of arrow 2 in FIGURE 1.

FIGURE 3 is a front elevation of the portable seat assembly illustrated in FIGURE 1 taken in the direction of arrow 3 in FIGURE 1.

With particular reference to the figures of the drawing one embodiment of the present invention will now be disclosed.

As illustrated in FIGURE 1 the portable seat assembly 10 comprises a body member 12 adapted to be secured to a vertically extending support 14 by belt 16, a seat member 18 pivoted to the body 12 and the adjustable brace 20 extending therebetween. In use the

portable seat assembly 10 may be collapsed as illustrated in dashed lines in FIGURE 1 so that it may be conveniently transported. Alternatively the seat assembly 10 may be opened in the position illustrated in full lines in FIGURE 1 to provide convenient comfortable seating for hunters, campers and the like.

More specifically the body 12 is an elongated rectangular plate which as illustrated may be shaped to conform to the general radius of curvature of a circular member, such as a trunk of a tree or other vertically extending support might present. Brackets 22 are secured to the body 12 at the upper end 24 thereof by convenient means such as welding. Notch 26 is provided in the lower end 28 of the body 12 and forms abutment 30 against which the adjustable knee brace 20 is rested with the seat assembly 10 in the open position, as shown in FIGURE 1.

Belt 16 is passed through the brackets 22 and around support 14 as shown best in FIGURE 2. Adjustable buckle 32 is provided on belt 16 for securing the body 12 to the post 14. Belt 16 may be of any convenient material, such as fabric web or leather.

A further U-shaped bracket 34 is also secured to the body 12 adjacent the upper end 24 thereof. The bracket 34 is provided to pivotally support the seat member 18.

Seat member 18 is formed as illustrated in the figures and is particularly produced with a mounting block 38 secured to the mounting tab 36 which has a passage 40 extending therethrough. The seat member 18 is pivotally supported from bracket 34 by means of a pivot pin 42 extending through the passage 40 and aligned openings 44 in the bracket 34.

A second mounting block 46 is secured to the bottom 48 of the seat member 18 adjacent the front edge 50 thereof having a passage 52 extending therethrough. The adjustable knee brace 20 is pivotally secured to the mounting block 46 by means of a second pivot pin 54 extending therethrough and through aligned openings 56 in the link 58 of knee brace 20.

Adjustable knee brace 20 comprises the generally U-shaped links 58 and 60. The link 58 is reduced in width at the end 62 as illustrated best in FIGURE 3 and slidably receives the end 64 of the link 60 for axial movement relative thereto. An elongated slot 66 is provided in the link 58 which is cooperable with a bolt 68 secured to the link 60 to permit relative axial adjustment of the links 58 and 60 and to lock the links in selected relative axial positions. End 70 of the link 60 is bevelled to fit within the notch 26 with the seat assembly 10 in the open position as illustrated in FIGURE 1.

The portable seat assembly 10 may be constructed of convenient material such as metals or plastics or a combination thereof. Aluminum is a preferred material due to its high strength to weight characteristics.

In use the portable seat assembly 10 may be conveniently folded into the position illustrated in dashed lines in FIGURE 1 by loosening the bolt 68 and axially sliding the link 60 of knee brace 20 into the link 58 thereof until bolt 68 rests against the end 72 of the slot 66, pivoting the knee brace 20 in this condition up against the bottom 48 of the seat member 18 and pivoting the seat member 18 and knee brace about the pivot pin 42 until the knee brace 20 rests against the body 12.

When it is desired to use the portable seat assembly 10, the body 12 is positioned on a tree or similar vertically extending support 14 by means of the belt 32. The seat 18 is pivoted to the desired seating angle determined by the inclination of the support 14 and the preference of the user. The knee brace 20 is then pivoted into the position illustrated in FIGURE 1 and the link 60 is withdrawn from the link 58 to provide a knee brace 20 of

proper length for the seating angle desired. Bolt 68 is tightened and end 70 of the knee brace 20 is then positioned in the recess 28. The portable seat assembly 10 is then ready for use.

Thus it will be seen that there is provided in accordance with the invention a portable seat assembly which is compact when collapsed so that it is convenient to transport and which may be readily opened for use. Further the portable seat herein disclosed is adjustable to suit the preference of a particular user and for use with supports having different inclinations. Also the portable seat assembly of the invention as disclosed is rugged and reliable as is necessary with devices for use as camping or hunting equipment.

Further while one embodiment of the invention has been disclosed herein it will be understood that modifications thereof are contemplated. It is the intention to include all such modifications as suggest themselves from the above disclosure within the scope of the invention.

The drawings and the foregoing specification constitute a description of the improved portable seat assembly in such full, clear, concise and exact terms as to enable any person skilled in the art to practice the invention, the scope of which is indicated by the appended claim.

What I claim as my invention is:

A portable seat for use by campers, hunters or the like in conjunction with a vertically extending support comprising an elongated body member contoured transversely to correspond to the contour of the vertically extending support and having a notch therein adjacent the bottom thereof, U-shaped members secured to the top of the body member providing slots for securing a belt to the body member adjacent the top thereof, a belt threaded through the slots for removably securing the body member to the vertically extending support, a bracket rigidly secured to the body member at the top thereof below the U-shaped members including end portions extending substantially perpendicularly from the body member in the same direction, a seat member of usual dimension positioned adjacent the body member including an elongated cylindrical portion extending between the end portions of the bracket, elongated pivot means extending through the cylindrical portion of the seat member mounted at the ends in the end portions of the bracket for pivotally supporting the seat member from the body member and providing lateral stability for the seat member, an adjustable knee brace having a relatively wide channel shaped end portion pivotally secured to the seat member at a point remote from the cylindrical portion of the seat member and a relatively narrow channel shaped end portion telescopically received in the relatively wide end portion and having an end received in the notch in the body member in end abutment therewith.

References Cited in the file of this patent

UNITED STATES PATENTS

60,659	Adams	Jan. 1, 1867
1,127,369	Nash	Feb. 2, 1915
1,542,548	Gordon	June 16, 1925
1,571,753	Christian	Feb. 2, 1926
2,711,783	Prill	June 28, 1955
2,833,608	Tobias	May 6, 1958
2,843,436	Franks	July 15, 1958

FOREIGN PATENTS

926,917	France	Apr. 28, 1946
119,812	Sweden	Oct. 7, 1947
1,079,975	France	May 26, 1954