(12) INTERNATIONAL APPLICATION PUBLISHED UNDER THE PATENT COOPERATION TREATY (PCT)

(19) World Intellectual Property Organization
International Bureau

(43) International Publication Date
3 October 2013 (03.10.2013)

WIPO | PCT

(10) International Publication Number
WO 2013/144890 A2

(51) International Patent Classification: *B01D 53/62* (2006.01)

(21) International Application Number: PCT/IB2013/052475

(22) International Filing Date: 27 March 2013 (27.03.2013)

(25) Filing Language: English

(26) Publication Language: English

(30) Priority Data:
61/617,720 30 March 2012 (30.03.2012) US
13/834,718 15 March 2013 (15.03.2013) US

(71) Applicant: **ALSTOM TECHNOLOGY LTD** [CH/CH]; Brown Boveri Strasse 7, CH-5400 Baden (CH).

(72) Inventors: **VITSE, Frederic**; 9137 Fairhaven Place, Knoxville, Tennessee 37921 (US). **VERSTEEG, Geert**; Drienerbrakenweg 18, NL-7522PD Enschede (NL). **HIWALE, Rameshwar S.**; 8215 Carolina Way, Apt. 1238, Knoxville, Tennessee 37923 (US).

(81) Designated States *(unless otherwise indicated, for every kind of national protection available)*: AE, AG, AL, AM, AO, AT, AU, AZ, BA, BB, BG, BH, BN, BR, BW, BY, BZ, CA, CH, CL, CN, CO, CR, CU, CZ, DE, DK, DM, DO, DZ, EC, EE, EG, ES, FI, GB, GD, GE, GH, GM, GT, HN, HR, HU, ID, IL, IN, IS, JP, KE, KG, KM, KN, KP, KR, KZ, LA, LC, LK, LR, LS, LT, LU, LY, MA, MD, ME, MG, MK, MN, MW, MX, MY, MZ, NA, NG, NI, NO, NZ, OM, PA, PE, PG, PH, PL, PT, QA, RO, RS, RU, RW, SC, SD, SE, SG, SK, SL, SM, ST, SV, SY, TH, TJ, TM, TN, TR, TT, TZ, UA, UG, US, UZ, VC, VN, ZA, ZM, ZW.

(84) Designated States *(unless otherwise indicated, for every kind of regional protection available)*: ARIPO (BW, GH, GM, KE, LR, LS, MW, MZ, NA, RW, SD, SL, SZ, TZ, UG, ZM, ZW), Eurasian (AM, AZ, BY, KG, KZ, RU, TJ, TM), European (AL, AT, BE, BG, CH, CY, CZ, DE, DK, EE, ES, FI, FR, GB, GR, HR, HU, IE, IS, IT, LT, LU, LV, MC, MK, MT, NL, NO, PL, PT, RO, RS, SE, SI, SK, SM, TR), OAPI (BF, BJ, CF, CG, CI, CM, GA, GN, GQ, GW, ML, MR, NE, SN, TD, TG).

Declarations under Rule 4.17:

— *as to applicant's entitlement to apply for and be granted a patent (Rule 4.17(ii))*

— *as to the applicant's entitlement to claim the priority of the earlier application (Rule 4.17(iii))*

Published:

— *without international search report and to be republished upon receipt of that report (Rule 48.2(g))*

(54) Title: METHOD AND SYSTEM FOR CARBON DIOXIDE REMOVAL

FIG. 1

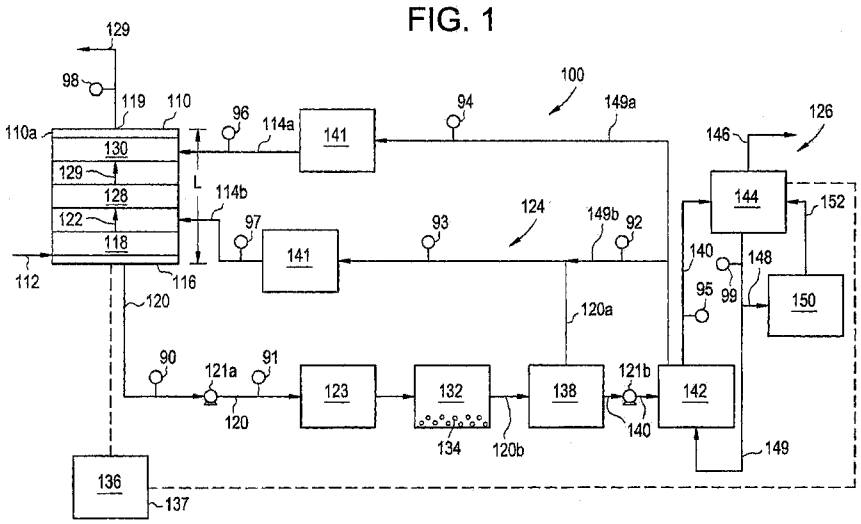

(57) Abstract: A system and a method is provided for removing carbon dioxide from a gas stream. One aspect of the method includes introducing a carbon dioxide-containing gas stream to an absorber. The gas stream is contacted with an ammonia-containing solvent for absorbing, with the ammonia-containing solvent, the carbon dioxide from the gas stream, thereby removing the carbon dioxide from the gas stream.

WO 2013/144890 A2

METHOD AND SYSTEM FOR CARBON DIOXIDE REMOVAL

TECHNICAL FIELD

[0001] The present disclosure is generally directed to the removal of carbon dioxide from a gas stream. More particularly, the present disclosure is directed to a system and method for precipitating ammonium salts as a means to separate a carbon dioxide rich phase from a carbon dioxide semi-lean phase and thus reduce the energy requirements during regeneration.

BACKGROUND

[0002] Combustion of fossil fuels typically produces an exhaust gas stream (commonly referred to as a "flue gas stream") that contains contaminants, such as carbon dioxide (CO_2), sulfur oxides (SOx), nitrogen oxides (NOx), mercury, and carbon containing species, as well as particulate matter such as dust or fly ash. To meet requirements established under certain laws and protocols, plants that burn fossil fuels subject the resultant flue gas stream to various processes and systems to reduce or eliminate the amount of contaminants present in the flue gas stream prior to releasing the flue gas stream to the atmosphere.

[0003] In one example, carbon dioxide is removed from a gas stream by introducing the gas stream to an absorber column ("absorber"). In one embodiment, the gas stream contacts a solvent in a counter-current flow within the absorber. Contact between the solvent and the gas stream allows the solvent to absorb and thus remove the CO_2 from the gas stream. The gas stream that is substantially free of the CO_2 is typically sent to an exhaust stack while the CO_2 rich solvent is processed in a regenerator to remove the CO_2. The solvent from the regenerator is then cycled back to the absorber for further use.

[0004] When using reactive solvents, such as ammonia, for CO_2 removal, the solution reactions between the solvent(s) and the carbon dioxide may form a precipitate such as, for example, ammonium salts. When utilizing a chilled ammonia absorption process (often referred to as "CAP"), the process operates at a low temperature (typically below 20°C) and high CO_2 loadings to minimize ammonia volatility. High ammonia molarity and high recirculation rate (of the ammonia) around the absorber may be needed to achieve the desired CO_2 removal from the flue gas stream.

[0005] In addition to achieving the desired amount of CO_2 removal from the flue gas stream, it is also desirable to reduce ammonia loss. Reduction of ammonia loss involves low

temperatures and low free ammonia molarity. Also, an ammonia solvent has the tendency to precipitate ammonium bicarbonate at high free ammonia molarity, low temperature, and high CO_2 loading, thus limiting the cyclic capacity of the solvent between the absorber and the regenerator. The consequence of this is that higher circulation rates are required between the absorber and regenerator to achieve the desired CO_2 capture rates.

SUMMARY

[0006] According to aspects illustrated herein, there is provided a method for removing carbon dioxide from a gas comprising introducing a carbon dioxide-containing gas stream to an absorber; contacting the gas stream with an ammonia-containing solvent, the ammonia-containing solvent having a molarity between about 0.5 molar and about 13 molar; and absorbing the carbon dioxide from the gas stream with the ammonia-containing solvent, thereby removing the carbon dioxide from the gas stream and forming a CO_2-rich stream.

[0007] According to further aspects illustrated herein, there is provided a method for removing carbon dioxide from a carbon dioxide-containing gas stream comprising introducing a carbon dioxide-containing gas stream to an absorber having a temperature of about 45°C or less; contacting the carbon dioxide-containing gas stream with an ammonia-containing solvent having a molarity between about 0.5 molar and about 13 molar; absorbing carbon dioxide from the gas stream; and forming a precipitate between the carbon dioxide and the ammonia-containing solvent.

[0008] In yet a further aspect illustrated herein, there is provided a system for removing carbon dioxide from a gas stream comprising an absorber configured to receive a carbon dioxide-containing gas stream and an ammonia-containing solvent, the ammonia-containing solvent having a molarity between about 0.5 molar and about 13 molar, the carbon dioxide-containing gas stream and the ammonia-containing solvent being contacted to remove carbon dioxide from the gas and form a carbon dioxide-rich stream; and a regenerator fluidly coupled to the absorber, wherein the regenerator is configured to receive at least a portion of the carbon dioxide-rich stream and to remove carbon dioxide from the carbon dioxide-rich stream to form a regenerated solvent to be introduced to the absorber for further absorption and removal of carbon dioxide.

[0009] The above described and other features are exemplified by the following figures and in the detailed description.

BRIEF DESCRIPTION OF THE DRAWINGS

[0010] Referring now to the figures which are exemplary embodiments and wherein like elements are numbered alike:

[0011] FIG. 1 is a schematic depiction of a system for removal of carbon dioxide from a gas stream;

[0012] FIG. 2 is a graph illustrating carbon dioxide capture rate in a system according to an embodiment described herein;

[0013] FIG. 3 is a graph illustrating reboiler temperature and lean loading.

Detailed Description

[0014] FIG. 1 illustrates a system 100 for removal of carbon dioxide (CO_2) from a gas stream. The system 100 includes a columnar absorber 110, wherein a CO_2-containing gas stream 112, such as, for example, a flue gas stream, is introduced and contacted with a solvent, such as CO_2-lean stream 114a and/or CO_2 semi-lean stream 114b. The CO_2-containing gas stream 112 may be contacted with the solvent 114a, 114b in a counter-current manner; however, it is contemplated that the CO_2-containing gas stream 112 may be contacted with the solvent 114a, 114b in any manner or direction that is desired in the system 100.

[0015] The CO_2-lean stream 114a and/or CO_2 semi-lean stream 114b are both ammonia-containing solvents that absorb CO_2 from the gas stream 112. The solvent 114a, 114b includes a low molarity ammonia having a molarity between about 0.5 molar to about 13 molar. In one embodiment, the molarity of the ammonia-containing solvent 114a, 114b is between about 0.5 molar to about 6 molar in the absorber 110.

[0016] Using a solvent having low ammonia molarity reduces ammonia loss and the saturation concentration for CO_2 is increased and therefore, the ammonia-containing solvent can absorb more moles of CO_2 per mole of ammonia as compared to solvents having a higher molarity. In one embodiment, the ammonia-containing solvent 114a comprises a CO_2-lean stream and the ammonia-containing solvent 114b comprises a CO_2 semi-lean stream. As further described below with respect to absorption of CO_2 from the flue gas stream and regeneration of the ammonia-containing solvent, the CO_2-lean stream 114a comprises a regenerated solvent 149 that is cycled back to the absorber 110 after exiting a regenerator 144 wherein the regenerated solvent 149 is stripped of carbon dioxide. As further described below with reference to FIG. 3, the regenerated solvent 149, and thus the CO_2-lean stream 114a, exhibits lean CO_2 loading ranging from 0.00 to 0.45 moles of CO_2 / moles of ammonia. As further described below with reference to passing the flue gas stream to a precipitating

means 132 and subsequently to a separation device 138, the CO_2 semi-lean stream 114b comprises a stream 120a that is extracted from the separation device 138 and is cycled back to the absorber 110 without passing through the regenerator 144.

[0017] In one embodiment, the ammonia-containing solvent, CO_2-lean stream 114a and/or CO_2 semi-lean stream 114b, also includes a catalyst in the form of an enzyme. In one embodiment, the enzyme is a metalloenzyme, such as, for example, carbonic anhydrase. In another embodiment, the catalyst is added to the ammonia-containing solvent, CO_2-lean stream 114a and/or CO_2 semi-lean stream 114b, to increase the total loading of the solution and/or favor the formation of a bicarbonate salt precipitate. In one embodiment, the absorber 110 is operated at a temperature of about 45°C or less. In another embodiment, the absorber 110 is operated in accordance with CAP, as described above, such that the temperature of the absorber 110 is about 20°C. It is contemplated that a top section 110a of the absorber 110 could be operated at a temperature of about 10°C or less.

[0018] As shown in FIG. 1, the gas stream 112 enters a bottom portion 116 of the absorber 110 and travels up a length L of the absorber 110 where it is contacted with the CO_2 semi-lean stream 114b in a first absorption section 118. The contact between the CO_2 semi-lean stream 114b and the gas stream 112 forms a stream 120 that is rich in CO_2 and ammonia (NH_3), and a stream 122 containing reduced CO_2. The stream 120 is removed from the absorber 110 and a portion 120a of the stream 120 is recycled to the absorber 110 via a feedback loop 124 and introduced to the absorber 110 as the CO_2 semi-lean stream 114b, while the remaining portion of the stream 120 is provided as CO_2-enriched phase stream 140 to a regeneration system 126.

[0019] Meanwhile, in the absorber 110, the reduced CO_2 containing gas stream 122 continues to a second absorption section 128, where the reduced CO_2 containing gas stream 122 is contacted with CO_2-lean stream 114a. In the second absorption section 128, more CO_2 is absorbed from the gas stream to form a stream 129 that is substantially reduced in carbon dioxide content. In other embodiments, it is contemplated that the absorber 110 may have more than two absorption sections as illustrated. In yet another embodiment, the sections of the absorber 110 comprise more than one separate column or unit.

[0020] The stream 129 may be processed through one or more wash sections 130 in the absorber 110 prior to being emitted from the absorber 110 at an outlet 119. The molarity of ammonia present in the wash section 130 is between about 0 molar to about 3 molar. The stream 129 having a substantially reduced carbon dioxide content may be subjected to further processing in another portion of the system 100 or may be released to an environment.

[0021] The stream 120 is rich in CO_2 and NH_3 as a result of the reaction between the CO_2 in the gas stream 112 and the CO_2-lean stream 114a and/or CO_2 semi-lean stream 114b in the absorber 110. In one embodiment, prior to being provided to the regeneration system 126, a first pressure of the stream 120 is elevated via a first pump 121A and subsequently the stream 120, having an elevated pressure or a second pressure, is cooled via a chiller 123 and provided to a precipitating means 132. In one embodiment, the precipitating means 132 is a crystallizer, which forms a precipitate 134. The precipitate 134 may be, for example, an ammonium salt. This speciation results in an enthalpy of regeneration that is about 15% lower according to equation 1 and 2:

$$CO_2(g) + NH_3(aq) + H_20 = NH_4HCO_3(aq) \qquad \Delta H = -64kJ/mol\ CO2 \qquad (1)$$

$$CO_2(g) + 2NH_3 = NH_2CO_2\ NH_4\ (aq) \qquad \Delta H = -74kJ/mol\ CO2 \qquad (2)$$

[0022] As noted, the precipitate 134 may be, for example, an ammonium salt, and more particularly ammonium bicarbonate, carbamate and/or carbonate. The speciation of the three ammonium salts, bicarbonate, ammonium carbamate and carbonate, in an ammonia solution depends on several variables. It has previously been demonstrated that in an ammonia solution with constant molarity, such as, for example, 1.34mol/L, the speciation of bicarbonate will increase as the total of carbon content of the solution increases. A low molarity, highly-loaded ammonia solution favors the formation of ammonium bicarbonates over carbamates. It has further been demonstrated that at constant temperature, bicarbonate speciation decreases as a percent of total carbon anions in solution as ammonia molarity increases. Thus, at low ammonia molarity, a larger proportion of the ammonium bicarbonate salt precipitate 134 exists in the solution. Additionally, at low ammonia molarity, the desired capture rate of CO_2 can be achieved with appropriate sizing of the absorber 110.

[0023] FIG. 2 illustrates that CO_2 capture rates of 85% or above are achieved having an absorber length of 30 meters, shown generally by a first plot 410, when the absorber 110 is run at a temperature of about 20°C. A 90% capture rate of CO_2 may be achieved upon the regulation of the temperature of the absorber 110 via a control system 136 in communication with the absorber 110 and the regeneration system 126 (FIG. 1). In one embodiment and as further shown in FIG. 1, the control system 136 comprises a controller 137 in communication with a plurality of devices 90-99 for measuring and selectively adjusting a plurality of operating parameters such as, for example, temperature, pressure, volumetric flow rate, molarity and mass concentrations of each stream of system 100. The devices 90-99 include,

for example, sensors or other measurement devices, flow control valves, pumps and other flow control means. Such devices 90-99 are configured to transmit to, and receive from, the controller 137 one or more signals for operation of such devices, and the controller 137 is configured to receive and transmit multiple signals simultaneously, at elevated temperature ranges, and having a resistance to vibration, impact and electrical noise. While the control apparatus 136 is shown and described as comprising a controller 137, the present invention is not limited in this regard as the control apparatus 136 may comprise, for example, a Programmable Logic Controller ("PLC"), a distributed control systems ("DCS"), a computer or any type of microprocessor or like programmable control device having software installed therein, a server connected to one or more programmable devices, or any like controller without departing from the broader aspects of the invention. As used herein, the term "computer" encompasses desktops, laptops, tablets, handheld mobile devices, mobile phones and the like.

[0024] Referring to FIG. 2, the first plot 410 and a second plot 411 display the CO_2 capture rate in ammonia at 1.5M as a function of a length "L" of the absorber 110. The X axis 400 shows the absorber height L in meters. The first Y axis 420 shows % CO_2 capture. A second Y axis 440 shows CO_2 concentration at the outlet 119. The graph of FIG. 2 illustrates the following data points for plots 410 and 411, as summarized in Tables 1A and 1B below. Table 1A provides the CO_2 Capture rate as a function of packing height; and Table 1B provides the CO_2 outlet concentration as a function of packing height. The first plot 410 shows CO_2 capture approaching 80% at approximately 20m and approaching 90% at approximately 50m. Conversely, a curve 411 shows the concentration of CO_2 at the outlet of the absorber 110, which approaches 0.01 molar at approximately 40m.

% CO_2 captured	Absorber length L in meters
50%	2m
60%	8m
72%	10m
80%	15m
88%	40m
90%	78m
90%	100m

Table 1A

CO_2 Outlet Concentration - Molar	Absorber length L in meters
0.07	5m
0.10	10m
0.11	20m
0.125	40m
0.125	80m
0.125	100m

Table 1B

[0025] Turning back to FIG. 1, after the precipitate 134 is formed, a stream 120b containing the precipitate 134 is provided to a separation device 138. The separation device 138 may be any type or kind of device that is capable of separating solids (*e.g.*, precipitate) from liquid (*e.g.* stream 120b), including but not limited to the separation device 138 being a cyclone.

[0026] The separation device 138 separates the portion 120a from the stream 120b containing the precipitate 134. The portion 120a of the stream 120 is recycled to the absorber 110 via the feedback loop 124. The separation device 138 provides a CO_2-enriched phase or stream 140 to the regeneration system 126. In one embodiment, prior to being provided to the regeneration system 126, a first pressure of the stream 140 is elevated via a second pump 121B and subsequently the stream 140, having an elevated pressure or a second pressure, is passed to the regeneration system 126. The CO_2-enriched phase, stream 140, including the precipitate, is provided to the regeneration system 126. In one embodiment as described above, the ammonia-containing solvent, CO_2-lean stream 114a and/or CO_2 semi-lean stream 114b, includes a catalyst in the form of an enzyme. As a result, the stream 120 that is removed from the absorber 110, cooled via the chiller 123, provided to the precipitating means 132, and subsequently provided to the separation device 138 as the stream 120b containing the precipitate 134 correspondingly includes the catalyst. The separation device 138 separates the portion 120a, including the catalyst, from the stream 120b containing the precipitate 134, and the portion 120a, including the catalyst, is recycled to the absorber 110 via the feedback loop 124.

[0027] As shown in FIG. 1, the CO_2-enriched phase stream 140 is provided to a heat exchanger 142 prior to being provided to a regenerator 144. In the regenerator 144, the CO_2-enriched phase stream 140 is stripped of carbon dioxide by breaking the chemical bond

between the carbon dioxide and the solvent. The carbon dioxide is removed from the solvent by the introduction of heat to the regenerator 144. A reboiler 150 is provided to further process a regenerated solvent 149 exiting the regenerator 144. In one embodiment, the regenerator 144 is operated at a temperature of about 110°C. In another embodiment, the regenerator 144 operates at less than 100°C. It is contemplated that the temperature of the regenerator 144 and the reboiler 150 may be controlled via the control system 136.

[0028] Very high CO_2 loading is achievable when the ammonia-containing solvent 114a, 114b has a molarity between about 0.5 molar and 6 molar and the precipitate 134 is formed. This results in a high partial pressure of CO_2 in the stream 140, which enables regeneration to be conducted at a temperature as low as 115°C. In FIG. 3, a CO_2 rich loading of 0.8 molar has been reached and for a regeneration pressure of 2 bars, simulation shows that for a 90% CO_2 removal, temperatures as low as 115°C are suitable to regenerate the solvent. As the temperature of the regenerator 144 decreases, it is understood that CO_2 removal will be improved during the regeneration process.

[0029] Referring to FIG. 3, the plot shows the reboiler 150 temperature and lean solution CO_2 loading as a function of regenerator temperature when the ammonia concentration is at 1.5M and the rich loading is 0.8. The X axis 500 shows the pressure in the regenerator 144 ranging from 0 bars to 10 bars. The first Y axis 520 shows the reboiler 150 temperature in °C ranging from 100°C to 140°C. The second Y axis 540 shows lean CO_2 loading in moles of CO_2 / moles of ammonia ranging from 0.00 to 0.45 [mole CO_2/mole NH_3]. The graph of FIG. 3 illustrates the following data points for a third plot 510 and a fourth plot 511, as summarized in Tables 2A and 2B below. Table 2A provides a reboiler temperature as a function of regenerator temperature; and Table 2B provides a lean CO_2 loading as a function of regenerator temperature The third plot 510 illustrates the reboiler 150 temperature increases as pressure increases, wherein at approximately 2 bars, the reboiler 150 temperature is about 114°C and at approximately 10 bars the reboiler 150 temperature is about 134°C. The fourth plot 511 illustrates the lean CO_2 loading increases as pressure increases, wherein at approximately 2 bar, the CO_2 loading is about 0.15 [mole CO_2/mole NH_3] and at approximately 10 bars, the CO_2 loading is about 0.40 [mole CO_2/mole NH_3].

Regenerator pressure (bars)	Reboiler temperature
1.5 bars	102°C
2.5 bars	114°C
4 bars	124°C
6 bars	129°C
9 bars	133°C
10 bars	134°C

Table 2A

Regenerator pressure (bars)	Lean CO_2 loading
1.5 bars	0.13 mole CO_2/mole NH_3
2.5 bars	0.16 mole CO_2/mole NH_3
4 bars	0.23 mole CO_2/mole NH_3
6 bars	0.30 mole CO_2/mole NH_3
9 bars	0.37 mole CO_2/mole NH_3
10 bars	0.40 mole CO_2/mole NH_3

Table 2B

[0030] Referring back to FIG. 1, after being stripped from the solvent, the carbon dioxide is released from the regenerator 144 as a stream of carbon dioxide 146. In one embodiment, the stream of carbon dioxide 146 is sent to another section of the system 100 for further processing, storage or use, while the regenerated solvent 149 leaves the regenerator bottom via line 148. At least a portion of the regenerated solvent is passed to the reboiler 150 via the line 148. While not shown in FIG. 1, it is contemplated that the system 100 may include one or more pumps that facilitate the movement of the regenerated solvent 149 throughout the system.

[0031] In the reboiler 150, the regenerated solvent 149 is boiled to generate vapor 152, which is returned to the regenerator 144 to drive separation of carbon dioxide from the solvent. In addition, reboiling of the regenerated solvent 149 may provide further carbon dioxide removal from the regenerated solvent 149.

[0032] The regenerated solvent 149 is passed to the heat exchanger 142 for heat-exchanging with the CO_2-enriched phase stream140. Heat-exchanging allows for heat transfer between the solutions, resulting in a cooled regenerated solvent 149a and the heated

CO_2-enriched phase stream 140. The regenerated solvent 149a is thereafter cycled to the next round of absorption in the absorber as the CO_2-lean stream 114a. It is contemplated that the regenerated solvent 149a may be cooled via one or more chillers 141 prior to being introduced to the absorber 110. In one embodiment, the regenerated solvent 149a is referred to as a first regenerated solvent 149a; and a second regenerated solvent 149b is extracted from the first regenerated solvent 149a. Thereafter, the second regenerated solvent 149b is cycled together with the portion 120a of the stream 120 to the absorber 110 via the feedback loop 124 as the CO_2 semi-lean stream 114b. In one embodiment, the controller 137 is configured to measure and selectively adjust the flow rate of at least one of the regenerated solvent 149a and the second regenerated solvent 149b to respectively adjust the CO_2-content of CO_2-lean stream 114a and/or the CO_2 semi-lean stream 114b.

[0033] The foregoing system and method provides increased efficiency of carbon dioxide capture and lower ammonia emission. Utilization of a lower molarity ammonia-containing solvent permits increased carbon dioxide loading, which reduces the number of wash sections 130 utilized in the absorber 110. Additionally, the utilization of a lower molarity solution will permit the regenerator 144 to operate at a lower pressure and lower temperature, which may contribute to efficiency and cost savings. These advantages, as well as others, are highlighted in the Examples included below:

EXAMPLES

Example 1: Comparison of Carbon Capture Utilizing Ammonia-Containing Solvents Having Different Molarities

[0034] At low ammonia molarity, a larger proportion of bicarbonate is formed and more of the bicarbonate can be dissolved in the solution. Data from a comparison of two cases having 90% CO_2 capture with high and low molarity ammonia solvent is provided in Table 3 below. The loss in cyclic capacity associated with the lower concentration of ammonia is partially compensated by the higher CO_2 loading as shown in Table 3. In such a case, the ammonia concentration is reduced by a factor of 5.48, yet the circulation rate in the absorber correspondingly increased by a factor of 3.64. The low molarity and relatively higher lean loading of CO_2 led to a reduction of ammonia loss in the absorber by a factor of 6.3.

	Case 1	Case 2	Ratio
NH_3 concentration (%wt)	13.7	2.5	0.18
Circulation rate (kg/hr)	2.20E+06	8.00E+06	3.64
Lean loading (mol/mol)	0.3	0.39	1.30
Rich loading (mol/mol)	0.57	0.78	1.37
Free ammonia (mol/L)	5.6	0.9	0.16

Table 3

Example 2: Precipitation Formation

[0035] At a higher ammonia concentration solution, the high CO_2 loaded solution starts precipitating earlier as compared to lower molarity solution. An Ammonium Bicarbonate Solubility Index ("SI") at different NH_3 Molarity is provided in Table 4 below. The data in Table 4 confirms precipitation can occur at 0.46 loading at 10M solutions at 4.4 °C whereas 0.66 loading is needed for 4M solutions to precipitate at 4.4° C.

Temperature, C	NH_3 Molarity (M)	CO_2 loading	SI
4.4	4	0.66	1
	10	0.46	1

Table 4

Example 3: Ammonia Emissions from an Absorber

[0036] Operating the system 100 at a lower ammonia molarity may reduce ammonia emissions from an absorption section 118, 128 to a wash section 130. In one embodiment, the absorber 110 may have three absorption sections. It has been demonstrated that as lean

solution CO_2 loading increases, for example from about 0.23 to about 0.47, ammonia emissions decrease, for example approximately 35%.

Example 4: Energy Consumption

[0037] The lower molarity ammonia-containing solution does not increase the amount of energy required to regenerate the solution 149 in the regenerator 144, and reduces the energy consumption in the absorber 110 because of the lower ammonia emissions from the absorption section to the wash section.

Example 5: Overall Carbon Dioxide Capture Efficiency

[0038] The carbon dioxide removal efficiency may be reduced when using lower molarity ammonia-containing solvents at the same operating conditions at the same absorber bed height as compared to systems utilizing higher molarity solvents. However, low molarity solvents permit the system to operate at a higher temperature. Operation of the system at a higher temperature may improve kinetics, which in turn increases carbon dioxide capture efficiency. Operation at a higher temperature will also reduce the load needed to cool the absorber 110.

[0039] The various embodiments of the present invention described herein above provide a system and method for precipitating ammonium salts as a means to separate a CO_2-rich phase from a CO_2-semi-lean phase and thus reduce the energy requirements during regeneration. Such a system and method uses lower molarity ammonia (0.5-6 molar) with minimized ammonia losses to the gas overheads (up to an order of magnitude lower) and provides significant cyclic capacity while maintaining adequate adsorption kinetics in the absorber. The process takes advantage of precipitating ammonium salts post absorber and in a controlled manner by cooling the CO_2-rich solvent, therefore separating a CO_2-and-ammonia-rich phase, which is sent to the regenerator for an energy-efficient regeneration. The semi-lean phase is recirculated to the absorber to be enriched again above its low-temperature saturation point. Ammonia plays a dual role of an accelerator of the CO_2 absorption reaction in the liquid phase as well as a precipitating agent for the separation of the CO_2-rich phase from the CO_2-semi-lean phase. Since both ammonia and CO_2 are concentrated in the CO_2-rich phase, their partial pressures are higher and upon heating of the solution, regeneration of CO_2 at higher pressure can take place. Since ammonia is more volatile than water, significant regeneration can take place at relatively lower temperature (100°C or below) and higher pressure. Therefore, the process allows for lower temperature, higher pressure CO_2 regeneration with the ammonia as a main stripping agent. The ammonia loss to the gas phase is proportional to the liquid phase free ammonia (non-reacted ammonia)

concentration. At lower molarity, the saturation concentration for CO_2 is significantly increased and much higher CO_2-rich loading can be reached.

[0040] While the invention has been described with reference to various exemplary embodiments, it will be understood by those skilled in the art that various changes may be made and equivalents may be substituted for elements thereof without departing from the scope of the invention. In addition, many modifications may be made to adapt a particular situation or matter to the teachings of the invention without departing from the essential scope thereof. Therefore, it is intended that the invention not be limited to the particular embodiment disclosed as the best mode contemplated for carrying out this invention, but that the invention will include all embodiments falling within the scope of the appended claims.

WHAT IS CLAIMED IS:

1. A method for removing carbon dioxide from a gas, the method comprising:

introducing a carbon dioxide-containing gas stream to an absorber;

contacting the gas stream with an ammonia-containing solvent, the ammonia-containing solvent having a molarity between about 0.5 molar and about 13 molar; and

absorbing the carbon dioxide from the gas stream with the ammonia-containing solvent, thereby removing the carbon dioxide from the gas stream and forming a CO_2-rich stream.

2. The method for removing carbon dioxide from a gas of claim 1, wherein the ammonia-containing solvent comprises a molarity of about 1.5 molar.

3. The method for removing carbon dioxide from a gas of claim 1, wherein the absorber is operated at a temperature of about 45°C or less.

4. The method for removing carbon dioxide from a gas of claim 3, wherein the absorber is operated at a temperature of about 20°C.

5. The method for removing carbon dioxide from a gas of claim 1, wherein the ammonia-containing solvent further comprises a catalyst.

6. The method for removing carbon dioxide from a gas of claim 1, further comprising removing the CO_2-rich stream from the absorber and forming a precipitate in the CO_2-rich stream.

7. The method for removing carbon dioxide from a gas of claim 6, wherein the precipitate is an ammonium salt.

8. The method for removing carbon dioxide from a gas of claim 6, further comprising:

removing the precipitate from the CO_2-rich stream to form a CO_2-enriched phase and a CO_2 semi-lean stream, the CO_2 semi-lean stream being provided to the absorber and the CO_2-enriched phase being provided to a regeneration system.

9. The method for removing carbon dioxide from a gas of claim 8, further comprising:

providing the CO_2-enriched phase to the regeneration system for separating the carbon dioxide from the ammonia-containing solvent to form a carbon dioxide stream and a regenerated solvent.

10. The method for removing carbon dioxide from a gas of claim 9, further comprising:

providing the regenerated solvent to the absorber as a CO_2 lean stream.

11. A method for removing carbon dioxide from a carbon dioxide containing gas stream, the method comprising:

introducing a carbon dioxide-containing gas stream to an absorber having a temperature of about 45°C;

contacting the carbon dioxide-containing gas stream with an ammonia-containing solvent having a molarity between about 0.5 molar and about 13 molar;

absorbing carbon dioxide from the gas stream; and

forming a precipitate between the carbon dioxide and the ammonia-containing solvent.

12. The method for removing carbon dioxide from a carbon dioxide containing gas stream of claim 11, wherein the ammonia-containing solvent has a molarity of about 1.5 molar.

13. The method for removing carbon dioxide from a carbon dioxide containing gas stream of claim 11, wherein the precipitate is an ammonium salt.

14. The method for removing carbon dioxide from a carbon dioxide containing gas stream of claim 11, further comprising:

removing the precipitate from the CO_2-rich stream to form a CO_2-enriched phase and a CO_2 semi-lean stream, the CO_2 semi-lean stream being provided to the absorber and the CO_2-enriched phase being provided to a regeneration system.

15. The method for removing carbon dioxide from a carbon dioxide containing gas stream of claim 14, further comprising:

providing the CO_2-enriched phase to the regeneration system for separating the carbon dioxide from the ammonia-containing solvent to form a carbon dioxide stream and a regenerated solvent.

16. The method for removing carbon dioxide from a carbon dioxide containing gas stream of claim 15, further comprising:

providing the regenerated solvent to the absorber as a CO_2 lean stream.

17. A system for removing carbon dioxide from a gas stream, the system comprising:

an absorber configured to receive a carbon dioxide-containing gas stream and an ammonia-containing solvent, the ammonia-containing solvent having a molarity between about 0.5 molar and about 13 molar, the carbon dioxide-containing gas stream and the ammonia-containing solvent being contacted to remove carbon dioxide from the gas stream and form a carbon dioxide-rich stream; and

a regenerator fluidly coupled to the absorber, wherein the regenerator is configured to receive at least a portion of the carbon dioxide-rich stream and to remove carbon dioxide from the carbon dioxide-rich stream to form a regenerated solvent to be introduced to the absorber for further absorption and removal of carbon dioxide.

18. The system for removing carbon dioxide from a gas stream of claim 17, wherein the ammonia-containing solvent comprises a molarity of about 1.5 molar.

19. The system for removing carbon dioxide from a gas stream of claim 17, further comprising a precipitation means for forming a precipitate in the carbon dioxide-rich stream prior to providing at least a portion of the carbon dioxide-rich stream to the regenerator.

20. The system for removing carbon dioxide from a gas stream of claim 19, wherein the precipitate is an ammonium salt.

FIG. 1

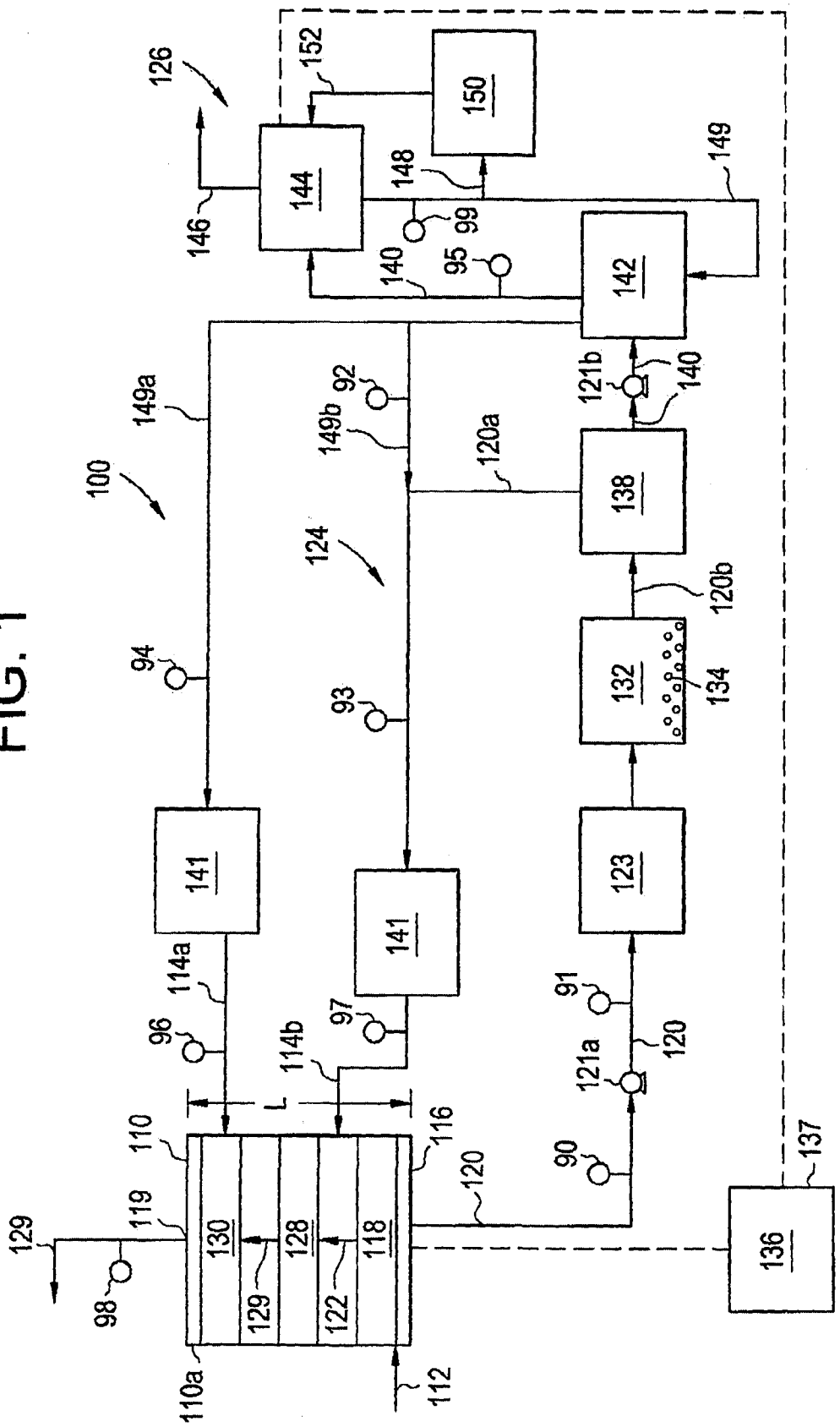
100
110
110a
112
114a
114b
116
118
119
120
120a
120b
121a
121b
122
123
124
126
128
129
130
132
134
136
137
138
140
141
142
144
146
148
149
149a
149b
150
152
90
91
92
93
94
95
96
97
98
99
L

FIG. 2

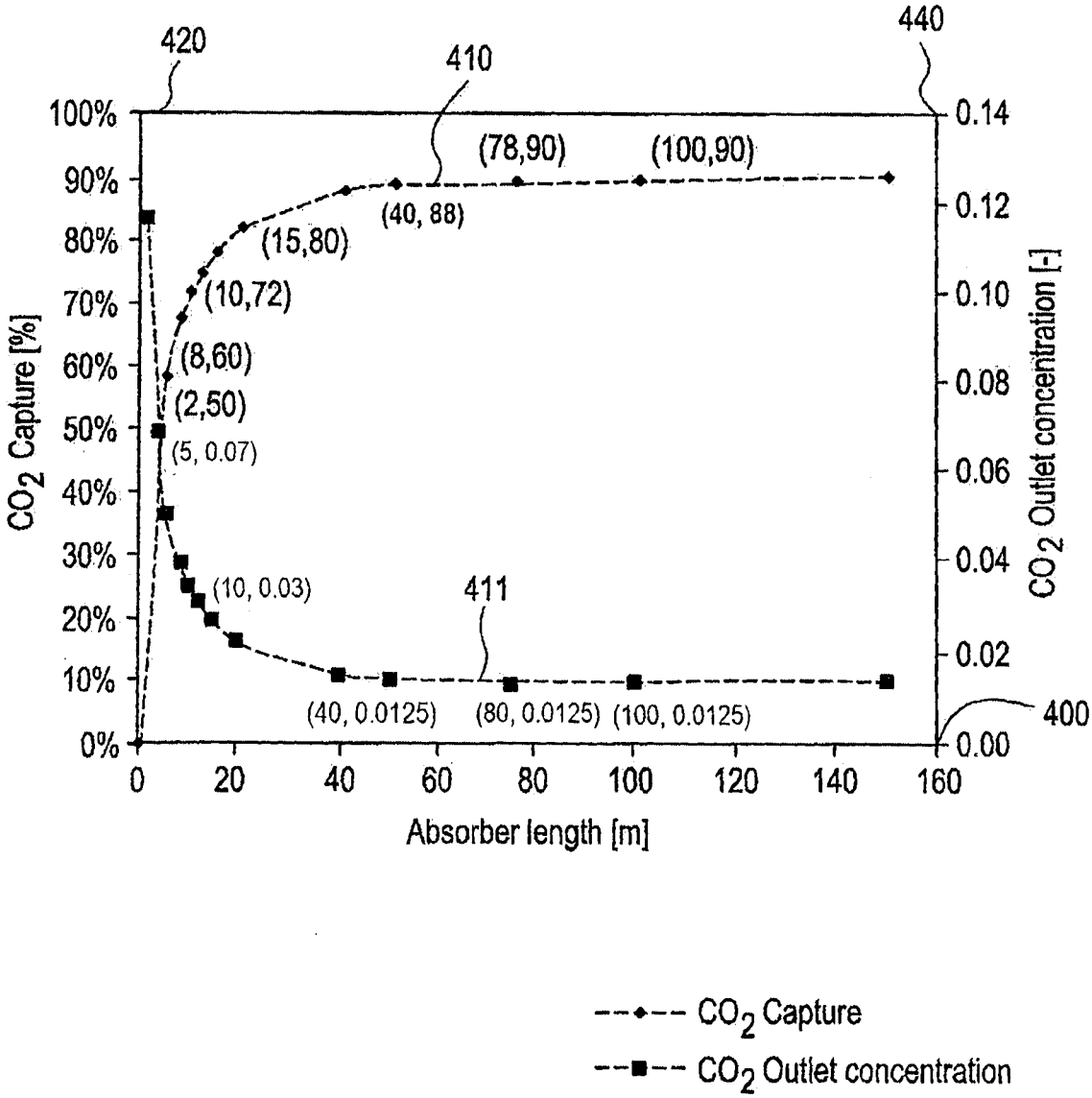
420
410
440
400
411
100%
90%
80%
70%
60%
50%
40%
30%
20%
10%
0%
0.14
0.12
0.10
0.08
0.06
0.04
0.02
0.00
0
20
40
60
80
100
120
140
160
Absorber length [m]
CO_2 Capture [%]
CO_2 Outlet concentration [-]
(78,90)
(100,90)
(40, 88)
(15,80)
(10,72)
(8,60)
(2,50)
(5, 0.07)
(10, 0.03)
(40, 0.0125)
(80, 0.0125)
(100, 0.0125)
CO_2 Capture
CO_2 Outlet concentration

FIG. 3

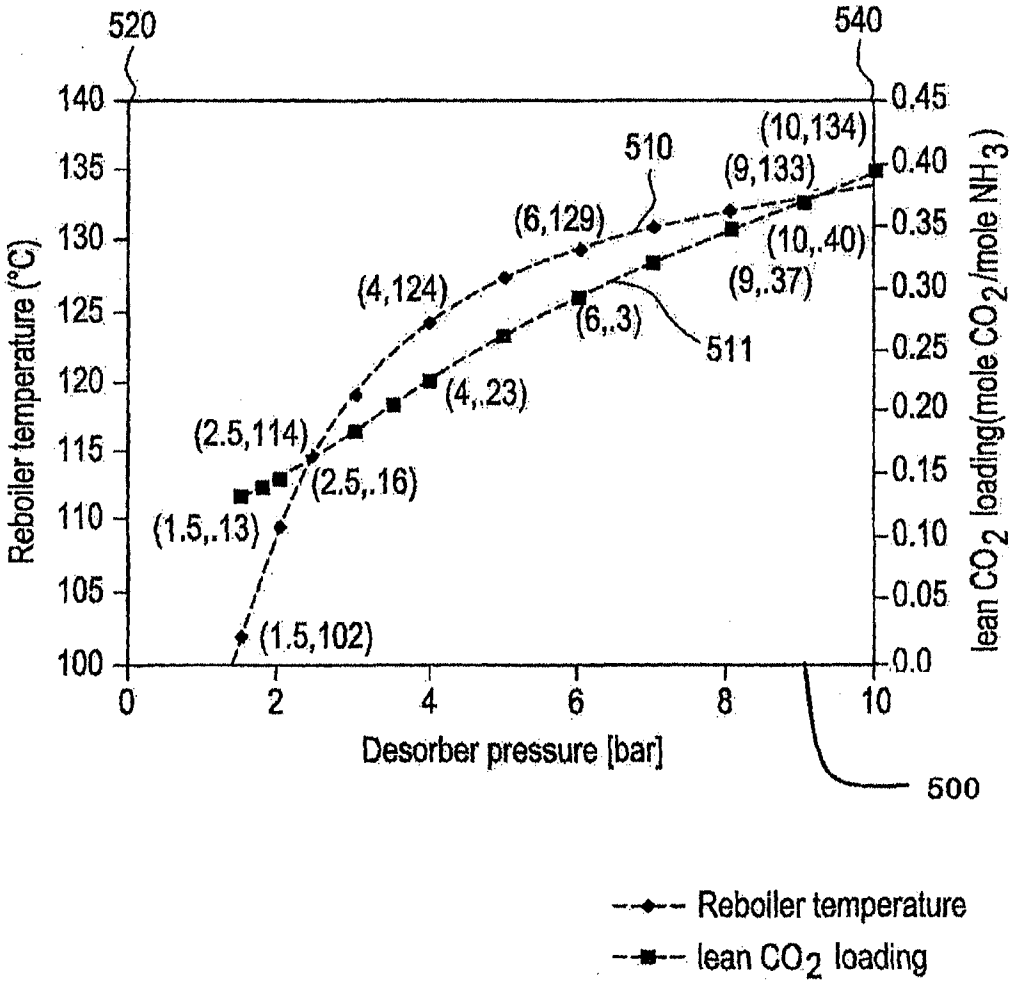
520
540
510
511
500
Reboiler temperature (°C)
lean CO_2 loading(mole CO_2/mole NH_3)
Desorber pressure [bar]
140
135
130
125
120
115
110
105
100
0.45
0.40
0.35
0.30
0.25
0.20
0.15
0.10
0.05
0.0
0
2
4
6
8
10
(10,134)
(9,133)
(6,129)
(10,.40)
(9,.37)
(4,124)
(6,.3)
(4,.23)
(2.5,114)
(2.5,.16)
(1.5,.13)
(1.5,102)
Reboiler temperature
lean CO_2 loading