March 20, 1973 W. G. CORBETT ET AL 3,721,298

PERMAFROST OIL-PRODUCTION METHOD

Filed Oct. 6, 1970

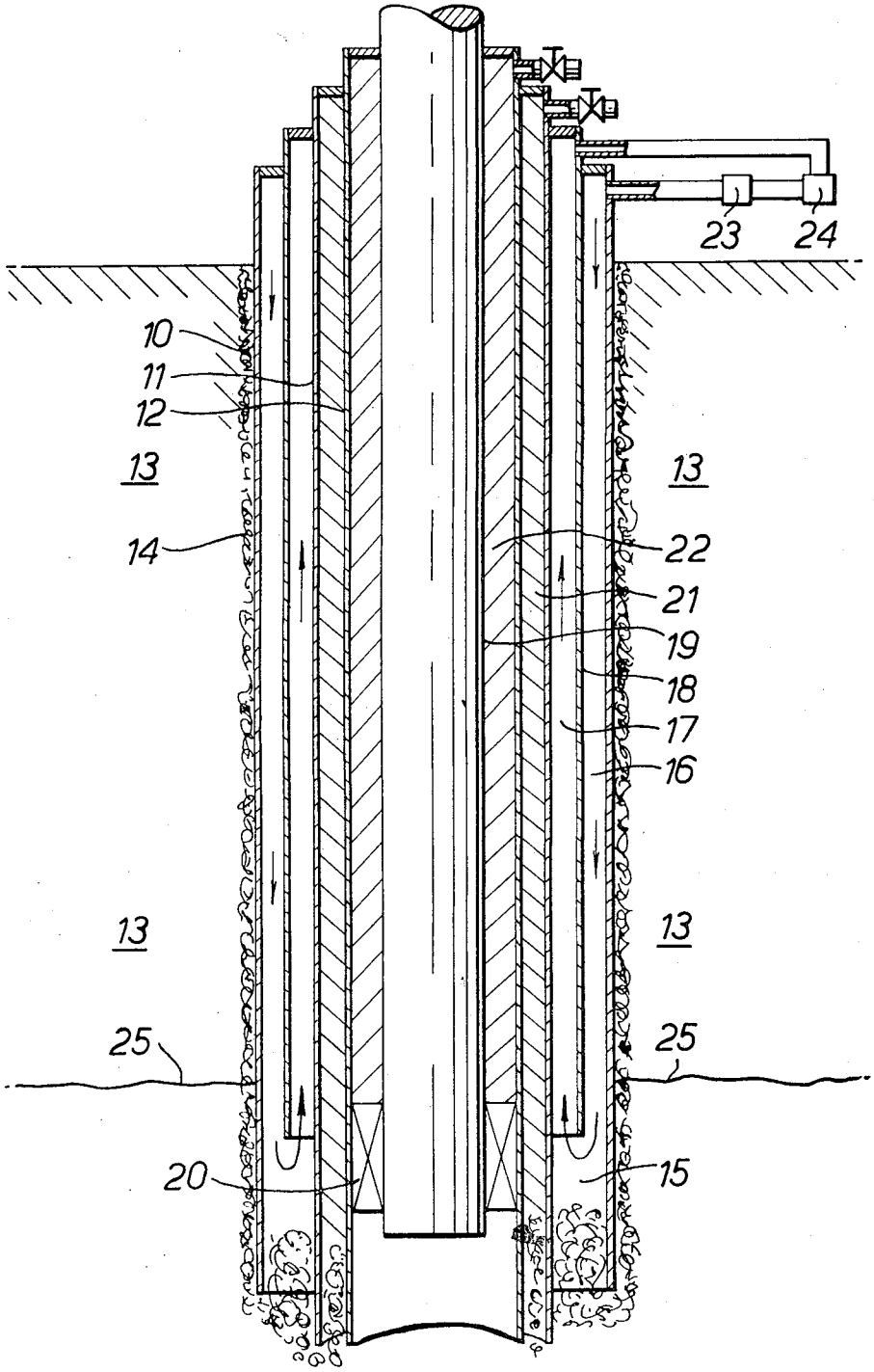


INVENTORS:
WILLIAM GEORGE CORBETT
MICHAEL WARD CLEGG
BY: Morgan, Finnegan, Durham & Pine
THEIR ATTORNEYS

United States Patent Office

3,721,298

Patented Mar. 20, 1973



3,721,298

# PERMAFROST OIL-PRODUCTION METHOD

William George Corbett, 104 Handside Lane, Welwyn Garden City, Hertfordshire, England, and Michael Ward Clegg, 3 Saville Gardens, Prior Road, Camberley, Surrey, England

Filed Oct. 6, 1970, Ser. No. 78,395

Claims priority, application Great Britain, Nov. 10, 1969, 54,891/69

Int. Cl. E21b *43/00*

U.S. Cl. 166—302 1 Claim

## ABSTRACT OF THE DISCLOSURE

Hot oil is produced from a well passing through permafrost by circulating a cold fluid down an outer annulus in contact with the permafrost and returning the fluid to the surface via an inner annulus in contact with the outer annulus and the production string. Preferably there is an insulation layer between the inner annulus and the production string.

This invention relates to an oil well.

Oil has recently been found under the north slope of Alaska and in this location (and also in other locations) the earth's surface consists of a material usually known as permafrost. In this specification the term "permafrost" will be used to denote a geological formation which contains ice in such quantities that the mechanical properties of the formation depend upon the ice so that there would be a substantial change in the mechanical properties should the formation heat to a temperature at which the ice melts and this definition extends to a formation which consists of ice. In Alaska the permafrost consists of a mixture of gravel and ice.

Oil usually issues from a production well at a temperature above 32° F. and there is a danger of melting the ice in the permafrost which surrounds a production well. Since converting ice to water reduces its volume melting the ice in the permafrost will cause subsidence and this subsidence could impose a compressive load high enough to fracture the well casing and hence allow the escape of oil.

It is an object of this invention to reduce the contamination risk of an oil production well passing through permafrost.

According to the invention an oil production well which passes through permafrost comprises an outer casing in contact with the permafrost and a second casing situated inside said outer casing and separated therefrom so as to form an annular space, the well also comprising a separator casing situated in the annular space and dividing it into an inner and an outer zone so as to provide a return flow path through which a cold liquid can be circulated so as to reduce heat transfer to the permafrost.

In a preferred embodiment the well comprises at least one inner casing situated inside the second casing so as to create at least one annulus adapted to contain thermal insulation.

The invention also comprises a method of producing oil at a temperature above freezing point from a well which passes through permafrost, in which a cold liquid is passed from the surface to below the level of the permafrost via an outer annular zone whose outer wall is an outer casing in contact with the permafrost and returned



to the surface through an inner annular zone whose outer wall forms the inner wall of the outer annular zone, the temperature at which the cold liquid enters the outer annular zone being low enough to ensure that its temperature remains below freezing point until it has passed below the level of the permafrost.

The invention will now be described by way of example with reference to the drawing accompanying the provisional specification which shows diagrammatically a cross section through an Alaskan production well.

The well illustrated in the drawing comprises an outer casing **10** (of diameter 18⅝ in.) which extends from the surface to 2300 ft., i.e. to just below the base **25** of the permafrost **13**. This casing is cemented to the permafrost with a cement layer **14**.

A second casing **11**, diameter 13⅜ in., extends from the surface to 4200 ft. Its upper section is situated inside the outer casing **10** so as to create an annulus **15**. Below the permafrost the second casing **12** is cemented to the formation.

Similarly an inner casing **12**, diameter 9⅝ in., extends from the surface to 9100 ft., i.e. to the level of the producing formation. The uppermost 4200 ft. of the casing **12** is situated inside the second casing **11**. The inner casing **12** is cemented to the second casing **11** below the level of the permafrost and to the formation below the level of the second casing **11**. (The well is not illustrated below the permafrost since it conforms with normal practice at these levels.)

The annulus **15**, which is situated at permafrost level, is divided into an outer zone **14** and an inner zone **17** by means of a separator casing **18** so as to provide an outer "down" path and an inner "up" path for cold liquid.

The well also comprises a second inner casing **19** which is sealed to the inner casing **12** by means of a conventional packer **20**. Thus there are two annular spaces, **21** and **22**, and these are filled with thermal insulation, e.g. expanded polyurethane.

As it issues from the production well the oil is at a temperature of about 170° F. and to reduce heat conduction to the permafrost a pump **23** circulates a cold liquid, e.g. an oil of low enough pour point, down the outer zone **16**, up the inner zone **17**, to a refrigerator **24** to remove the heat gained during circulation and then back to the pumps **17**. The initial temperature is low enough to ensure that the cold liquid remains below freezing point at the bottom of the annulus **15** and it is clear that this avoids the danger of melting the permafrost. The conduction of heat from the hot oil inside the second inner casing **19** to the cold liquid in the inner zone **17** is reduced by the thermal insulation in the annular spaces **21** and **22**. This reduces the power consumption needed to cool the cold liquid.

In addition to the features illustrated in the drawing the well comprises a conventional tubing string and well head equipment in accordance with normal practice. All the casings (**10**, **11**, **12**, **18** and **19**) are suspended from the well head equipment so that the upper portions remain in tension.

We claim:

**1**. A method of producing oil at a temperature above the freezing point of water from a well which passes through permafrost, comprising passing a cold liquid from the surface to below the level of the permafrost via an outer annular zone whose outer wall is an outer casing

positioned in said well in contact with the permafrost and returning said liquid to the surface through an inner annular zone whose outer wall is a casing in the well which also forms the inner wall of the outer annular zone, while producing said oil through a casing enclosed by said inner zone, the temperature at which the cold liquid enters the outer annular zone being low enough to ensure that its temperature remains below the freezing point of water until it has passed below the level of the permafrost.


**References Cited**

UNITED STATES PATENTS

| | | | |
|---|---|---|---|
| 3,561,531 | 2/1971 | Miller | 166—DIG. 1 |
| 1,342,780 | 6/1920 | Vedder | 166—302 X |
| 1,812,267 | 6/1931 | Lewis | 166—302 UX |
| 3,142,336 | 7/1964 | Doscher | 166—57 X |
| 3,217,791 | 11/1965 | Long | 166—DIG. 1 |
| 3,380,530 | 4/1968 | McConnell et al. | 166—303 |
| 3,456,735 | 7/1969 | McDougall et al. | 166—57 UX |
| 3,498,381 | 3/1970 | Earlougher | 166—303 |
| 3,613,792 | 10/1971 | Hyde | 166—315 |

FOREIGN PATENTS

| | | | |
|---|---|---|---|
| 1,842,205 | 1/1967 | U.S.S.R. | 166—DIG. 1 |



ROBERT L. WOLFE, Primary Examiner

U.S. Cl. X.R.

166—57, Dig 1

PO-1050
(5/69)

# UNITED STATES PATENT OFFICE
# CERTIFICATE OF CORRECTION

Patent No. 3,721,298 Dated March 20, 1973

Inventor(s) W.G. Corbett et al

It is certified that error appears in the above-identified patent and that said Letters Patent are hereby corrected as shown below:

| | | |
|---|---|---|
| Col. 2, Line 31, for "14" | read | -- 16 -- |
| Col. 4, Line 10, for "1,842,205" | read | -- 184,205 -- |

In Column 1, line 6, after "England", -- Assignor to -- The British Petroleum Company Limited, London, England --. should be added.

Signed and sealed this 10th day of December 1974.

(SEAL)
Attest:

McCOY M. GIBSON JR.
Attesting Officer

C. MARSHALL DANN
Commissioner of Patents