T. MAXON.

CLAMPS FOR HOISTING MONUMENTS, PILLARS, &c.

No. 193,982. Patented Aug. 7, 1877.

Fig. 1.

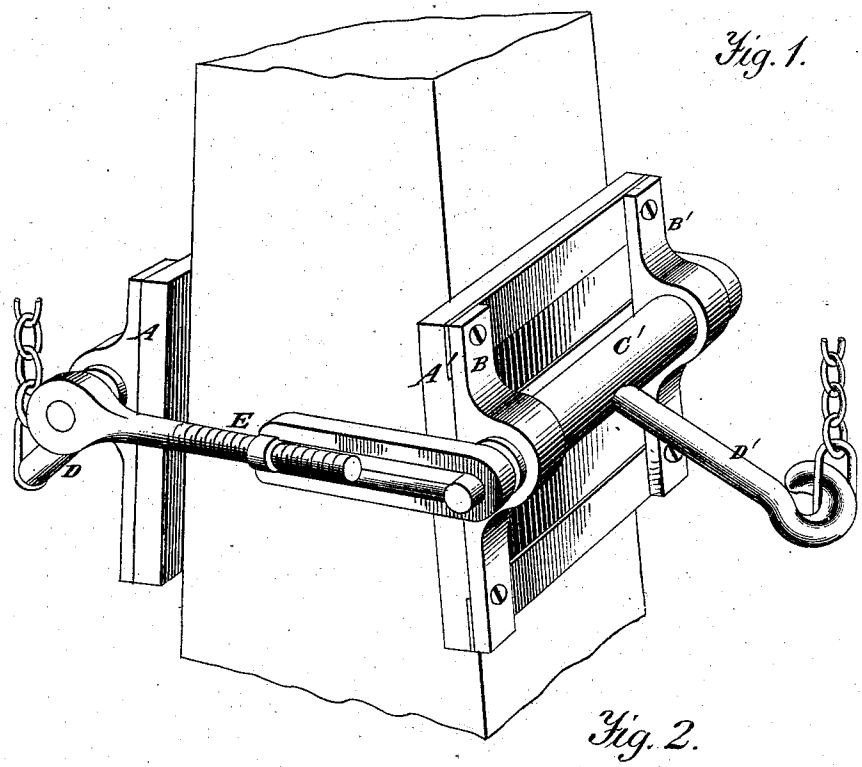

Fig. 2.

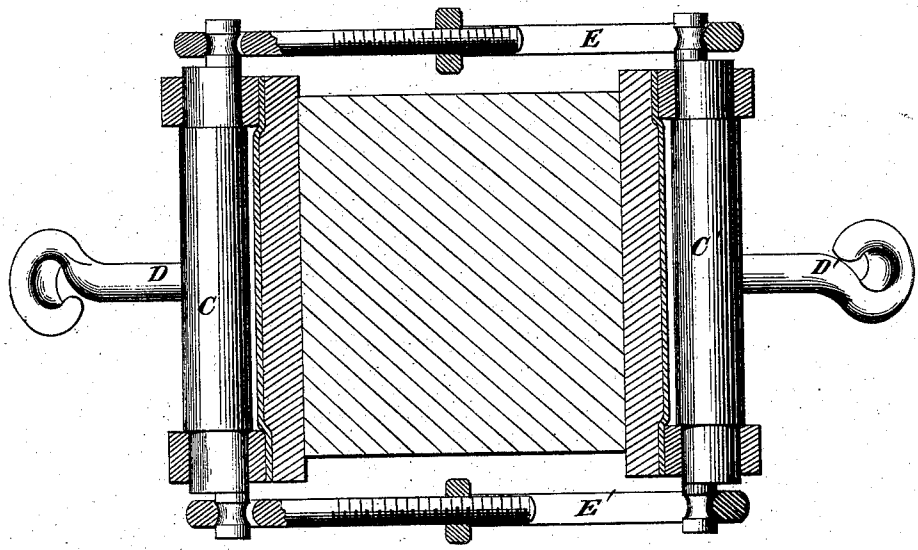

Witnesses.

A. Ruppert,

D. P. Holloway

Thomas Maxon

Inventor:

D. P. Holloway & Co
Attys

N. PETERS, PHOTO-LITHOGRAPHER, WASHINGTON, D. C.

UNITED STATES PATENT OFFICE.

THOMAS MAXON, OF SPRINGFIELD, OHIO.

IMPROVEMENT IN CLAMPS FOR HOISTING MONUMENTS, PILLARS, &c.

Specification forming part of Letters Patent No. **193,982**, dated August 7, 1877; application filed June 20, 1877.

To all whom it may concern:

Be it known that I, THOMAS MAXON, of Springfield, in the county of Clarke and State of Ohio, have invented a new and useful Improvement in Clamps for Hoisting, of which the following is a specification:

This invention consists of two plates, connected on each side by adjusting-bars working on eccentrics, which are operated by means of levers. It has for its object the hoisting of monuments, pillars, &c., of any shape, without defacing the surfaces by scratching or nicking. It is designed particularly for the hoisting of tapering monuments when the surfaces are highly polished, and where a rope put around them, as is usual in hoisting pillars, &c., would not hold without the faces being defaced.

In the annexed drawings, making a part of this specification, Figure 1 is a perspective view, showing the clamp adjusted to a tapering monument. Fig. 2 is a transverse section.

The same letters are employed in both figures in the indication of identical parts.

A and A′ represent the two plates, which may be covered with india-rubber, leather, or any other suitable material, to preserve the polish of the faces of the thing being hoisted, and also to increase the friction.

On each side of the plates are fastened cleats B B′, which serve to strengthen the plates, and also form bearings in which the eccentrics C C′ may turn.

The eccentrics are operated by means of the levers D D′, which have eyes bent in the ends, into which a chain or rope, passing from one lever to the other, is hooked, and to this chain the derrick-block is attached. The two plates are connected together by means of adjusta-rods E E′, which fit over the ends of the eccentrics just outside of the bearings. By means of these rods the clamp may be made adjustable to any sized pillar, monument, &c., that may be desired.

After the plates have been adjusted, the levers then being turned partially down, the chain, passing from one lever to the other, is attached to the block of the hoisting-tackle, and the weight of the thing being hoisted will be sufficient to raise the levers, and thus by means of the eccentrics cause the two plates to bind firmly against the faces of the pillar, monument, or whatever is being hoisted.

This clamp differs from others heretofore used in this, that the eccentrics do not themselves bear against the monument, but act upon the plates A′ A, which are immovable on the surface, and there is, therefore, in this case, no movement of parts to tend to break or mar the monument.

What I claim as my invention, and desire to secure by Letters Patent, is—

In combination with the friction-plates A A′ of a clamp for hoisting, the eccentrics C C′, levers D D′, and adjusting-bars E E′, substantially as and for the purpose set forth.

In testimony whereof I have signed my name to this specification in the presence of two subscribing witnesses.

THOMAS MAXON.

Witnesses:

A. E. MCCONKEY,

H. S. SHOWERS.