R. H. GAYLORD.

ELEVATOR SIGNAL SYSTEM.

APPLICATION FILED APR. 10, 1917.

1,322,895.

Patented Nov. 25, 1919.

4 SHEETS SHEET 1.

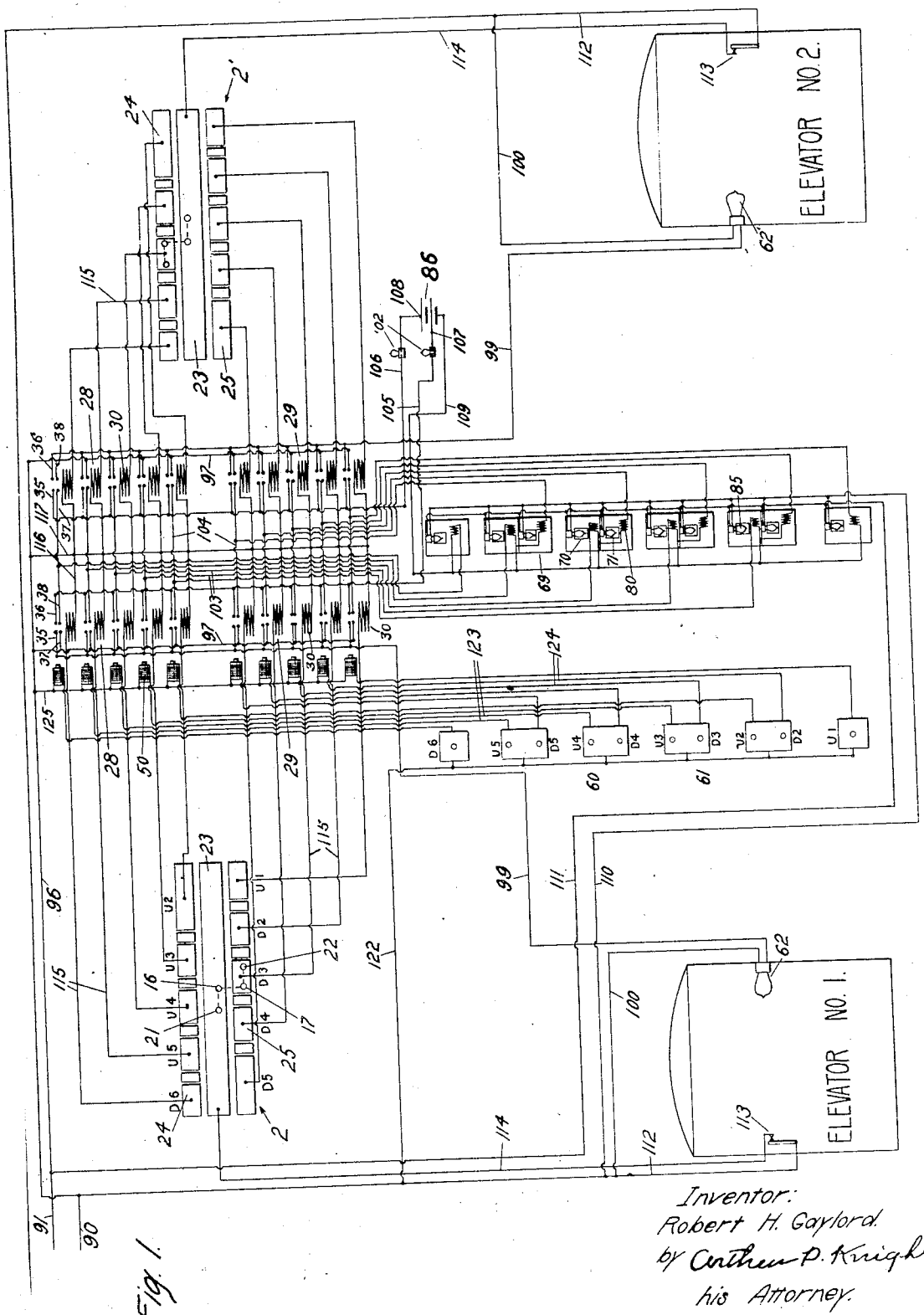

Fig. 1.

Inventor:
Robert H. Gaylord
by Cuthbert P. Knight
his Attorney.

R. H. GAYLORD.

ELEVATOR SIGNAL SYSTEM.

APPLICATION FILED APR. 10, 1917.

1,322,895.

Patented Nov. 25, 1919.

4 SHEETS—SHEET 2.

Fig. 2.

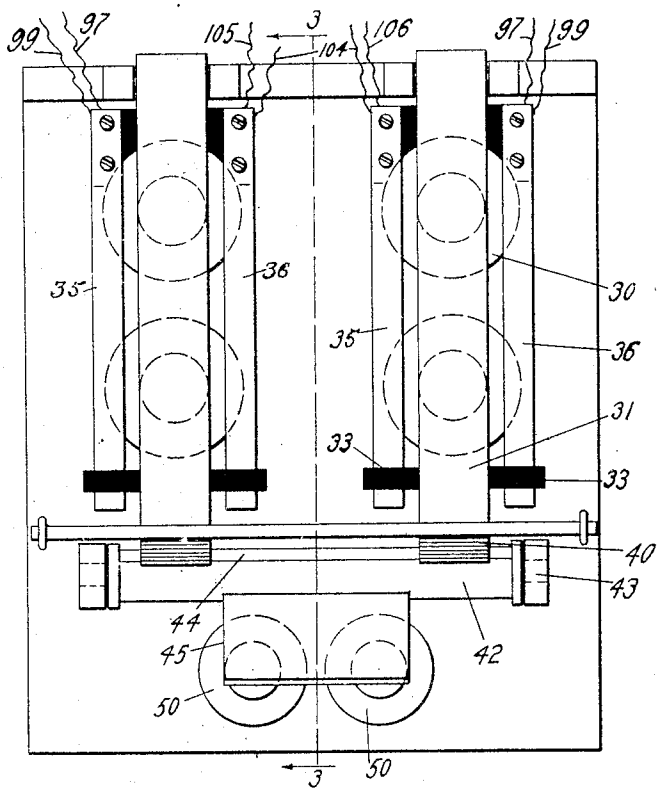

Fig. 3.

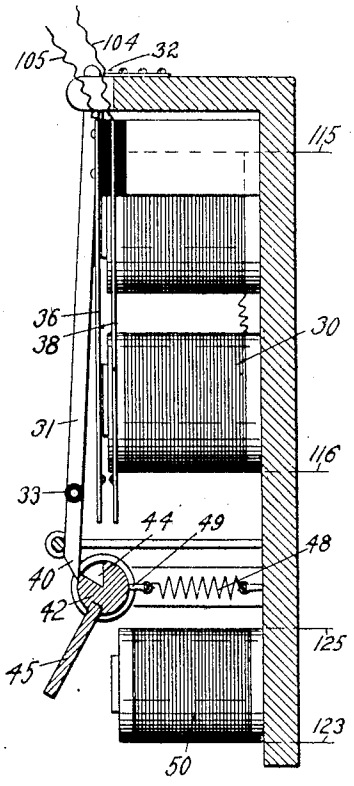

Fig. 3a.

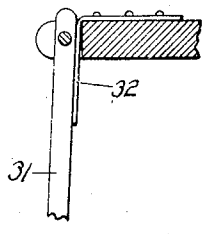

Fig. 4.

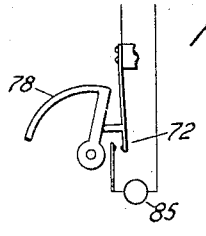

Inventor:
Robert H. Gaylord
by
Arthur A. Knight
his Attorney.

R. H. GAYLORD.

ELEVATOR SIGNAL SYSTEM.

APPLICATION FILED APR. 10, 1917.

1,322,895.

Patented Nov. 25, 1919.

4 SHEETS—SHEET 3.

Fig. 13.

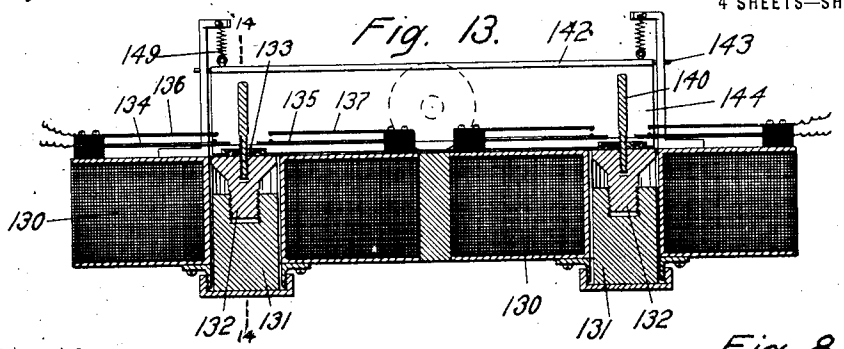

Fig. 14.

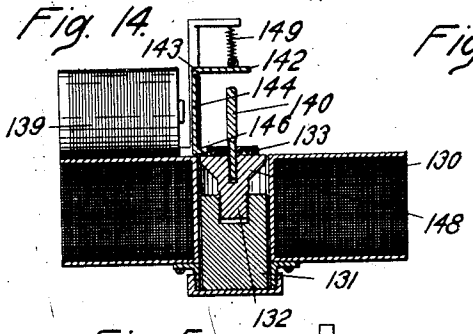

Fig. 7.

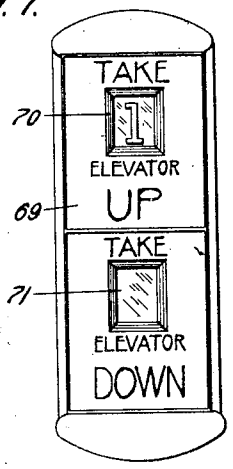

Fig. 8.

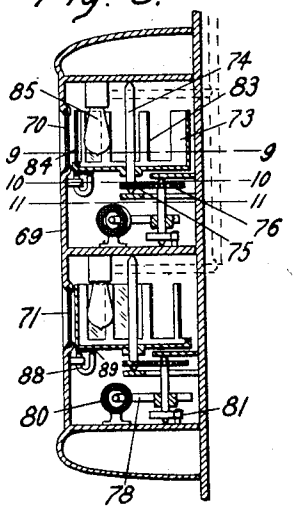

Fig. 5.

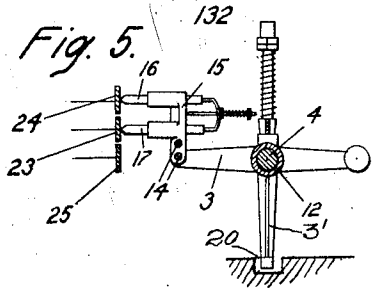

Fig. 6.

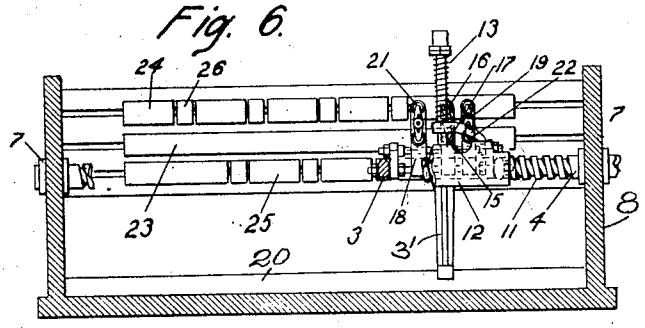

Fig. 9.

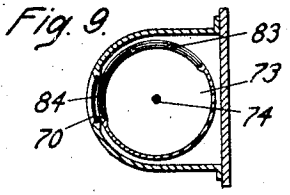

Fig. 10.

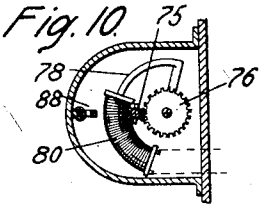

Fig. 11.

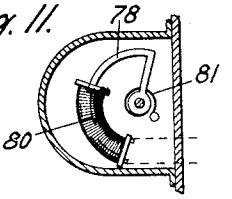

Fig. 12.

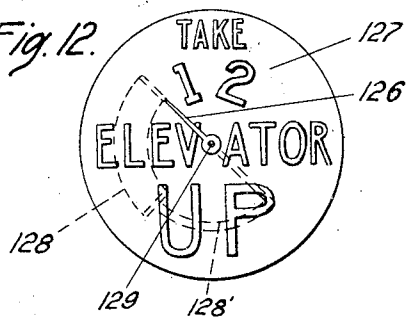

Inventor:
Robert H. Gaylord
by Arthur P. Knight
his Attorney.

R. H. GAYLORD.

ELEVATOR SIGNAL SYSTEM.

APPLICATION FILED APR. 10, 1917.

1,322,895.

Patented Nov. 25, 1919.

4 SHEETS—SHEET 4.

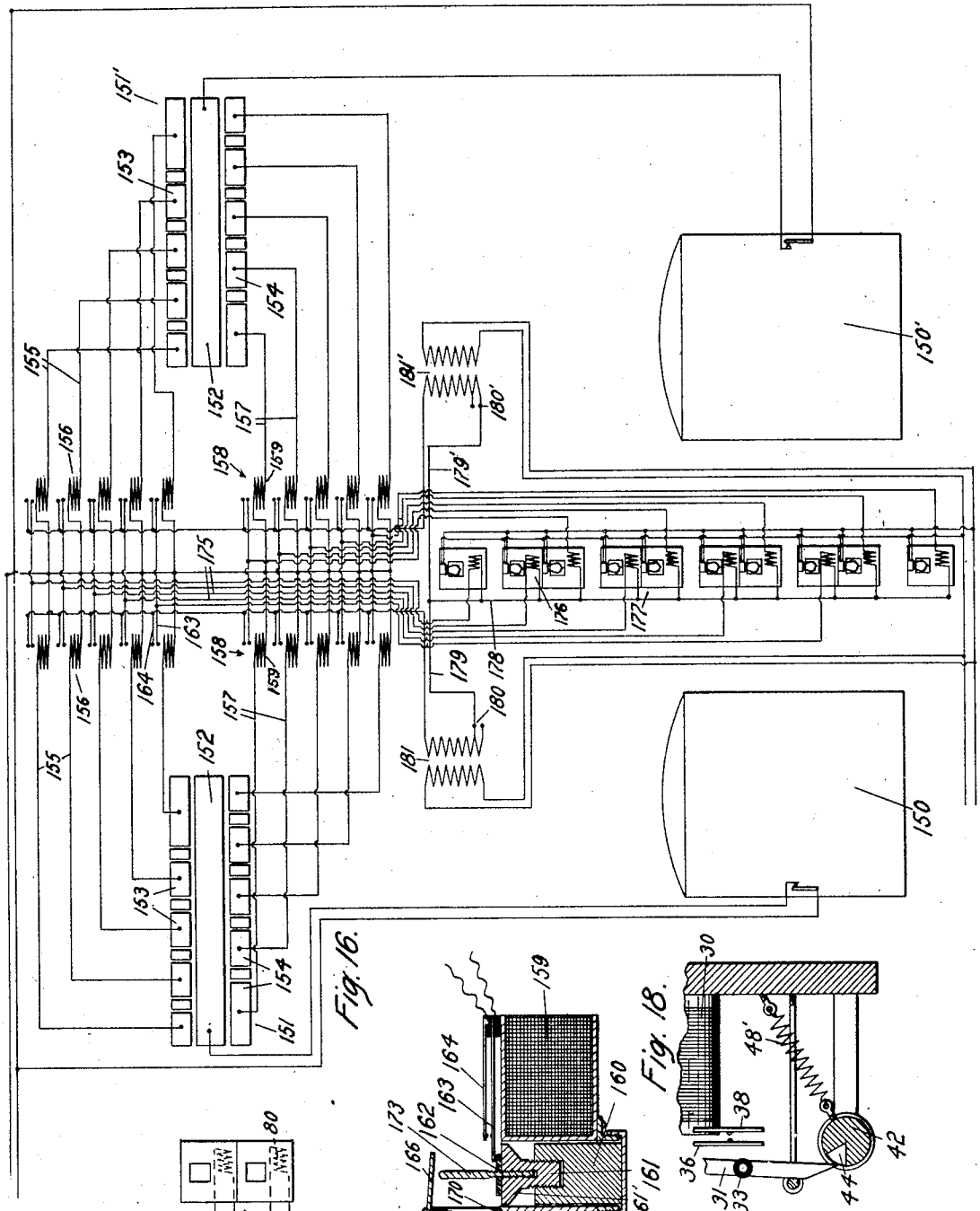

Fig. 16.

Fig. 17.

Fig. 18.

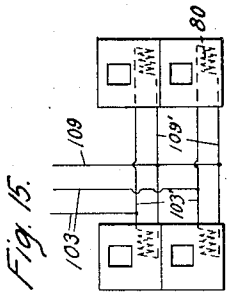

Fig. 15.

Inventor:
Robert H. Gaylord
by Arthur P. Knight
his Attorney.

UNITED STATES PATENT OFFICE.

ROBERT H. GAYLORD, OF PASADENA, CALIFORNIA, ASSIGNOR TO R. H. GAYLORD COMPANY, OF LOS ANGELES, CALIFORNIA, A CORPORATION OF CALIFORNIA.

ELEVATOR SIGNAL SYSTEM.

1,322,895. Specification of Letters Patent. Patented Nov. 25, 1919.

Application filed April 10, 1917. Serial No. 160,926.

To all whom it may concern:

Be it known that I, ROBERT H. GAYLORD, a citizen of the United States, residing at Pasadena, in the county of Los Angeles and State of California, have invented a new and useful Elevator Signal System, of which the following is a specification.

This invention relates to elevator signal systems of the type in which signal means are provided at each landing, to give notification at the landing of the approach of any one of a plurality of elevator cars, in such manner that a person at the landing will be informed as to which one of such cars is approaching and in which direction it is moving. In some cases the operation of such signals is subject to control by the motion of the cars and also by the operation of push buttons at the landings so that a signal will only be given at a landing from which a call has been sent requiring a stop by the car which is momentarily controlling the signal. In other cases, particularly in department store elevators, the signal means are under the control of the cars in such manner that a signal is given at each landing passed, no call means being provided at the landings.

The present invention is applicable in connection with elevator signal systems of either the type in which the landing signals are under control of both the cars and landing push buttons, or of the type in which the landing signals are under control of the cars alone. The main object of the present invention is to simplify the construction of the elevator signal systems of this type and particularly to reduce the amount of wiring and of landing signals required in elevator signal systems. As now generally installed, a set of landing signals for both the up and down directions is usually provided at each landing for each car. In case of a system including a large number of elevator shafts such a system involves a large expense in the installation of the landing signals, not only on account of the large number of landing signal devices required, such number being the product of the number of floors by the number of elevator shafts, but also and mainly on account of the material and labor involved in the wiring, it being necessary to provide separate connections to each landing signal from the overhead car-operated switch. An important object of the present invention in this connection, is to provide a single visual signal means at each landing for each direction of movement of the car, which is adapted to be operated selectively or differently by the different cars so as to selectively indicate by said single signal means, which one of the plurality of cars is approaching the landing. This result, I accomplish by providing a signal means, which is adapted to be operated to indicate different cars and by providing car-operated means, whereby the current transmitted to the respective signal means is varied or controlled, according to the car which is momentarily in control of the signal service.

Another object of the invention is to provide an elevator signal system, of the type above referred to, with means whereby the signal given at any landing will indicate definitely and without confusion which one of a plurality of cars the waiting passenger is to take and if a number of cars are approaching the landing so as to be at the same time within the signaling zone, the first one to reach said zone or to get in position for signaling will assume control of the signal at the landing and the other cars will be locked out of control until said first car has relinquished control, either by passing out of the signaling zone or by operation of a transfer switch.

Another object of the invention is to provide means whereby under the conditions just stated the passage of any car out of the signaling zone will result automatically in a transfer of the signal circuits to operative relation with the other cars, so that any other car which is at that time within the signaling zone and which was locked out of such operative relation will, under the conditions stated, immediately receive the signal and control the landing signal to notify the waiting passenger that this second car will take him on. This is an important advantage, for the reason that, in some cases with the present system of flash signals at the landings, two or more cars may approach the landing about the same time and the first operator to reach the landing may neglect to either stop or to transfer the signal with the result that in the operation of the usual overhead control means, the controlling circuits for the other car or cars at that time within the signaling zone, become automatically disabled and the pas-

senger will have to wait for the arrival of another car, which had not entered the signal zone by the time the first car had passed out of such zone. Any such inconvenience is obviated by my present invention.

Another object of the invention is to provide interlocking means under the control of each car operator, whereby said operator may transfer a call for any landing to any other car, provided said other car is within the signal zone for the said landing, and to notify the waiting passenger that another car will serve him.

Figure 1 is a diagrammatic elevation of an elevator signal system provided with landing push button control and embodying my invention.

Fig. 2 is a front elevation of a set of the electromagnetic devices controlling the signal circuits by operation of the car-operated switch.

Fig. 3 is a section on line 3—3 in Fig. 2.

Fig. 3ª is a detail section of a portion of the armature shown in Fig. 3.

Fig. 4 is a diagram showing means for controlling current to the landing signal lamp.

Fig. 5 is a transverse section of the car-operated switch.

Fig. 6 is a side elevation thereof with parts broken away, the casing being shown in section.

Fig. 7 is a front elevation of one of the landing signals, including "up" and "down" signal means.

Fig. 8 is a vertical section thereof.

Fig. 9 is a section on line 9—9 in Fig. 8.

Fig. 10 is a section on line 10—10 in Fig. 8.

Fig. 11 is a section on line 11—11 in Fig. 8.

Fig. 12 is a front elevation of a modified form of landing signal.

Fig. 13 is a vertical section of a modified form of the electromagnetic devices for controlling the signal circuits.

Fig. 14 is a section on line 14—14 in Fig. 13.

Fig. 15 is a diagram of the landing signal at a floor and the wiring therefor in case more than one of such signals is required at a landing.

Fig. 16 is a diagram illustrating the application of my invention to a department store elevator signal system.

Fig. 17 is a section of a form of interlocking electromagnetic device adapted for operation in the system shown in Fig. 16.

Fig. 18 is a section similar to Fig. 3, showing a form of interlock adapted for use with a department store signal system.

In Fig. 1 of the drawings, I have shown my signal system as applied in connection with two elevator cars, indicated as No. 1 and No. 2. It will be undertsood however, that it is applicable in connection with any number of cars and its advantages are especially apparent with a large number of cars, say four or more. In said figure two elevator cars are operated in the usual manner and are connected to car-operated switches 2 and 2′, so that each switch is operated in correspondence with the corresponding elevator car.

Each car-operated switch may be of the construction shown in Figs. 5 and 6, comprising arms 3 mounted on a shaft 4 extending longitudinally of the switch, said shaft being journaled in suitable bearings 7 on a frame 8 and provided with the usual means whereby it is operated in correspondence with the movement of one of the cars. Said shaft 4 is provided with a screw thread indicated at 11 and arms 3 are provided with a nut 12 engaging said screw thread so that said arms are propelled in one direction or the other longitudinally of the switch according to the direction of rotation of the shaft, said nut being provided with a frictional device 13, (as is usual in car-operated switches of this character) whereby the friction of the nut on the thread is made sufficient to cause the arms 3 to tilt one way or the other according to the direction of rotation of shaft 4, this tilting movement being limited by engagement of an arm 3′ on nut 12, with one or other wall of a groove 20, on frame 8. Said arms 3 carry bars 14 from which extends vertically a brush holder 15, in which are mounted two brushes 16 and 17. Additional brush holders 18 and 19 may be provided on said bars 14 supporting respectively brushes 21 and 22. Each switch 2 and 2′ further comprises fixed contact means comprising a longitudinal strip 23 of metal, a series of metal segments 24 arranged in a row above said strip 23 and a series of metal segments 25 arranged in a row below the strip 23. Spacing or insulated segments 26 may be provided between the respective segments 24 and between the respective segments 25. The brushes 16 and 17 are so mounted that when the arm 3 is in a position corresponding to upward movement of the car, said brush 16 will travel over the upper row of segments 24 and the brush 17 will travel on the strip 23 and when the arm 3 is tilted downwardly by the downward motion of the car, the brush 16 will travel on the strip 23 and the brush 17 will travel over the segments 25. The brushes 21 and 22 are provided to give the desired advance signaling contact in either direction of movement.

The segments 24 and 25 of each car-operated switch are connected to circuit wires as hereinafter explained so as to control the operation of electromagnetic devices 28 and 29 respectively, there being in general two sets of these electromagnetic devices for

each floor; namely, one for "up" and one for "down" signaling, and there being as many of said devices in each set as there are cars. Due to special conditions in the operation of the car-operated switches, however, the electromagnetic devices, contacts, etc., corresponding to downward movement of the car at the top floor are arranged in the same series as the devices corresponding to upward travel at the intermediate floors, and the devices corresponding to upward movement at the bottom floor are in the same series as the devices corresponding to downward movement at the intermediate floors. The arrangement of the devices is indicated in the drawings by the characters "U 1", "D 2", etc., "U" indicating upward and "D" downward movement, and the numerals representing the respective floors.

Each of these electromagnetic devices may comprise a magnet or coil 30 and an armature 31, which is adapted to be operated thereby, said armature being restored to normal position (in the form shown in the drawing), by the action of a spring 32. Said armature carries insulated studs 33 adapted to engage contact springs 35 and 36, so as to force them into contact with other contact springs 37 and 38, controlling certain signal circuits as hereinafter described. Each armature is further provided with a shoulder or portion 40 adapted to engage interlocking means, as hereinafter set forth.

The interlocking means for each set of the above described electromagnetic devices consists preferably of a rock shaft 42 mounted in bearings 43 and normally held, by a spring 48, in position to normally engage the end portions or shoulders 40 of the armatures 31 and to prevent movement of the armatures toward the magnets 30, said shaft having a longitudinal groove 44 which, when the shaft 42 is turned by operation of an armature 45 of an unlocking magnet 50 is brought opposite the portion 40 of the armatures 30, so as to permit operation of the latter. Armature 45 is preferably of steel so as to tend to hold to the core of the magnet when it has been drawn close thereto. The spring 48 is adapted to resiliently resist displacement of shaft 42 either way from normal position, said spring being for example a tension spring connected to a support and to a projection 49 on shaft 42.

The unlocking magnets 50 are connected to the respective push buttons at the landings, there being an "up" push button 60 at each landing except the top landing and a "down" push button 61 at each landing except the bottom landing. The circuits connected to the contacts 35 and 37 control pilot lamps indicated at 62 and 62' in the respective cars. Circuits controlled by the contacts 36 and 38 operate the landing signals.

Each of the landing signals (as shown in Figs. 7 to 11) may comprise a casing 69 formed, in the case of each of the floors, except the top and bottom floors, with upper and lower window openings 70 and 71 for display respectively of "up" and "down" signals. The "up" and "down" signal means mounted within said casings are of identical construction, each comprising for example an indicating member 73 mounted on a vertical pivot or shaft 74 and connected by gearing 75—76 or otherwise to an armature or core 78, which is operated by a coil or solenoid 80 connected in the signal circuit. A spring 81 may be provided to restore the armature and indicating means to normal position. The said indicating means may comprise a cylindrical carrier mounted on the shaft 74 provided with seats or shoulders 83 for cards or slips 84 bearing the marks, such as numerals 1, 2, etc., corresponding to the different cars. These slips are preferably transparent, and electric lamps 85 may be provided for illumination thereof. The portions of the cylindrical wall of members 73 not cut away to receive the cards or slips 84 are preferably of opaque material, so that although the lamps 85 are operated continually the openings 70 and 71 are not illuminated until the signal member 73 is operated to bring one of the cards or slips bearing the landing numbers into view, the flash so produced attracting the attention of the waiting passenger. If, however, it is desired to avoid the use of current in said lamps except when the indication is being made, this may be effected by including a switch or circuit closer in the circuit of said lamp, as indicated at 72 in Fig. 4, this circuit closer being normally held open by engagement of member 78 with one member thereof, and being closed automatically, by spring action of said member when the latter is moved from normal position.

Each of the landing signals is connected for operation by the car-operated switches of all of the elevator cars, and the extent of its movement is different for the different cars, the several car-operated switches having respectively, circuit connections adapted to send currents of different strength through the operating coils of said signals, and the extent to which the armature or core 78 is operated being dependent on the intensity of the current in its operating coil. Retarding or damping means may be provided for the indicating member 73 in its rotation, consisting for example of a horse shoe magnet 88 fastened to the casing underneath said member, which is preferably of some light metal such as aluminum, and iron lugs 89 may be provided on the bottom

face of said member, so as to tend to bring and hold it in position so that one of the cards or slips 84 is directly behind the opening 70 or 71. Suitable directions may be provided on the front of casing 69 for cooperating with the numerals displayed in openings 70, to indicate to a waiting passenger what car will serve him.

The circuit connections are as follows: From a wire 90 of a supply circuit, a wire 112 leads to transfer switch 113 in each car and from said switch a wire 114 leads to the long contact strip 23 of the corresponding car-operated switch. It will be understood that the connections to the car, for the switch 113 and for the lamps 62 are made through the usual flexible cables. From each of the "up" segments of said switch (and the "down" segment for the top floor) a wire 115 leads to the electromagnet or coil 30 for the corresponding electromagnetic device 28 and from said electro-magnet a wire 116 leads to a common return wire 117 connected to wire 96 leading to line wire 91. Wire 112 may also be connected by wire 100 to lamp 62 or 62′ in the car, from which a wire 99 leads to all the contacts 35 of the controlling devices. The corresponding contacts 37 are connected by wire 97 to the wire 96. The landing signal lamps 85 may also be energized from said supply circuit by wire 110 leading from wire 112, and by wire 111 leading to wire 96, the said lamps being connected in parallel in branch circuits between said wires 110 and 111. The push button circuits may also be energized from the same supply line, a wire 122 leading from wire 112 to all the push buttons 60 and 61 for both up and down signaling and wires 123 and 124 leading from the up and down buttons 60 and 61 respectively to the unlocking electro-magnets 50 for the respective up and down sets of interlocking devices. From said electro-magnets a wire 125 leads to the return wire 96.

As shown in Fig. 1, the floor or landing signal circuits may be energized by a separate source of current, consisting for example of a storage battery 86, wires 105, 106 being connected to taps 107, 108 of different potential in said battery and leading respectively to controlling devices under the control of different car-operated switches, wire 105 being connected to all the contacts 36 of devices 28 and 29 controlled by number 1 car, say, and wire 106 being connected to all the contacts 35 of the devices 28 and 29 controlled by number 2 car. The coöperative contacts 38 of the said devices for elevator No. 1 are connected by a wire 104 to a wire 103 leading to the coils 80 of the corresponding landing signal, and from said coils 80 a wire 109 leads back to the other side of battery 86. The corresponding contacts 37 for elevator No. 2 are also connected by wire 104 to wire 103. A resistance, such as lamp 102 may be included in each of these landing signal circuits, to prevent short circuiting under certain conditions. The wire 103 to each landing signal is connected by the wire 104 to all the contacts 38 in the set of controlling devices corresponding to that landing and to that direction of movement.

The operation of this system is as follows:

Assume that a person wishing to signal an elevator pushes one of the push buttons, for example the down push button 61 at the third floor landing. A circuit is thereby completed through supply wire 90, wires 112 and 122, said push button 61, the corresponding wire 124, electromagnet 50 of a "down" controlling device 29 and wires 125 and 96 to the other supply wire 91. The electromagnet thus energized moves armature 45 and shaft 42 so as to bring groove 44 opposite the end portions 40 of armatures 31 of all the electromagnets 30 in the corresponding set or row and the armature of said electromagnet 50 being of steel will hold shaft 42 in this position by residual magnetism after the push button circuit has been opened so that the subsequent energization of any one of said electromagnets 30 will permit the operation of the corresponding armature 31.

As shown in Fig. 1 the brushes 17 and 22 of the car-operated switch corresponding to the elevator car No. 1 are riding on the lower contact 25 corresponding to the magnet 30 in a set which has been previously unlocked as above described. It will be understood that at this time the car 1 is in its downward movement and has reached a position somewhat above the third floor landing. Any desired amount of advance in the signaling operation controlled by the operation of the car-operated switch, say one floor, may be obtained by adjusting the relative positions of brushes 17 and 22. When the brushes are in the position shown a circuit is completed through wires 90 and 112, switch 113, wire 114, contact 23, brushes 21 and 16, bars 14, brushes 17 and 22, a contact 25, wire 115, electromagnet 30, and thence back through wires 116 and 117 to wire 96. The electromagnet 30 is thereby energized and operates its armature 31 so as to cause the portion 40 thereof to strike the rear wall of groove 44 in shaft 42 and turn said shaft, overcoming the residual magnetic holding effect, of armature 45, so as to bring the ungrooved portion thereof opposite end portion 40 of the other armature 31, thereby locking out the other armatures 31 from effective operation and preventing interference between different cars in this operation of shaft 42 by armature 31 of any other electromagnet 30. The operation of armature

31 also causes the insulated plate 33 to force spring contact 35 against contact 37 and spring contact 36 against contact 38. Two separate signal circuits are thus completed, a car signal circuit and a landing signal circuit. The current for operating the car signal flows from live wire 90 through wires 112 and 100 to the pilot or signal lamp 62 of car No. 1, wire 99, contacts 35 and 37, and thence back to the live wire 91 through wires 97 and 96. The pilot lamp 62 in No. 1 is thus lighted, indicating to the operator that he is to stop at the next floor.

The landing signal current flows from the battery 86 through tap 107, wire 105 to contacts 36 and 38, thence by wires 104 and 103 to the coil 80 of the corresponding landing signal and thence back to the battery through wires 109. The coil 80 of the "down" landing signal at the third floor is thereby energized, attracting its armature 78 and causing said armature and the signaling or indicating member 73 connected thereto to rotate about their axes. The degree of energization of said coil and therefore the arc through which said indicating member is turned is different for the different cars, this difference being obtained for example by connection to taps 107 and 108 to different points in the battery. Thus the energization produced in said coil by the circuit for car 1 is just sufficient to bring the part 84 bearing the numeral "1" into position behind the opening 70 in the casing 69, while the circuit for car 2 would produce sufficient energization to bring the part bearing the numeral "2" behind said opening. The circuits having been completed as above described, the person waiting at the landing is thus informed that he is to take car No. 1 down.

As soon as brush 17 leaves contact 25 corresponding to the third floor, the coil 30 is deënergized and its armature 31 is returned to normal position by action of spring 32 and a portion of armature 31 forcibly strikes and rides over the forward wall of groove 44, permitting shaft 42 to be returned to normal position as shown in Fig. 3, thus causing the contact to be broken between contact springs 35, 37 and 36, 38. The car pilot lamp 62 is thereby extinguished, and the coil 80 is deënergized, which permits spring 81 to return armature 78 and indicating member 73 to normal position. Spring 48 returns shaft 42 to the position shown in Fig. 3, thereby preventing the effective operation of armature 31 to close contacts 35, 37, 36, 38, until such a time as push button 61 shall be operated to draw armature 45 again in contact with core of magnet 50.

It will be seen that when any car has received the signal to stop at a certain landing, which implies that the proper signal has been given at that landing to notify the waiting passenger that this car will stop for him, any other car approaching this landing will be locked out in such manner that it will neither receive the signal to stop at such landing nor in any way affect the landing signal device to confuse the passenger. As soon as the first car leaves this landing, however, the interlocking means will be unlocked momentarily just before it is restored to normal position, so that if another car is at that time within the signaling zone, the armature of the corresponding controlling device may operate to give a signal. But if there is at that time no other car within the signaling zone, the locking device returns to normal locking position and the signals cannot be operated until said device is unlocked by operation of the corresponding push button.

If the operator in one of the cars desires to pass a floor at which a passenger has signaled, without stopping, he may transfer the signal to another car by opening the switch 113 in his car, which will transfer both the car signal and the landing signal to the first car which comes within the signaling zone for that floor.

Various modifications may be made in the construction of the signal devices and the controlling means therefor. As shown in Fig. 12, the landing signals may comprise a pointer 126 moving over a dial 127 and actuated by a solenoid 128 whose core 128′ is connected to the shaft 129 of said pointer.

A modified form of the controlling means for the landing signal and car light circuits is shown in Figs. 13 and 14, comprising solenoids 130 arranged in sets (there being one set for each landing signal and as many solenoids in each set as there are cars to be served) and cores 131 for the respective solenoids, carrying insulating plates 133 which engage spring contacts 134 and 135 to force same against contacts 136 and 137. The contacts 134 and 136 control a car lamp circuit and contacts 135 and 137 control a landing signal circuit.

The interlocking means for the electromagnetic devices above described consist preferably of a plate or strip 142 pivoted at 143 and extending longitudinally over pins 140 on extensions 132 of cones 131 of a single set or row, it being understood that the electro-magnetic devices for the "up" signal for all the cars and for any one landing are arranged in one set or row and the electromagnetic devices for the "down" signal for all the cars for the same landing, are arranged in another set or row. Said interlocking device further comprises an arm or plate 144, which extends downwardly from the plate 142, and is provided with a projection 146, which in this form of the invention extends normally over the top of each

of the armature or core extensions 132, so as to prevent operation thereof, the upper face of this projection 146 being beveled and the said armature or core extension 132 having a beveled shoulder 148 for engaging such beveled face to press the projection 146 aside under certain conditions hereinafter set forth. The locking arm or plate 144 is held in normal position by a spring 149, which causes the said arm or plate 144 to be held in position with the projection 146 extending above the armature or core extension 132 and against the insulating plate 133, and means are provided for withdrawing this interlocking device from such normal position. Said means comprise, for example, an electro-magnet 139 operating directly on said arm or plate 144, which is preferably of steel so that when attracted by said magnet it will be held to the core until forcibly released. When said magnet is energized, it draws the arm or plate 144 to position to withdraw the projection 146 thereon from over the armature or core extension 132, so that the armature or core 131 is then free to be raised by the subsequent operation of coil 130 whenever the latter is energized. Upon energization of any coil 130 after the locking means for the corresponding row of electro magnetic devices has been unlocked by operation of the corresponding magnet 139, the armature or core 131 is raised, causing the pin 140 to engage the plate 142, and causing the projection 146 to be moved inwardly, so as to pass under the shoulder 148 of the core 131 which has been so raised and to extend over the extensions 132 of all of the other electro-magnetic devices in the same row, thereby locking out such other electro-magnetic devices as long as this armature or core remains in raised position. The operation of the controlling and interlocking means just described is similar to that of the corresponding devices shown in Figs. 2 and 3.

In systems including a large number of cars it may be desirable to provide more than one landing signal device at each landing, in which case, as indicated in Fig. 15, the main landing signal wires 103 for each landing are connected by wires 103′ to the corresponding electro-magnetic devices 80 for all the landing signals at that landing, and common return wire 109 is connected by wires 109′, to all such electro-magnetic devices.

In the form of my invention shown in Figs. 16 and 17, the landing signaling operation is under the control of the elevator cars alone, there being no push button at the landings and no signal means for the cars. This system is adapted for use in so called "department store" systems, where all the cars stop at each floor, and it may embody the same form of car operated switch and landing signal devices, and a similar, but somewhat modified form of interlocking means for the signals from the different cars, as above described.

This modification is also shown as applied to two elevator cars 150 and 150′, adapted to operate contact switches 151 and 151′ respectively, each of said contact switches being provided with a middle contact strip 152 and upper and lower rows of contact segments 153 and 154. Upper contact segments 153 are connected by wires 155 to electromagnetic interlocking devices 156, and the said devices for the corresponding contact segments of the different car-operated switches are arranged in rows or sets as above described. Lower contact segments 154 are connected by wires 157 to similarly arranged interlocking devices 158. Each of said interlocking devices 156 and 158 comprises a solenoid coil or magnet 159, and a core 160 adapted to be attracted and raised by the coil upon energization thereof, said core having an extension 161 provided with an insulated plate 162, which is adapted to engage contact spring 163, and force it into contact with contact spring 164 when core 160 is lifted. An interlocking member 165 having a substantially horizontal arm 166 and a substantially vertical arm 167, is pivoted at 168 and extends across all the solenoids or coils 159 of any one set or row. Arm 167 is provided with a projection 169, the upper face of which is beveled as indicated at 170, and extension 161 has a beveled shoulder 161′ adapted to engage said beveled face on downward movement of core 160. A spring 172 normally holds projection 169 away from over extension 161. Core 160 is further provided with a pin 173, adapted to strike arm 166 when the core is raised.

The contact springs 163 for any one set or row of coils 159 are connected by a common wire 175 to the solenoid coil 176 of the corresponding landing signal device 177. Said coils 176 are connected to wire 178, from which wires 179 and 179′ lead to taps 180 and 180′ in the secondary windings of transformers 181 and 181′, said wires being adapted to receive currents of different strength from said transformers. The supply circuit connections are otherwise the same as in the other form of the invention.

In this form of the invention, a car for example, approaching a landing will, without being signaled from the landing, operate the corresponding car-operated switch 151 so as to close a circuit through the corresponding coil 159. This coil will then attract and raise its core 160 so as to cause the insulated plate 162 to force contact spring 163 into contact with contact spring 164, thereby operating the corresponding landing signal device 177 in the manner described above.

At the same time pin 173 strikes arm 166 of member 165 and causes the projection 169

on arm 167 of said member to move to position under the shoulder 161′ of the raised core, but over the extensions 161 on the other cores, thereby locking them out of operation as long as that coil is energized. When the car has passed this floor, the car-operated switch is operated so as to break the current through the coil 159 and deënergize the same, thereby permitting core 160 to fall to normal position and to break contact between contact springs 163 and 164. The landing signal is thus returned to normal or non-signaling position. Suitable means 185 are provided to limit the return movement of member 165, which is returned to non-locking position, through action of spring 172 on the receding of extension member 173 when said coil 159 is deënergized.

With this system the cars stop at all landings without signal from the waiting passenger. If a car already has assumed control of the signal at a landing, the landing signal will not be affected by the approach of another car coming within the signal zone, the same being automatically locked out by the interlocking means, but the control of the signal by the second car will be withheld until the first car has left this landing and then the landing signal will become operative under control of the second car, thereby indicating to the waiting passengers, the car that will serve them. It is self evident that the waiting passengers will have presented to them signals but for one car traveling in each direction at any one time thereby eliminating the confusion arising in the indication of more than one car. In this case, as in the push button system, more than one signal may be presented at each landing, as described in connection with Fig. 15; that is to say, I contemplate under certain conditions multiple signals may be used in case of a number of cars in a bank, carrying out the idea as shown in Fig. 15.

As shown in Fig. 18, an equivalent interlocking effect may be produced by a slight variation in the form of the means shown in Figs. 2 and 3, the interlock shaft 42 and its operating means being similar to what is shown in those figures, except that the restoring spring 48′ is in this case so placed as to draw the shaft to position with the groove 44 therein opposite the lower portions of the armatures 31, so that all of the controlling devices are normally in operative condition. Operation of any one of the armatures 31 by its electromagnet 30 will turn the shaft 42 by engagement of said armature with the rear wall of the groove 44, so as to bring the ungrooved part of the shaft opposite the other armature or armatures and interlock the other controlling devices against movement.

With either of the forms of the invention above described, the interlocking means prevents interference or confusion of signals, by reason of a plurality of cars approaching any one landing about the same time and controlling means for the signal circuits from any car which is thus locked out from the control are held or maintained in reserve until the first car to take hold of the landing signal has passed the landing, so that if the operator in said first car neglects or intentionally omits the stop at the landing, the connection shall be maintained by the interlocking means in such condition that as soon as said first car has passed the signaling zone causing the circuit through the car-operated switch to be opened, the interlocking means being then released, will restore the other landing signal circuits to coöperative relation with the other cars so that the signal will be automatically transferred by the operation of the interlocking means, to the next succeeding car irrespective of the opening of the transfer button by the operator.

It will be understood that any suitable circuit closing means may be used at the landings for control of the circuits, and that the term "push button" is herein used as including any manually operated circuit closing device. The electromagnetic devices for controlling the landing signal circuits constitute selective signal transmitters, as they send selective signals consisting of currents of different strength through the landing signals.

What I claim is:

1. In an elevator signal system, a plurality of car-operated switches, corresponding to different cars, visual signal devices at the respective landings, each signal device being adapted to be variantly operated to display different signals corresponding to different cars, and a signal operating circuit for the signal device at each landing, for each direction of movement of a car approaching said landing, the respective operating circuits being controlled by said car-operated switches to operate the signal device at any landing as the car is approaching such landing, said operating circuits including energizing means which are differentiated for different cars, so that the operation of such signal device is varied according to the car which is in control thereof.

2. In an elevator signal system, a plurality of signal devices at different landings, each comprising an electrically controlled member adapted to display different signals corresponding to different cars, and means comprising a single controlling circuit for each landing signal means for each direction of movement of a car approaching said landing controlled by the motion of different cars for sending differentiated currents in said controlling circuit to operate each of said signals variantly.

3. In an elevator signal system, a visual signal device at a landing adapted to display different signals corresponding to different cars, a single signal circuit leading to the signal device at said landing for each direction of movement of a car approaching said landing and car-operated means for controlling said signal circuit to operate said signal device variantly to display different signals under control of different cars.

4. In an elevator signal system, a signal device at a landing adapted to display different signals when energized by currents of different strength, and means operated by different cars to transmit currents of different strength to said signal means for variant operation thereof by different cars.

5. In an elevator signal system, a visual signal device at a landing, adapted to display different signals corresponding to different cars, and provided with electrical operating means to move said signal means to different extent by the operation of currents of different strength, a source of current having different taps of different potential difference, a plurality of car-operated switches, and a circuit including said electrical operating means and having branches connected respectively to said taps of different potential difference and controlled respectively by said car-operated switches.

6. In an elevator signal system, a plurality of landing signal devices adapted to give visual indications corresponding to different cars and a single circuit controlling each landing signal for each direction of movement of a car approaching said landing, means operated by a plurality of cars and including electric circuits for controlling said single circuit to operate said signal devices variantly under the control of different cars.

7. In an elevator signal system, a landing signal means movable to different positions to display signals corresponding to different cars, means responsive to currents of different strength to move said signal means to such different positions, and a plurality of car-operated switches adapted for operation by different cars, and circuit connections controlled by the respective car-operated switches for transmitting currents of different strength through the operating means for said signal means.

8. An elevator signal system, comprising car-operated switches, circuits controlled thereby and including electromagnetic controlling means, landing signals each provided with operating electrical connections, and circuit means controlled by the electromagnetic controlling means corresponding to different cars for supplying currents of different strength to the operating connections for any landing signal.

9. In an elevator signal system, a single indicator for a plurality of cars traveling in the same direction, a single circuit for the operation of said indicator, said indicator being provided with marks for indicating different cars and car operated means for controlling said circuit for variant operation of said indicator by different cars.

10. In an elevator signal system, a landing signal means movable to different positions to display signals corresponding to different cars, means responsive to currents of different strength to move said signal means to such different positions and car operated means corresponding to different cars for sending currents of different strength through said circuit for variant operation of said signal means by different cars.

11. In an elevator signal system, landing signal means, a plurality of car-operated devices and circuits controlled thereby for operation of said signal means by all of said cars, and interlocking means, operated by the controlling circuit for any car to lock out the other car-operated devices from control of the said signal means.

12. In an elevator signal system, a visual signal means at a landing, a plurality of car-operated devices and circuits controlled thereby for variantly controlling said signal means by the operation of different car-operated devices, means controlled by the operation of any of the said car-operated devices for locking out the other car-operated devices from control of the landing signal, and means for holding the signal circuits for said other car-operated devices in condition to be put into operative relation with the landing signal means when the interlocking means is released.

13. In an elevator signal system, a visual signal device at a landing, a plurality of car-operated switches and electric circuits controlled thereby and including electrical means for operation of said visual signal means variantly under control of the different car-operated switches, said circuits also including interlocking means for locking out the other signal controlling circuits upon operation of any one of said circuits, by operation of a car-operated switch.

14. In an elevator signal system, visual signal devices at the landings, a plurality of car-operated switches, circuits controlled thereby and including electromagnetic devices, circuits controlled by said electromagnetic devices and including said visual means at the landings, means controlled by the operation of an electromagnetic device by any car-operated switch, for locking out the electromagnetic devices for the other car-operated switches while the first of said switches to be operated is still in operating condition.

15. An elevator signal system compris-

ing a plurality of landing signals at different landings, car-operated switches, circuits controlled respectively by said switches, each of said circuits including an electromagnetic controlling device for each landing signal, circuit connections for the respective landing signals controlled by the respective controlling devices, means normally locking said controlling devices from operation, circuits including landing circuit closers and means controlled thereby for moving said locking means to permit operation of any of said electromagnetic controlling devices.

16. In an elevator signal system according to claim 15, push-buttons at the landings, and circuits for said push-buttons including means for controlling the operation of said controlling devices.

17. In an elevator signal system according to claim 16, means for normally locking the controlling devices from operation, and adapted to be unlocked by operation of the push-button circuits.

18. An elevator signal system, comprising a plurality of landing signals, a plurality of car-operated switches corresponding to different cars, a plurality of sets of controlling devices, the number of sets corresponding to the number of landing signals and the number of controlling devices in each set corresponding to the number of cars, circuit connections from each car-operated switch to a controlling device in each set, and operating circuits for the landing signals including contacts controlled by all of the controlling devices in the corresponding set.

19. In an elevator signal system according to claim 18, means controlled by the several controlling devices of each set to impress different electromotive forces on the corresponding landing signal circuit, to produce a different operation of the landing signal by the operation of controlling devices corresponding to different cars.

20. In an elevator signal system according to claim 18, push-buttons corresponding to the landing signals, and circuits controlled by said push-buttons and including means for controlling the operativeness of all the controlling devices for the corresponding set.

21. An elevator signal system according to claim 20, in which the said controlling devices for the landing signal circuits are normally locked, and in which the operation of the push-button circuits unlocks the controlling devices of the corresponding set, and the operation of any of the controlling devices of such set interlocks all the other controlling devices of such set from operation.

22. In an elevator signal system, landing signals, a car signal, operating circuits for said signals, and electromagnetic controlling devices each provided with contacts controlled thereby and included in the car signal circuit and with contacts controlled thereby and included in a landing signal circuit.

23. In an elevator signal system according to claim 22, a car-operated switch and circuit means controlled thereby for operation of said controlling devices, and push-buttons corresponding to the landing signals and circuits controlled thereby and including means for control of the operation of said controlling devices.

24. An elevator signal system comprising a plurality of landing signals, a plurality of car-operated switches, a set of controlling devices for each landing signal, each set including controlling devices connected for control by the different car-operated switches, circuits controlled by the respective controlling devices for operation of the respective landing signals, push-buttons corresponding to the landing signals, and circuits controlled by said push-buttons and including means for unlocking the controlling devices of the corresponding set.

25. In an elevator signal system, a plurality of signal controlling devices, car operated switches and landing circuit closers and circuit means controlled thereby for operating said signal controlling devices, circuit means controlled by said signal controlling devices for sending selective signals, and interlocking means for locking any unoperated signal controlling device from operation when any one of said controlling devices is operated.

26. In an elevator signal system, the combination with car signal and landing signal circuits, of a plurality of car-controlled devices for controlling said circuits, and provided with interlocking means operated by the first car-controlled device to come into operation to prevent operation of the signal circuits by any other car-controlled device.

27. In an elevator signal system, a plurality of car signals in different cars and controlling circuits therefor including means controlled by the movement of the cars, and provided with means for operating the signal of the first car to come into position to receive the signal and to prevent cars subsequently coming into such position from receiving the signal.

28. In an elevator signal system, a single landing signal for all cars traveling in one direction and adapted for operation by currents of different strength to give indications corresponding to different cars, a single operating circuit therefor, signal controlling means and circuits controlled thereby for sending currents of different strength through said signal, and interlocking means for said signal controlling means to pre-

vent operation of said signal by more than one of said controlling means at a time.

29. In an elevator signal system, a plurality of cars, a plurality of devices corresponding to different floors for transmitting selective signals, landing signal circuits connected to all of said transmitting devices and controlled thereby and comprising a circuit for each landing, a single signal receiving means in each of said circuits adapted to selectively receive signals from all of said transmitting devices, and to give visual signals corresponding to different cars.

30. In an elevator signal system according to claim 29, interlocking means for preventing control of a landing signal circuit by more than one of said transmitting devices at a time.

31. In an elevator signal system according to claim 30, push-button circuits including push-buttons at the landings and including means for control of said interlocking means to unlock the signal transmitting devices for a landing corresponding to an operated push-button.

32. In an elevator signal system, a plurality of signal transmitting devices controlled by the operation of different cars, a signal circuit for each floor including a single signal receiving means adapted to give visual signals, each of said signal circuits being adapted to receive selective signals from all of said transmitting devices and to deliver said selective signals to a certain one of said signal receiving means.

33. In an elevator signal system according to claim 32, interlocking means for preventing control of a landing signal circuit by more than one of said transmitting devices at a time.

34. In an elevator signal system according to claim 33, push-button circuits including push-buttons at the landings and including means for control of said interlocking means to unlock the signal transmitting devices for a landing corresponding to an operated push-button.

In testimony whereof I have hereunto set my hand, at Los Angeles, California, this 2nd day of April, 1917.

ROBERT H. GAYLORD.